This is a digital copy of a book that was preserved for generations on library shelves before it was carefully scanned by Google as part of a project to make the world's books discoverable online.

It has survived long enough for the copyright to expire and the book to enter the public domain. A public domain book is one that was never subject to copyright or whose legal copyright term has expired. Whether a book is in the public domain may vary country to country. Public domain books are our gateways to the past, representing a wealth of history, culture and knowledge that's often difficult to discover.

Marks, notations and other marginalia present in the original volume will appear in this file - a reminder of this book's long journey from the publisher to a library and finally to you.

Usage guidelines

Google is proud to partner with libraries to digitize public domain materials and make them widely accessible. Public domain books belong to the public and we are merely their custodians. Nevertheless, this work is expensive, so in order to keep providing this resource, we have taken steps to prevent abuse by commercial parties, including placing technical restrictions on automated querying.

We also ask that you:

+ *Make non-commercial use of the files* We designed Google Book Search for use by individuals, and we request that you use these files for personal, non-commercial purposes.
+ *Refrain from automated querying* Do not send automated queries of any sort to Google's system: If you are conducting research on machine translation, optical character recognition or other areas where access to a large amount of text is helpful, please contact us. We encourage the use of public domain materials for these purposes and may be able to help.
+ *Maintain attribution* The Google "watermark" you see on each file is essential for informing people about this project and helping them find additional materials through Google Book Search. Please do not remove it.
+ *Keep it legal* Whatever your use, remember that you are responsible for ensuring that what you are doing is legal. Do not assume that just because we believe a book is in the public domain for users in the United States, that the work is also in the public domain for users in other countries. Whether a book is still in copyright varies from country to country, and we can't offer guidance on whether any specific use of any specific book is allowed. Please do not assume that a book's appearance in Google Book Search means it can be used in any manner anywhere in the world. Copyright infringement liability can be quite severe.

About Google Book Search

Google's mission is to organize the world's information and to make it universally accessible and useful. Google Book Search helps readers discover the world's books while helping authors and publishers reach new audiences. You can search through the full text of this book on the web at `http://books.google.com/`

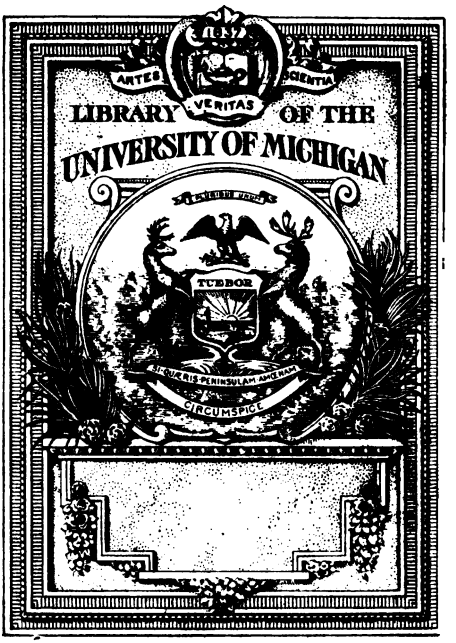
ARTES
VERITAS
SCIENTIA
LIBRARY OF THE
UNIVERSITY OF MICHIGAN
TUEBOR
SI QUAERIS PENINSULAM AMOENAM
CIRCUMSPICE

CTIONS.

XLV.

—

27.

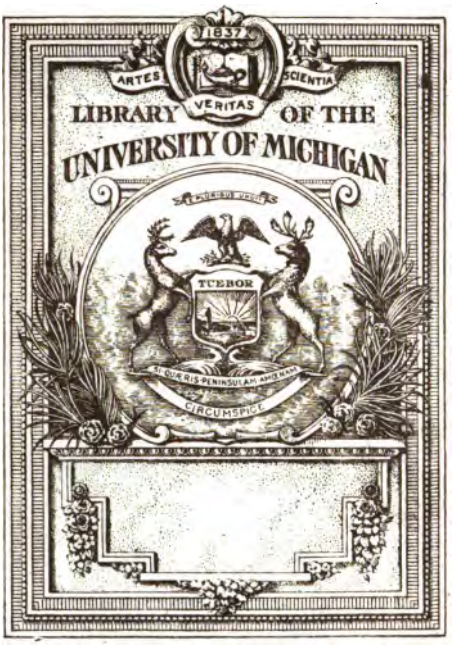
1837
ARTES
VERITAS
SCIENTIA
LIBRARY OF THE
UNIVERSITY OF MICHIGAN
TUEBOR
SI QUAERIS PENINSULAM AMOENAM
CIRCUMSPICE

TRANSACTIONS.

VOL. XLV.

1827.

TRANSACTIONS

OF THE

SOCIETY

INSTITUTED AT LONDON FOR THE

ENCOURAGEMENT OF

ARTS, MANUFACTURES,

AND COMMERCE;

WITH

THE PREMIUMS OFFERED IN THE YEAR

1827.

VOL. XLV.

LONDON:

SOLD BY THE HOUSEKEEPER, AT THE SOCIETY'S HOUSE,

IN THE ADELPHI;

AND BY ALL BOOKSELLERS.

M.DCCC.XXVII.

T. C. Hansard, Pater-noster-row Press.

PREFACE.

THE Committee of Correspondence and Papers, to whom the preparation of their annual Volume is committed by the Society, present the following summary of the Inventions and Improvements rewarded during the last Session, and described in this, the 45th Volume of their Transactions.

In the class of AGRICULTURE, the Silver Ceres Medal has been awarded to PETER GREEN, Esq. of *Crookham*, for his Improved Waggon for conveying Lambs to market.

It is well known that butchers' meat is much affected in flavour, in resistance to putrefaction, and probably, also in wholesomeness, by the state or treatment of the animal for a few days previous to its being killed. The fatigued condition in which many arrive at the market is detrimental alike to the interest of the grower and of the consumer; and, as the butchers of the metropolis will give a higher price for lambs conveyed in carriages than for those that are driven to market, the invention of the best waggon for this purpose is a matter of considerable

06195

importance. Mr. Green's waggon conveys from forty-five to fifty lambs at a time, arranged in two tiers, the animals in each tier being supported from pressing injuriously against each other, by moveable rails or partitions.

The Silver Ceres Medal has been awarded to Mr. W. THOROLD, of *Great Melton*, near *Wymondham*, for his Machine for slicing Turnips.

The hazard which bullocks and other large cattle incur of being choked when fed with entire turnips, has led to the very general practice of slicing or dividing them. The machines employed for this purpose, however effectual, are costly, in the first instance; are liable to be out of repair, and are not moveable from place to place, on account of their bulk. The machine invented by Mr. Thorold is of great simplicity, and consequently cheap; it is not liable to be put out of order, and may be repaired, when necessary, by the village blacksmith or carpenter; and, finally, is so portable, that a man, or a single horse, in a light cart, may convey it from place to place, as convenience may direct. It consists essentially of a grating, the bars of which are knives fixed horizontally in a bench or tressel, and of an iron bar carrying a wooden mallet. The turnip is laid on the knives, and by a smart blow of the mallet is forced through them, being at the same time divided into pieces of convenient size, which are readily discharged, in consequence of the divergent position of the knives. The machine

works very expeditiously, and the most satisfactory testimonials have been laid before the Committee of its performance.

The Large Silver Medal has been awarded to W. WITHERS, Jun. Esq. of *Holt*, in *Norfolk*, for his Experiments on the Effects of Manure on young Plantations of Forest Trees.—That the growth of young plantations is favoured by keeping the ground free from weeds, is generally acknowledged, but, from the want of fair comparative experiments, the amount of advantage is not known with any degree of precision, and is, probably, by most gentlemen, under-rated. Hence carelessness and mistaken economy are too often allowed to interfere so as to prevent, either from the beginning or after the first year, the performance of this very advantageous practice. In like manner, the benefit of marling poor shallow sandy soils, either previous to or soon after planting, has been known and experienced in a few insulated cases. These instances, however, of success do not appear to have attracted much notice, the particulars not having been published, and the formers of such plantations not having instituted any comparative experiments to show the precise benefit derived from the adoption of this practice. Much credit, therefore, is due to Mr. Withers, who for the last sixteen years has been going on with a course of judicious experiments directed to the two points above mentioned. This gentleman appears to have demonstrated, that when

a plantation is made on poor light land, and the trees are neglected during the first four or five years, not only a large proportion of them will die, but those which survive will be so checked in their growth, that no subsequent care will restore them to a state of complete vigour. He therefore attaches great importance to the *early* treatment of young trees, which should be encouraged to establish themselves speedily in their new situation, and to acquire, as rapidly as possible, habits of luxuriant growth. For this purpose, besides paring, and burning, and trenching the soil previous to making the plantation, he spreads on it marl and farm-yard manure, as for a common agricultural crop, and at the same time keeps the surface perfectly free from weeds, by hoeing, till the young trees have completely covered the ground. The progress which they make under this treatment is so extremely rapid, as apparently to justify, in an economical point of view, the extraordinary expenses which attend it. In three years, even oaks and other usually slow-growing forest trees have covered the land, making shoots of three feet in a season, and throwing out roots well qualified by their number and length to derive from the subsoil abundant nourishment, in proportion as the surface becomes exhausted.

The Gold Ceres Medal has been voted to WALTER LONG, Esq. of *Preshaw House*, near *Alton*, *Hants*, for planting one hundred and ninety-five

acres with Forest Trees.—This gentleman's plantations were made in the year 1821, and in the four following years, upon soil of a chalky and gravelly quality. Various difficulties and mortifying failures occurred, but were overcome by patience and sagacious attention.

The Gold Ceres Medal has been awarded to CHARLES CALLIS WESTERN, Esq. M. P. of *Felix Hall, Essex*, for his Long Anglo-Merino Wool.

The wool that may be considered as the characteristic produce of this country is that which has a long staple, and is known by the common name of Long or Combing Wool. It is the material of worsted, and the basis of several of the fabrics made at Norwich. It is grown chiefly in the midland and eastern counties, particularly in Lincoln, Huntingdon, Northampton, and Leicester, and is considered by Mr. Western to depend chiefly on the vigorous and luxuriant state of the animal, arising from the richness of the pasturage, and the care that has been taken to improve the breed for a long series of years.

He considers that his theory is well founded from the well known fact that long-woolled English sheep, when taken to France and other European countries, always degenerate, the wool becoming shorter, brittle, and wiry, in consequence of inferior feeding. Our long-woolled sheep are also remarkable for the fatness of the carcass; and the high

price that is given for well-fed mutton is the principal source to which the farmer looks for his remuneration.

The defects of long wool, as compared with the finer varieties of short wool, are the thickness or coarseness of the fibre, and the harshness of its feel; the manufacturers are, therefore, in their finer fabrics, obliged to intermix with the long wool the softer kinds of short wool, spun silk, and the downy fur of the Canadian Buffalo, the Peruvian Vicugna, and the Cashmeer-shawl Goat.

Mr. Western, from observing the fineness and luxuriance of the Merino fleece, was of opinion, that by care and rich feeding, the wool might be lengthened so as to become fit for the comber without much diminution of its fineness and softness; and, if this were accomplished, at the same time that the carcass was not deteriorated, the result would be a breed of sheep sufficiently profitable to the farmer, and the wool of which would be highly acceptable to the manufacturer. He accordingly instituted a series of experiments with this view, which have turned out very successful, and have also demonstrated a curious physiological fact, that the wool of Anglo-merino sheep, when kept in high condition, will continue growing for two, and even for three, years, the fibres showing no tendency to separate at the end of each year's growth. It appears that the wool obtained by shearing the sheep biennially will be long enough to be combed

without any waste, and will afford a raw article for our manufactures unquestionably better than any of the varieties of long wool now in the market.

The Gold Ceres Medal has been awarded to Mr. C. Poppy, Jun. of *Witnesham*, near *Ipswich*, for his mode of preventing Crops of Turnips from being devoured by the Fly.

Turnips are the basis of that improved mode of husbandry which originated in Norfolk, and has now been adopted in most of the light lands in the kingdom. But a small insect, called the Turnip Fly, destroys the plants on their first coming up, occasioning large bare spaces in the fields, and not unfrequently carrying off the entire crop. When this happens at so late a period of the year as to preclude the possibility of taking the chance of a subsequent sowing, the plans of the farmer are deranged, and he is often obliged, at a great sacrifice, to dispose of part of his live-stock for want of food for them.

The Society have for several years offered a premium for the best mode of protecting turnip crops from this their natural enemy; and Mr. Poppy's plan, corroborated as it is by actual experiment, and involving but little expense, appears well worthy of more extended trial, and, it is hoped, of general adoption.

When two kinds of turnip are sown in the same field, those which are the most tender and succulent will chiefly suffer from the fly. A like distinc-

tion will be observed if only one kind is sown, but the seed is unequally scattered; those plants that rise in clusters protect one another from the sun and air, and offer a more agreeable food to the fly than those which come up at greater respective distances. Reasoning from these well-known facts, Mr. Poppy was induced to drill four acres on his own farm, employing one pint of Swedish turnip seed per acre for those rows intended to stand for a crop, and half a peck of common turnip seed on the rows alternating with the former, and intended to attract the fly from them. The result was, that the thin-sown Swedish turnips were not sensibly injured by the fly, while the thick-sown ones were quite black with swarms of this insect. After the Swedish turnips had got into the rough leaf, the danger from the fly being over, the rows of common turnips were ploughed up, and the crop being afterwards managed in the usual way, turned out very good, whilst all the other turnips in the parish, sown at the same time in the usual manner, totally failed. Another experiment was made in the neighbourhood of Blandford, in Dorsetshire, the result of which was the only good crop of turnips obtained during the last year in that part of the country.

In the class of MECHANICS, a Large Silver Medal has been voted to Mr. W. J. Hood, first lieutenant of H. M. S. Hyperion, for an Improved Ice Saw.—The vessels employed in the Greenland fishery, and

others that navigate the Polar seas, are furnished with large saws for the purpose of cutting through the ice, and thus relieving the ship when frozen up. The lives of the crew not unfrequently depend on the expedition with which a passage can be cut so as to disengage the vessel before the further accumulation of ice renders it an impossible undertaking. The saw, with a weight suspended to it, is introduced by means of a hole broken through the ice, and is suspended by a rope passed over a pulley fixed to a triangle. A party of a dozen or more men run out and back again with the rope, and thus move the saw up and down, till it has cut its way so far as to hang perpendicularly from the pulley. The triangle is then removed a foot or two farther, and the sawing recommences, the services of nearly the whole of the crew being required in this laborious undertaking. Lieutenant Hood proposes to suspend the saw by a light sledge, and to work it by the power of only two or three men, at the end of a lever: a bar called a propeller is fixed on the lever between the fulcrum and the saw, the other end resting on the surface of the ice, and so adjusted that each motion of the lever shall produce a cut of a given length, and at the same time, by means of the propeller, push the sledge on so that the teeth of the saw shall be always in contact with the ice.

A Large Silver Medal has been voted to Mr.

JOSEPH HILLMAN, of *Deptford*, for his Sliding Rudder, to prevent injury to this part when a vessel tails on a sand bank, or strikes the ground when riding at anchor in a heavy gale with a rolling sea.—A similar Medal has been voted to Mr. J. WEEKES, of the *Royal Dock-yard, Chatham*, for his mode of preventing the Blocks, technically called Dead Eyes, to which the Shrouds are fastened, from being torn away when the Mast goes overboard; and a Silver Medal has also been voted to Mr. JAMES HOOKEY, Midshipman in the R. N. for his Improved Ship's Log.—Two Silver Vulcan Medals have also been given, the one to Mr. BOTHWAY, Gunner R. N. for his Improved Cat-block, and the other to Mr. J. B. KOOYSTRA, Lieutenant R. N. for his mode of Securing the Stopper of a Chain Cable.

The real value of these inventions can only be adequately estimated by persons conversant with shipping, and especially with the naval service; but, as some of them have met with the approbation of the Navy Board, as respectable certificates have been produced in favour of others, and as all of them are invented by persons professionally familiar with nautical affairs, the Society have thought themselves justified in recommending them by their rewards to the attention of the public.

The Large Silver Medal has been voted to J. HAWKS, Esq. of *Upper Thames-street*, for his Re-

volving Light for Steam-boats.—A fatal accident that occurred on the coast of Scotland, by two steam-vessels running aboard of each other, suggested to Mr. Hawks the necessity of distinguishing this class of shipping from sailing vessels when under way at night. He proposes that a frame like two arms of a windmill should be fixed on a pivot projecting from the chimney, in such a manner as to receive a movement of rotation from any convenient part of the steam-engine. At the end of each arm is suspended a cylindrical lanthorn, so that the apparatus will display two opposite lights moving round a centre, and describing a circle the plane of which is at right angles to a line drawn from head to stern of the vessel.

The Gold Vulcan Medal has been awarded to ROBERT COWEN, Esq. of *Carlisle*, for his Adaptation of a Syphon to Draining a Stone Quarry.

Theoretically speaking, water will rise in the short leg of a syphon to a height equal to the atmospheric pressure, or about thirty-two feet, and therefore pits and quarries so situated as to have a sufficient outfall might, it would seem, be drained by means of a syphon, so far that the water shall not rise higher in them than within thirty-two feet of the surface. But when this plan is attempted to be reduced to practice, it will be found, that a syphon will not long continue to act, if it has to raise water more than twelve or fourteen feet. The reason of this is, that the air which all common

water contains begins to separate from that fluid as it rises under diminished pressure through the short leg of the syphon, till at length the angle of the syphon is filled with air, and the current of water is interrupted. Mr. Cowen places a box at the upper angle of the syphon, into which all the air separated from the water rises, and the application of a forcing pump for a few minutes once or twice a day drives the air out of the box into the atmosphere. By this means the utility of an extremely simple and cheap machine is much extended, and it will doubtless be applied in many situations to draining stone and slate quarries, with the same complete success which has attended its use by Mr. Cowen.

The Large Silver Medal has been voted to Mr. J. P. PAINE, 39, *High-street, Bloomsbury*, for his Mode of Illuminating Church and other Turret Clocks.

The habits of the people of this Country, together with the shortness of the day in the Winter season, cause a large proportion of the population in the metropolis, and other large towns, to be out of doors during many hours of darkness. For the accommodation of such, the streets and roads have been lighted, and attempts have been made with more or less success, to illuminate the dial-plates of church and other public clocks. In some cases, this has been done by throwing a strong light from a reflector on the surface of the dial; in others,

the plan resorted to has been, to form the dial-plate of ground-glass, to paint the figures thereupon in opake colours, and to inclose behind the plate a powerful lamp, so as to render it sufficiently distinct to passers-by.

Mr. Paine has made his dial-plate of transparent red glass, and the figures of cast metal; he has also avoided all junctures in the glass which might interfere with a clear view of the hands, and has thus obtained a more distinctly visible dial-plate than any others that have hitherto been exhibited. The light employed is a powerful jet of coal-gas, and the cock of the gas-pipe is so connected with the train of the clock, that it will nearly close at any given hour in the morning, and continue in that state till a given hour in the evening, when the pipe will be again completely open, and a full light will be produced. There is, therefore, no necessity to send a man up to the clock twice a day, in order to extinguish and to light the lamp, for the flame is perpetual; only, during the day, when it is not wanted, it is greatly reduced, in order to avoid unnecessary expenditure of gas. Two of the dials of St. Giles's Church have been fitted up in the above manner by Mr. Paine.

The Silver Vulcan Medal has been awarded to Mr. G. Smart, of *Lambeth*, for his wrought Iron Trussed Girder. The girder consists of a bow or arch of wrought iron, with a string of the same material, and blocks of well-seasoned hard wood

are inserted between the bow and string, in order to prevent the arch from being crushed in by any general or partial strain.

The Large Silver Medal has been awarded to Mr. JAMES PERKINS, of *Stanstead*, for a Cap for a Malt-kiln. The vapour that arises from malt, when drying on the kiln, is discharged into the air through a hood or cowl, which turns round by means of a vane, so that the opening shall always be in the opposite direction to that from which the wind blows. But the aperture of the common cowl always remains of the same magnitude, and therefore the draft through the fire admits of no accurate regulation. Mr. Perkins's cap possesses all the advantages of the cowl, with the additional one of regulating the opening, and consequently the draft. Malt-houses are frequently set on fire in making high-dried malt, because the fire is not perfectly manageable. The cap invented by Mr. Perkins obviates this very serious inconvenience, and has been tried for some months by Mr. Felix Booth, the distiller, with complete success.

The Silver Vulcan Medal has been awarded to W. J. CHARLTON, Esq. of the *War-office*, for an improved Closet to keep Papers in.

The accumulation of documents in the public offices, especially in that to which Mr. Charlton belongs, is enormous, and the mass of those that are required to be in constant readiness for reference, on

various occasions, is so great, as to require more space than can well be spared. The ingenuity of Mr. Charlton has been very laudably and successfully exerted in the contrivance of closets or presses with swinging shelves, capable of receiving a great multitude of papers, and of displaying them, when required, in a very convenient manner. The plan has been adopted in the War-office, and in some other public departments, and will be found equally advantageous in the counting-houses of Merchants, the offices of Solicitors, private libraries, and cabinets of Natural History.

The Large Silver Medal has been voted to W. CAFFIN, Esq. of *Woolwich*, for a very simple, ingenious, and well-contrived machine, which, according to the scale on which it is made, may be applied to filling cartridges, its original destination, or to measuring grain, seeds, and all other articles that are estimated by the levelled or *struck* measure.

The sum of Five Pounds has been voted to Mr. JONAS THURRELL, of *Camden Town*, for an improvement in that variety of mangle in which the alternate motion of the box is produced by the continuous movement of the handle in the same direction. The improvement consists in the simplicity of the mechanism by which this conversion of motion is effected.

The sum of Five Pounds has also been given to

Mr. ADAM REID, of *Woolwich*, for an improvement in a Compensation Pendulum of his construction, formerly rewarded by the Society. The compensation consists in supporting the weight of the pendulum on a zinc cylinder, which receives the end of the steel rod of the pendulum, and is itself supported on the nut at the bottom of this latter. When, therefore, the steel rod expands downwards by heat, the zinc cylinder expands upwards in the same proportion, provided the relative lengths of the steel and zinc are duly adjusted. The improvement consists in forming an external screw on the top of the zinc cylinder, which fits a hollow screw in the lower part of the weight, and thus allows the relative lengths of the zinc and steel to be accurately adjusted, in case they had not been so at first.

The Silver Vulcan Medal has been voted to Mr. ED. BURN, of *Kirby-street, Hatton-garden*, for his application of a rolling-press, instead of the common process of beating printed sheets, in order to make them quite smooth, previously to their being bound. For this purpose the sheets are made up into packets of two or three, with a leaf of tin plate between each packet, and are then passed once between a pair of heavy iron rollers. The momentary but strong compression which they thus receive, makes the paper quite smooth, and the ink is less likely to set off than it is during the long continued beating which is usually employed for

the same purpose. The saving of time thus occasioned is very great, and the superior degree of compression is such, that a rolled book is reduced to five-sixths of the thickness that the same book would occupy if beaten.

The Silver Vulcan Medal has been voted to Mr. G. MACHIN, of *Wolverhampton*, for his Expanding Key for a Lock.

The Large Silver Medal has been awarded to Mr. J. BOWER, for an improved Lathe Chuck for Engine Turners, which, by means sufficiently simple, but which cannot be described by mere words, is capable of producing right lines and circular arcs of any degree, with a continued instead of an alternate motion of the wheel.

The Silver Vulcan Medal has been awarded to Mr. PACKHAM, of *Maidstone*, for a Self-adjusting Rupture-truss, particularly adapted to the use of those who, from the nature of their occupation, are obliged to raise heavy weights.

The Gold Vulcan Medal has been voted to Mr. G. GIBSON, of Birmingham, who, being himself blind, has invented a set of types, whereby he can write down his thoughts, perform arithmetical operations, and communicate the results of them, not only to those who can see, but to persons labouring under the same severe privation with him-

self. His apparatus consists of a number of cubes, on the top of which are formed, in relief, sufficiently high to be distinguishable by the touch, the figures of the letters, of the numerals, and of other characters that he may have occasion for. On the bottom of each cube, the figure that it bears on the top is represented by needle points, projecting about a tenth of an inch. If, therefore, a piece of paper be laid on a hard flat cushion, and one of the cubes formed as above described be pressed upon it, the points will penetrate the paper, and will form on the underside a visible, and, at the same time, a tangible representation of the figure, by means of the burs or prominences, wherever the points have passed through. The evenness and continuity of the writing are secured by a square frame and guide bars.

Another invention for the use of the blind, to which the Large Silver Medal was awarded, has been sent to the Society by Don Jaime Isern, a gentleman of *Catalonia*, who, like Mr. Gibson, has been blind from his early childhood. This gentleman is a composer of music, and has invented a very ingenious machine, whereby he can write his compositions in the ordinary musical characters.

The Silver Vulcan Medal has been awarded to Mr. W. Thorold, of *Melton*, near *Wymondham*, for an improved application of a Reel to the apparatus for communicating with a stranded vessel,

calculated to deliver the rope more equably, and with less resistance to the shot by which it is carried, than when coiled or faked in the usual manner.

The sum of Five Guineas has been awarded to Mr. J. CALLAGHAN, of *Carlisle-lane, Lambeth*, for his Face-guard for Smelters, and other workers in hot metal. The guard is a kind of veil of wire gauze, which hangs before the face, and may be turned back over the hat when not in use. It is, perhaps, not quite new, as similar contrivances are partially in use in the laboratories of experimental chemists, for the purpose of protecting the eyes from injury by light and heat, when examining the progress of an operation in a powerful furnace. Several members of the Society, proprietors of works in which smelting, forging, and other operations on large masses of hot metal are continually going on, stated it as a general observation, and one which came within their personal knowledge, that the eyes of the workmen engaged in these operations, are very liable to be seriously injured in the course of a few years. The present invention has originated with a person who is himself a workman; and, if the Society's reward should tend to repress that carelessness which is gradually but perpetually inflicting severe and irreparable injury on a highly valuable and meritorious class of the community, it will have been bestowed agreeably both to the spirit and the letter of the Institution.

In the class of CHEMISTRY, two sums of Twenty Pounds each have been severally voted to Mr. G. FIELD, of *Syon-hill-park*, and to Mr. LUNING, of *Apothecaries'-hall*, for their respective methods of freeing lac-varnish from the reddish brown colour which is natural to it, and which precludes its application to pictures, although its hardness, toughness, and little liability to crack, would otherwise render it highly valuable to artists. The Society have for several years offered a premium to the person who should accomplish this object, and have now the pleasure of rewarding two methods almost equally effectual.

Mr. Field dissolves the lac in spirit of wine, and destroys the colour by the repeated and careful addition of chlorine in vapour, and of chloride of potash.

Mr. Luning to a solution of lac in spirit of wine adds animal charcoal with the same result.

The sum of Five Guineas has been voted to Mr. C. CAMERON, of *Glasgow*, for his mode of preparing an Alkaline Ley for the use of the dyers of Turkey red, a beautiful and durable colour for cotton, the receipt for which was in 1761 purchased by the Society for one hundred and fifty pounds, and communicated by them to the public.

In the class of MANUFACTURES, two sums, one of Twenty Guineas, and the other of Ten Guineas, have been awarded to Messrs. MUIR, of *Greenock*,

for their Plat and Hats of British Leghorn, and the second reward of Five Guineas has been voted to Mr. LONG, of *Claydon*, in *Suffolk*, for Fine Plat. These sums form the continuation of a long series of honorary and pecuniary rewards, devoted by the Society to the encouragement of the manufacture of hats and bonnets of straw, platted and knit in the manner of those imported from Leghorn.

It is hardly necessary to repeat what has been said on previous similar occasions, respecting the manufacture of straw plat. It is not at present produced, nor is it likely ever to be produced, by machinery. It remains, therefore, and long may it remain, the sacred patrimony of those who have little else to depend on, in order to eke out the scanty earnings of agricultural labour. It is the peculiar occupation of females and children, carried on in the midst of their families, and remote from the direful contamination of morals which almost always attends the assemblage of young persons in crowded manufactories, however regulated. The Society have long suggested the possibility of retrieving the manufacture of common or Dunstable straw plat, extinguished at the close of the late war by the large importation of a superior fabric from Italy, by imitating with success these products of Italian skill. The first rude attempts were rewarded with liberality; and useful information on the growth of the straw, its bleaching, and its manufacture, were sought, obtained, and published by the Society. Last year produced specimens

which met with a ready sale as real Italian, from the average qualities of which they could not be distinguished; and this year the Society have received specimens which challenge the Italian fabrics to equal competition. The Society may now transfer its funds to other objects, in full confidence that the ladies of England will do justice to their countrywomen.

The Silver Vulcan Medal and Five Guineas have been awarded to Mr. JAMES, of *Lambeth*, for his mode of opening Horn.

In the common process, the horn, after being slit longitudinally, is held over an open fire till sufficiently soft to yield without cracking to the action of screws and wedges, and presses, that are employed in squeezing it flat. The previous heating is a long operation, and one which requires great practice to perform in an effectual manner without singing the thinner parts of the horn. The candidate proposes, and, on a small scale has practised, a more expeditious, safe, and equally effectual method of heating the horn, by putting it into a hot hollow cone of iron, and then compressing it, by driving in an iron plug, heated also.

In the class of COLONIES and TRADE, the Large Gold Medal has been voted to FRANCIS COLLISON, Esq. of the *Cape of Good Hope*, for Wine of superior quality, imported from that Colony.

The Premium was offered to stimulate the attention of the Colonists to the improvement of that article, which the soil and climate of the Cape of Good Hope seems to point out as its most profitable produce. Some hundred pipes have been imported by the house of Collison and Starkey, of quality equal to the sample cask sent to the Society, and which, on examination by wine-merchants and other competent judges, was pronounced to be nearly equal to Teneriffe wine.

With regard to Mr. Hawks's revolving light for steam-boats (see p. xiv), it appears, on subsequent inquiry, that a plan similar to the above, but differing in the mode of securing the vertical position of the lanthorns, was proposed by Mr. DAY, of *Kingsland-crescent*, and was communicated by him to the Editor of the "Register of the Arts and Sciences," in which work it appeared nearly six months previous to the date of Mr. Hawks's communication to the Society. This latter gentleman made the first model of his apparatus while he was residing in Guernsey; and there is every reason to believe that the two plans, though similar, are each original inventions.

CONTENTS.

	Page
PREMIUMS offered in the Session 1827–28	i
List of Officers of the Society	ii
Advertisement to the Public	iii
General notice to Candidates	v
Rewards bestowed by the Society during the Session 1826–27	xxix

AGRICULTURE.

I. Walter Long, Esq., on Planting Forest Trees	1
II. Mr. W. Withers, Jun., on the Management of Plantations of Forest Trees,	19
III. C. C. Western, Esq., on long Anglo-Merino Wool	36
IV. Peter Green, Esq., on a Waggon for conveying live Lambs to Market	45
V. Mr. W. Thorold, on a Machine for Slicing Turnips	47
VI. Mr. Charles Poppy, Jun. on Securing Turnip Crops from Injury by the Fly	54

CHEMISTRY.

I. II. Mr. George Field, and Mr. Henry Luning, on Colourless Lac-Varnish	59
III. Mr. C. Cameron, on Soda-Ley for Dyers	68
IV. J. Houlton, Esq., on Preparing Vegetable Extracts for Medicinal Use	70
V. Captain Bagnold, on Preparing Lime-Juice	72

MECHANICS.

Page

I. Mr. W. Thorold, on an Improved Reel for Captain Manby's Apparatus 75
II. Don Jaime Isern, on an Instrument to enable the Blind to write Music 86
III. Mr. George Gibson, on Types for the use of the Blind 90
IV. W. J. Hood, Esq., on an Ice-Saw 96
V. Mr. James Hookey, on an Improved Log-ship . 99
VI. Mr. J. Weekes, on Securing the Dead-Eyes of a Ship 103
VII. W. Caffin, Esq., on an Instrument for Measuring Grain, &c. 106
VIII. Mr. Joseph Hillman, on a Sliding Rudder . 107
IX. Mr. J. B. Kooystra, on a Stopper for a Chain Cable 109
X. W. J. Charlton, Esq., on a Closet for Official Papers 111
XI. R. Cowen, Esq., on a Draining Syphon . . . 113
XII. Mr. G. Machin, on an Expanding Key for a Lock 123
XIII. Mr. G. Smart, on a Trussed Girder of wrought Iron 125
XIV. Mr. Jonas Thurrell, on a mode of producing the alternate motion of a Mangle Box 127
XV. Mr. W. H. Perkins, on a Cap for a Malt-kiln . 129
XVI. Mr. J. Bothway, on an Improved Cat Block . 131
XVII. J. Hawks, Esq. on a Revolving Light for Steam Boats 136
XVIII. Mr. J. P. Paine, on a mode of Illuminating Public Clocks 139
XIX. Mr. J. Bower, on an Improved Lathe Chuck . 143
XX. Mr. W. Burn, on a Rolling Press for the use of Bookbinders 148
XXI. Mr. A. Reid, on a Compensation Pendulum . 150

Page

XXII. Mr. J. Callaghan, on a Face-guard for Smelters 152

XXIII. Mr. J. Packham, on a Self-adjusting Truss for Ruptures, and Bandage for Prolapsus Ani . . . 154

XXIV. Mr. W. Wynn, on certain Improvements in Turret Clocks 157

MANUFACTURES.

I. II. III. Messrs. Muir, and Mr. J. Long, for Hats of British Leghorn, and Fine Plat 159

IV. Mr. J. James, on opening Horn . . . 164

COLONIES AND TRADE.

Francis Collison, Esq., for Wine from the Cape of Good Hope 166

LIST OF PLATES.

1. Mr. Thorold's Reel.
   Mr. Thorold's Turnip Slicer.
2. Mr. Thurrell's Mangle.
   Mr. Green's Lamb-Waggon.
   Mr. Perkins's Cap for a Malt-kiln.
3. M. Isern's Instrument to enable the Blind to Write Music.
4. Mr. Gibson's Types for the Blind.
5. Lieut. Hood's Ice-saw.
6. Mr. Bothway's Cat-block.
   Mr. Hawks's Revolving Light for Steam-boats.
   Mr. Hookey's Ships' Log.
   Mr. Weeks's mode of Securing the Dead Eyes of a Ship.
7. Mr. Machin's Expanding Key and Lock.
   Mr. Caffin's Instrument for Filling Cartridges.
8. Mr. Paine's Illuminated Clock.
   Mr. Packham's Rupture Truss.
9. Mr. Bower's Chuck.
10. Mr. Cowen's Syphon for Draining.

SOCIETY

FOR THE

ENCOURAGEMENT

OF

Arts, Manufactures, and Commerce.

PREMIUMS

OFFERED IN THE SESSION

1827—1828.

LONDON:

PRINTED BY ORDER OF THE SOCIETY,

FOR GRATUITOUS DISTRIBUTION;

AND MAY BE HAD, BY APPLICATION, AT THEIR HOUSE IN THE ADELPHI.

T. Woodfall, Printer, Vincent Square, Westminster.

1827.

A LIST OF THE OFFICERS OF THE SOCIETY.

PRESIDENT,

HIS ROYAL HIGHNESS PRINCE AUGUSTUS FREDERICK DUKE OF SUSSEX, K.G., &c. &c.

VICE PRESIDENTS.

JOHN Duke of BEDFORD, F.S.A.
HUGH Duke of NORTHUMBERLAND, F.R.S. and F.S.A.
GEORGE GRANVILLE LEVESON Marquis of STAFFORD, K.G.
JACOB PLEYDELL Earl of RADNOR, F.R.S. F.S.A.
ROBERT Earl of LIVERPOOL, K.G. F.R.S.
CHARLES Earl of ROMNEY, F.R.S.

JOHN CHRISTIAN CURWEN, Esq. M.P.
RICHARD WILSON, Esq. F.S.A.
JOSEPH HUME, Esq. M.P. F.R.S.
WILLIAM TOOKE, Esq. F.R.S.
THOMAS HOBLYN, Esq. F.R.S. F.H.S.
Sir T. DYKE ACLAND, Bart. M.P.
The Hon. G. A. ELLIS, M.P. F.R.S. F.S.A.
DAVID POLLOCK, Esq.
WILLIAM Viscount LOWTHER, F.S.A.
DANIEL MOORE, Esq. F.R.S. F.S.A. F.L.S. F.G.S.

CHAIRMEN OF COMMITTEES.

Accounts.

WILLIAM LUMLEY, Esq.
W. H. BODKIN, Esq.

Correspondence and Papers.

GEORGE MOORE, Esq. F.S.A. F.L.S.
RICHARD HORSMAN SOLLY, Esq. F.R.S. F.S.A. F.H.S. &c.

Polite Arts.

WILLIAM BROCKEDON, Esq.
EDWARD QUIN, Esq.

Agriculture.

LAYTON COOKE, Esq.
JAMES HARRISON, Esq. F.H.S.

Manufactures.

THOMAS WINKWORTH, Esq.
GEORGE COTTAM, Esq.

Mechanics.

TIMOTHY BRAMAH, Esq. F.H.S.
JAMES JONES, Esq.

Chemistry.

MICHAEL FARADAY, Esq. F.R.S. F.G.S.
HENRY HENNELL, Esq.

Colonies and Trade.

JOHN MACARTHUR, Esq.
GEORGE TWINING, Esq.

Miscellaneous Matters.

JAMES SAVAGE, Esq.
EDWARD BINYON, Esq.

Secretary, ARTHUR AIKIN, Esq. F.L.S. F.G.S.
Assistant-Secretary, Mr. THOMAS WOODFALL.
Housekeeper, Miss A. B. COCKINGS.
Collector, Mr. JOSEPH CHATER.

ADVERTISEMENT TO THE PUBLIC.

THE chief object of the Society is to promote the Arts, Manufactures, and Commerce of this Kingdom, by giving honorary or pecuniary Rewards, as may be best adapted to the case, for the communication to the Society, and through the Society to the public, of all such useful Inventions, Discoveries, and Improvements, (whether specified in these Premiums or not,) as tend to that purpose: in pursuance of this plan, the Society have already expended upwards of a *Hundred Thousand Pounds*, derived from voluntary subscriptions and legacies.

The meetings of the Society are held every Wednesday, at seven o'clock in the evening, from the first Wednesday in November to the second Wednesday in June. The committees meet on other evenings in the week during the session, for the purpose of taking into consideration the subjects referred to them by the Society. A person desirous of becoming a member of the Society, may be proposed according to the following form, which must be signed by three members of the Society, and delivered in to the Secretary:

A. B. [*Trade, profession, or designation of the Candidate,*] proposed as a Member of the Society for the Encouragement of Arts, Manufactures, and Commerce, by
C. D.
E. F.
[*Date.*] G. H.

Peers of the realm, or lords of parliament, are, on their being proposed, immediately ballotted for; the names of other persons proposed to become members are read by the Secretary to the Society, and are then inserted in lists which are hung up in the Society's room; they are ballotted for at the second following ordinary meeting. In both cases, if two-thirds of the members then voting ballot in their favour, they are deemed perpetual members upon payment of not less than twenty guineas in one sum, or subscribing members upon payment of any sum not less than two guineas annually.

Ladies are eligible as members of the Society, and alone are entitled to vote by proxy at elections, through the medium of any gentleman who is a member, on his producing a written authority for the same.

Members are entitled to vote and assist in all the business of the Society and of the several committees. They have also the privilege of recommending two persons as visitors at the meetings of the Society; and, by addressing a note to the housekeeper, of introducing their friends on any week day, except Wednesday, between the hours of ten and two, to examine the various models, machines, and pro-

ductions, in different branches of arts, manufactures, and commerce, for which rewards have been bestowed; also to inspect the magnificent series of moral and historical paintings, executed by the late J. Barry, Esq. which, with some valuable busts, statues, portraits, &c. decorate the public rooms of the Society.

Members have the use of the Society's library, which is valuable, and annually increasing by the purchase and donation of scientific and useful books, and of engravings. Contributions from members and others, in augmentation of the library, and of the collection of maps and prints, will be thankfully received, and duly acknowledged in the annual volume of the Society's Transactions, to a copy of which every member is entitled.

☞ To persons inclined to leave a sum of money to this Society by will, the following form is offered for that purpose:

> ITEM.—I give and bequeath to A. B. and C. D. the sum of upon condition, and to the intent that they, or one of them, do pay the same to the collector, for the time being, of a Society in London, who now call themselves *the Society for the Encouragement of Arts, Manufactures, and Commerce;* which said sum of I will and desire may be paid out of my personal estate, and applied towards carrying on the laudable designs of the Society.

The Society desire it to be clearly understood, that, as a body, they are not responsible for any opinion or representation of facts contained in their volumes. And the public are requested to guard against imposition from persons advertising as having patents for articles rewarded by the Society; they are also cautioned against purchasing articles sold under the pretended sanction of the Society's name.

The Society have lately published the 44th volume of their Transactions, which may be had by members, on application to the housekeeper. Complete sets of their Transactions, or any single volume, may be purchased at the Society's house; where may be had also,

An *Analytical Index of the first twenty-five volumes* of the Transactions to the termination of the session, June, 1807, price 1*s*.

Ditto continued to the end of the 40th volume, price 1*s*.

A catalogue of books in the Society's library, price 1*s*.

A description of Mr. Barry's paintings in the great room of the Society, *gratis*.

All communications are to be made by letter, addressed to *Arthur Aikin*, Esq. the Secretary, at the Society of Arts, &c. Adelphi, London; and, where articles are sent by sea for the Society, the bills of lading are to be addressed to the care of *William Vaughan*, Esq. 70, Fenchurch-street, London, who has undertaken to receive them for the Society.

GENERAL NOTICE TO CANDIDATES.

The great object of the Society, in rewarding individuals, is to draw forth and give currency to those inventions and improvements which are likely to benefit the public at large. Candidates are, therefore, requested to observe, that if the means by which the respective objects are effected require an expense or trouble too great for general purposes, the Society will not consider themselves bound to give the offered reward; but though they expressly reserve the power, in all cases, of giving such part only of any premium as the performance shall be adjudged to deserve, or of withholding the whole if there be no merit, yet the candidates may be assured the Society will always judge liberally of their several claims.

The Society by no means restrict their liberality to the subjects for which premiums are specially offered, but will take into consideration, and will reward by a bounty proportioned to its merit, any communication, the subject of which is of a practical nature, and calculated to promote the public good.

All communications are to be made by letter, addressed to the secretary; and are to contain full and particular details, according to the nature of the subject, as well as accurate descriptions of such drawings and models as form part of the communication; the models to be sent *carriage paid.*

In those cases in which certificates are required to be produced in claim of premiums, they should be expressed, as nearly as possible, in the words of the conditions attached to the respective premiums, and be signed by disinterested persons, who have a positive knowledge of the facts stated.

The premiums are designed for the United Kingdom, unless expressly mentioned to the contrary: but no claim will be attended to unless the previous conditions have been fully complied with.

No person shall receive any premium, bounty, or encouragement, from the Society, for any matter for which he has obtained any premium or reward from any other society, or for which he has obtained, or purposes to obtain a patent: it being a condition stipulated with every candidate, that all articles rewarded by the Society shall be freely given up to the public, to be made or manufactured by any person whomsoever.

All models, the production of which is attached as a condition to any premium, shall, upon delivery of such premium, remain the property of the Society.

Where premiums or bounties are obtained in consequence of specimens produced, the Society will retain such part of those specimens as they may judge necessary, making a reasonable allowance for the same.

No member of this Society shall be a candidate for, or entitled to receive, any premium, bounty, or reward whatsoever, except the honorary medals of the Society.

No candidate, not a member, shall be present at any meeting of the Society or committees, or be admitted at the Society's rooms, after having delivered in his claims, until such claims are adjudged, unless summoned by the committee.

A candidate for a premium, or a person applying for a bounty, being detected in any attempt to impose upon the Society, shall forfeit such premium or bounty, and be deemed incapable of obtaining any for the future.

The consideration of the claims for the premiums offered in the present list will take place during the session of the Society commencing on Wednesday the seventh of November, 1827. The several candidates and claimants, to whom the Society shall adjudge premiums or bounties, are to attend on the last Wednesday in May, or such other day as the Society shall appoint, to receive the same; and before that time no premium or bounty will be delivered, except to those who are about to leave the kingdom.

In cases where the Society may think fit to admit excuses for not attending in person, deputies may be substituted to receive the rewards, provided such deputies are either members of the Society, or superior officers thereof.

CLASS OF AGRICULTURE*,

INCLUDING

PLANTING, GARDENING, AND EVERY BRANCH OF RURAL ECONOMY.

For useful communications on any of these subjects the Society will give Gold or Silver Medals, or pecuniary Rewards, varying from Five to Fifty Pounds, according to circumstances: and it is particularly requested that such communications may be sent in not later than the first Monday in March, 1828.

The objects to which the attention of the public is more particularly directed are arranged under the following heads:—

I.—IMPROVEMENT OF LAND.

1. Gaining extensive tracts of land from the sea, and bringing the same into cultivation.

2. Bringing into cultivation land previously lying waste.

3. Draining or otherwise improving land already under cultivation.

4. Making actual or comparative experiments on the effect of the substances already used as manures, or on any new substances, as sea-salt, nitre, or other material which may appear adapted to the same purpose.

5. The discovery and application of superior or cheaper means of effecting any of the foregoing objects.

II.—PLANTING FOREST AND FRUIT TREES.

6. Making extensive plantations of forest-trees, particularly on land unfit for other purposes.

7. Making experiments, or communicating information concerning the kinds of trees best adapted for cultivation in different soils and situations, or on the best modes of making and managing plantations, or live and dead fences, or of planting, pruning, and managing fruit-trees and orchards, or of securing plantations from injury by hares, rabbits, sheep, and cattle.

8. Introducing new and improved species or varieties of forest or fruit trees, or ornamental shrubs.

The Society will be glad to receive seeds, grafts, or cuttings for distribution.

9. Successfully and extensively cultivating the white mulberry-tree, for the purpose of feeding silk-worms.

The Society are desirous of ascertaining by experiment whether silk can be profitably raised in this country: the public are referred to a paper on this subject by the late Archibald Stephenson, Esq., in the 43d volume of the Society's Transactions.

III.—CULTIVATION OF CORN AND OTHER PLANTS.

10. Making experiments, or communicating information, on the different methods of growing wheat and other grain, and on the varieties of each, with the modes of culture best adapted to various soils and situations.

11. Communicating similar experiments or information on the various native and foreign grasses, clover, lucern, &c., and on the soils best adapted to them respectively.

* Certain inconveniences having been experienced in making the Agricultural Premiums competitory, they have, this year, by way of experiment, been offered in a more general manner, so that each communication will be judged merely from its own merits, without reference to any other on the same subject.

The public are referred to a communication on an improved variety of ray-grass published in the 44th volume of the Society's Transactions. Also to communications in the 40th and subsequent volumes, on a grass (a species of poa) which is used in the United States for making fine plat: but which, being very hardy, and producing abundant herbage, appears likely to prove valuable for meadow or pasture.

12. Ascertaining the possibility of successfully cultivating straw for making fine Leghorn plat, or procuring information concerning the modes of its cultivation and treatment in Italy.

13. Extensively cultivating the white poppy (*papaver somniferum*), and profitably extracting opium from the same; with a full communication of the means employed, and the results obtained.

14. Ascertaining the possibility of profitably cultivating, in this country, the *phormium tenax*, or New Zealand flax.

15. Successfully cultivating a variety of the field bean, which will ripen its seed earlier than those at present cultivated, by which the injurious effects of insects may be in some measure avoided, and more time allowed to till the land for the subsequent crop of wheat.—See the 44th vol. of the Society's Transactions.

16. Communicating information concerning the cause of, or remedy for, the rotting of the roots of clover in the ground.

17. Communicating new or improved methods of harvesting corn, or making hay in wet seasons.

18. Discovering new or improved means of preserving agricultural produce, particularly roots and plants, during the winter, in a fit state for feeding cattle and sheep in the spring; or of preserving plants, roots, and seeds, fit for vegetation during long voyages.

19. Introducing new and useful vegetables, or producing new and improved varieties of those already in cultivation.

20. Discovering effectual methods of destroying noxious insects and preventing blights, or in any way improving the health of trees or plants.

IV. CATTLE, SHEEP, PIGS, AND OTHER DOMESTIC ANIMALS.

21. Communicating new and useful information concerning the breeding, rearing, and feeding of cattle, or other domestic animals, with a view to improve their health or vigour, or to increase either the quantity or quality of the meat, milk, wool, or other produce.

22. Importing, breeding, and rearing, in this country, the Cachemere shawl goat.

23. Ascertaining the value of salt in feeding cattle, or in improving the quality of hay injured by the weather.

V. AGRICULTURAL MACHINES.

24. Inventing or improving machines for performing, in a superior manner, or at a cheaper rate, any agricultural operations.

CLASS OF CHEMISTRY AND MINERALOGY.

Claims for Premiums in this Department are to be sent in on or before the first Tuesday in February, 1828.

Generation of Steam.

25. For the best method of generating steam for engines in such a manner that its quantity or force shall be materially increased beyond the quantity or force of steam obtained by methods at present in practice, without increase of danger or expense;—*the Gold Medal, or Fifty Pounds.*

Prevention of Smoke.

26. For the best method of preventing the emission of dense smoke, from the chimneys of furnaces and fireplaces;—*the Gold Medal, or Fifty Pounds.*

Certificates to be produced to the Society, that the means proposed have been found to succeed in practice.

Test for Arsenic.

27. For the best test for arsenic in solution;—*the Gold Medal.*

Any communication in claim of this premium must include a method of detecting arsenic, not only in its usual form of white arsenic, or arsenious acid, but also in the state of arsenic acid, and of the soluble salts formed by the combination of arsenious and arsenic acids with alkaline substances.

Preventing the Ill Effects of Smelting Ores.

28. For the most effectual method of preventing the ill effects arising to vegetation and animal life, from the sulphureous, arsenical, or other noxious fumes disengaged in smelting the ores of copper, zinc, lead, tin, iron, &c. in the large way; and, if possible, of converting those pernicious fumes to useful purposes, in a manner superior to any hitherto known or in use;—*the Gold Medal, or Fifty Pounds.*

A full account of the process employed will be required, together with certificates of its having been successfully carried into effect.

Fine Bar-Iron.

29. To the person who shall make the greatest quantity of bar-iron, not less than ten tons, with coke, from coke pigs, equal in quality to the best iron imported from Sweden or Russia, and as fit for being converted into steel;—*the Gold Medal, or Fifty Pounds.*

Samples to be produced to the Society, not less than one quarter of a hundred weight, with certificates that the whole quantity is of equal quality.

Refining Copper from the Ore.

30. For a method of separating, purifying, and refining copper from the ore, so as to render it fit for those purposes to which fine copper is now applied, and by a process cheaper than, and superior to, any hitherto known or in use;—*the Gold Medal, or Fifty Pounds.*

Certificates that not less than three tons have been so prepared and refined, and a quantity of not less than 14 lbs. of the copper so refined to be produced to the Society.

Refining Zinc from the Ore.

31. For refining zinc from the ore, by a process superior to any hitherto known or in use, and rendering it fit for the purpose of making fine brass;—*the Gold Medal, or Fifty Pounds.*

Conditions the same as in the preceding.

Preparing Brass.

32. For a method of making brass from materials the produce of Great Britain or Ireland, of superior quality to that commonly manufactured in this country;—*the Gold Vulcan Medal, or Thirty Pounds.*

A full account of the process, and of the ingredients employed, together with their proportions, and certificates that one ton has been so manufactured, and a sample of the brass, not less than 14 lbs. to be produced to the Society.

Improved Earthenware Crucibles.

33. For manufacturing earthenware crucibles which shall not be liable to crack in the fire, and shall be capable of enduring the action of fluxes, and higher degrees of heat than those now in use, and shall not be too expensive;—*the Gold Vulcan Medal, or Thirty Pounds.*

A full account of the process to be produced to the Society, and of the materials employed, with satisfactory certificates of the crucibles having been found to answer in use, and specimens of the crucibles, with covers of the same materials.

Improved Melting Pots.

34. For manufacturing melting pots, for founders in brass, iron, and other metals, superior to those now in use, and not too expensive;—*the Gold Vulcan Medal, or Thirty Pounds.*

Conditions the same as in the preceding premium.

Purification of Coal Gas.

35. For a method, superior to any now in use, of purifying the inflammable gas procured from coal;—*the Gold Vulcan Medal, or Thirty Pounds.*

A full account of the process to be produced to the Society, with certificates of its fully answering the intended purpose.

Refining Whale or Seal Oil.

36. For an economical and effectual method of purifying whale or seal oil from the glutinous matter that incrusts the wicks of lamps, and extinguishes the light, though fully supplied with oil; provided that such purified oil resists congelation in an equal degree with the unpurified;—*the Gold Medal, or Fifty Pounds.*

A full account of the process to be produced to the Society, with certificates that not less than twenty gallons have been purified according to the process delivered in, together with two gallons of the oil in its unpurified state, and two gallons so refined.

Oil for Chronometers.

37. For a method, verified by actual experiment, of rendering oil more fit than any now in use for chronometers and watches, particularly in being less liable to become thick or rancid;—*the Gold Medal, or Fifty Pounds.*

A full account of the experiments to be produced to the Society, and of the process employed, with satisfactory certificates, together with a specimen of the oil.

Crown Glass.

38. To the person who shall make crown or window glass equally transparent, and as free from blue and green colour, as the best German sheet, and not more expensive;—*the Gold Vulcan Medal, or Thirty Pounds.*

Certificates to be produced to the Society, that not less than two cwt. have been made, together with one whole plate and two of the largest squares that can be cut, and a full account of the proportions of the ingredients, and of the process of manufacture.

Flint Glass.

39. To the person who shall invent a process for making flint glass free from veins, as dense and transparent as the best now in use, and quite fit for the purposes of opticians;—*the Gold Medal, or Thirty Pounds.*

A full account of the process, with certificates that it has been found to answer on repeated trials, that not less than 20 lbs. have been made, and that object-glasses, at least three and a half inches in diameter, have been manufactured of the same, together with specimens of the glass in its rough and manufactured state, to be produced to the Society.

Indelible Ink.

40. For a method of making a black writing ink, superior to any at present known, and indestructible by chemical applications, and that shall flow freely from the pen;—the *Silver Medal, or Fifteen Pounds.*

Certificates that not less than two gallons of such ink have been actually prepared, with a full detail of the process of making it, and two quarts of the ink, to be produced to the Society.

Printers' Ink.

41. For the best composition for printers' ink, superior to any hitherto in use;—*the Gold Vulcan Medal, or Thirty Pounds.*

Certificates that 112 lbs. of such ink have been made, with a full account of the process employed, and 6 lbs. of the ink to be produced to the Society.

Copper-plate Printers' Ink.

42. For the best composition for printers' ink, superior to any hitherto known, and fit for the finest kind of copper-plate printing;—*the Gold Vulcan Medal, or Thirty Pounds.*

Certificates and conditions the same as for the last premium.

Rendering Leather Water-proof.

43. For a method, superior to any now in use, of rendering leather water-proof, without injuring its texture or pliability;—*the Silver Medal, or Fifteen Pounds.*

A full account of the process, with samples of the leather in its unprepared and prepared state, to be produced to the Society.

Preserving Seeds of Vegetables.

44. For a method, superior to any at present known, and verified by sufficient trials, of preserving seeds of plants, during a long sea voyage, in a state fit for vegetation;—*the Gold Vulcan Medal, or Thirty Pounds.*

Preserving Provisions from becoming Rancid or Rusty.

45. For the best, cheapest, and most efficacious method, superior to any hitherto known, of preserving salted provisions from becoming rancid or rusty;—*the Gold Vulcan Medal, or Thirty Pounds.*

A full description of the method, with proper certificates that it has been found, on repeated trials, to answer the purpose intended, to be produced to the Society.

46. For a method of curing or preserving meat, during long sea voyages, superior to any now in use;—*the Gold Vulcan Medal, or Thirty Pounds.*

Conditions the same as for the preceding premium.

Preserving Iron from Rust.

47. For a cheap composition, superior to any now in use, which shall effectually preserve from rust wrought iron either forged or polished;—*the Gold Medal, or Fifty Pounds.*

A full description of the method of preparing the composition, with certificates that it has stood at least two years unimpaired, being exposed to the atmosphere during the whole time, with one pound weight of the composition, to be produced to the Society.

Preventing the Dry Rot in Timber.

48. For a certain method of preventing the dry rot in timber, superior to any hitherto known;—*the Gold Medal, or Fifty Pounds.*

The particulars of the method of prevention, confirmed by repeated experiments, to be produced to the Society.

Preventing Mildew in Paper or Canvas.

49. For a process to be used in the manufacture of paper or canvas, or some application to be made to manufactured paper or canvas, which shall effectually prevent it from becoming mildewed;—*the Gold Medal, or Fifty Pounds.*

A full account of the process employed, with certificates and other evidence of its efficacy, to be communicated to the Society.

Preventing the Destructive Effects from Moths.

50. For a cheap, easy, and effectual method, verified by repeated and satisfactory trials, of preventing the destructive effects occasioned by moths and other insects, in furs, woollens, specimens of natural history, and other articles, superior to any hitherto known or practised;—*the Gold Medal, or Fifty Pounds.*

The accounts, with proper certificates, to be produced to the Society.

Dyeing Silk of a Pink or Rose Colour.

51. For a substitute for safflower in dyeing silk rose and pink, which shall produce a colour equally beautiful and permanent, and at less expense;—*the Gold Vulcan Medal, or Forty Pounds.*

The communication, with a full account of the processes employed, and certificates, to be produced to the Society.

Improved Black Dye for Silk or Wool.

52. For a black dye for silk or wool, superior in colour aud durability to any at present in use;—*the Gold Medal, or Fifty Pounds.*

A full account of the process, attested by satisfactory certificates, as well as samples of the silk or wool so dyed, to be produced to the Society.

Substitute for the Basis of White Paint for Oil Colours.

53. For the best substitute, superior

to any hitherto known, for the basis of white paint for oil colours, equally proper for the purpose as the white lead now employed; such substitute not to be of a noxious quality, and to be afforded at a price not materially higher than that of white lead;—*the Gold Medal, or Fifty Pounds.*

A quantity of the substitute, not less than 10 lbs. weight, with an account of the process used in preparing it, and certificates that at least one hundred weight has been manufactured, to be produced to the Society.

Red Pigment.

54. For a red pigment, fit for use in oil and water, equal in tone and brilliancy to the best carmines and lakes now known or in use, perfectly durable, and more economical;—*the Gold Vulcan Medal, or Thirty Pounds.*

Four ounces of such colour, and a full disclosure of its preparation, to be produced to the Society.

N.B. It is required that the colour should remain unaltered by common exposure to strong day-light, damps, and noxious vapours.

Blue Pigment.

55. For a blue pigment, equal in colour, brilliancy, and durability, to the best ultramarine, and which may be afforded at a cheaper rate;—*the Gold Vulcan Medal, or Thirty Pounds.*

The conditions are the same as in the preceding premium for the red pigment.

Taking out Stains from White Marble.

56. For effectually removing or correcting stains in statuary marble;—*the Gold Medal, or Fifty Pounds.*

A full description of the process, and certificates of its full efficacy on trial, to be produced to the Society.

Stone for Lithography.

57. To the person who shall discover within Great Britain or Ireland, a quarry of stone fit for the purposes of lithography, equal to the best German stones;—*the Gold Medal, or Fifty Pounds.*

A specimen of the stone, at least two feet square and two inches in thickness, with an account of the situation of the quarry, and certificates of its possessing considerable extent, to be produced to the Society.

Substitute for Stone for Lithography.

58. To the person who shall discover and communicate to the Society any substance equally fit for the purposes of lithography with the best German stones;—*the Gold Isis Medal, or Thirty Pounds.*

A full description of the process of preparing or composing the substance, with specimens thereof, to be produced to the Society.

Mineralogical and Geological County Maps.

59. To the person who shall complete and publish the best mineralogical and geological map of any county in the United Kingdom, on a scale of not less than one inch to a mile;—*the Gold Medal, or Fifty Pounds.*

The map, with certificates of its accuracy, to be produced to the Society. One impression of the map to remain the property of the Society.

Mineralogical and Geological Map of Ireland.

60. To the person who shall complete and publish an accurate mineralogical and geological map of Ireland, on a scale of not less than an inch to five miles;—*the Gold Medal, or Fifty Pounds.*

The conditions are the same as in the preceding.

Mineralogical and Geological Map of Scotland.

61. The same premium is offered for a mineralogical and geological map of Scotland, on similar conditions.

A full account of the process, with samples of the leather in its unprepared and prepared state, to be produced to the Society.

Preserving Seeds of Vegetables.

44. For a method, superior to any at present known, and verified by sufficient trials, of preserving seeds of plants, during a long sea voyage, in a state fit for vegetation;—*the Gold Vulcan Medal, or Thirty Pounds.*

Preserving Provisions from becoming Rancid or Rusty.

45. For the best, cheapest, and most efficacious method, superior to any hitherto known, of preserving salted provisions from becoming rancid or rusty;—*the Gold Vulcan Medal, or Thirty Pounds.*

A full description of the method, with proper certificates that it has been found, on repeated trials, to answer the purpose intended, to be produced to the Society.

46. For a method of curing or preserving meat, during long sea voyages, superior to any now in use;—*the Gold Vulcan Medal, or Thirty Pounds.*

Conditions the same as for the preceding premium.

Preserving Iron from Rust.

47. For a cheap composition, superior to any now in use, which shall effectually preserve from rust wrought iron either forged or polished;—*the Gold Medal, or Fifty Pounds.*

A full description of the method of preparing the composition, with certificates that it has stood at least two years unimpaired, being exposed to the atmosphere during the whole time, with one pound weight of the composition, to be produced to the Society.

Preventing the Dry Rot in Timber.

48. For a certain method of preventing the dry rot in timber, superior to any hitherto known;—*the Gold Medal, or Fifty Pounds.*

The particulars of the method of prevention, confirmed by repeated experiments, to be produced to the Society.

Preventing Mildew in Paper or Canvas.

49. For a process to be used in the manufacture of paper or canvas, or some application to be made to manufactured paper or canvas, which shall effectually prevent it from becoming mildewed;—*the Gold Medal, or Fifty Pounds.*

A full account of the process employed, with certificates and other evidence of its efficacy, to be communicated to the Society.

Preventing the Destructive Effects from Moths.

50. For a cheap, easy, and effectual method, verified by repeated and satisfactory trials, of preventing the destructive effects occasioned by moths and other insects, in furs, woollens, specimens of natural history, and other articles, superior to any hitherto known or practised;—*the Gold Medal, or Fifty Pounds.*

The accounts, with proper certificates, to be produced to the Society.

Dyeing Silk of a Pink or Rose Colour.

51. For a substitute for safflower in dyeing silk rose and pink, which shall produce a colour equally beautiful and permanent, and at less expense;—*the Gold Vulcan Medal, or Forty Pounds.*

The communication, with a full account of the processes employed, and certificates, to be produced to the Society.

Improved Black Dye for Silk or Wool.

52. For a black dye for silk or wool, superior in colour aud durability to any at present in use;—*the Gold Medal, or Fifty Pounds.*

A full account of the process, attested by satisfactory certificates, as well as samples of the silk or wool so dyed, to be produced to the Society.

Substitute for the Basis of White Paint for Oil Colours.

53. For the best substitute, superior

to any hitherto known, for the basis of white paint for oil colours, equally proper for the purpose as the white lead now employed; such substitute not to be of a noxious quality, and to be afforded at a price not materially higher than that of white lead;—*the Gold Medal, or Fifty Pounds.*

A quantity of the substitute, not less than 10 lbs. weight, with an account of the process used in preparing it, and certificates that at least one hundred weight has been manufactured, to be produced to the Society.

Red Pigment.

54. For a red pigment, fit for use in oil and water, equal in tone and brilliancy to the best carmines and lakes now known or in use, perfectly durable, and more economical;—*the Gold Vulcan Medal, or Thirty Pounds.*

Four ounces of such colour, and a full disclosure of its preparation, to be produced to the Society.

N.B. It is required that the colour should remain unaltered by common exposure to strong day-light, damps, and noxious vapours.

Blue Pigment.

55. For a blue pigment, equal in colour, brilliancy, and durability, to the best ultramarine, and which may be afforded at a cheaper rate;—*the Gold Vulcan Medal, or Thirty Pounds.*

The conditions are the same as in the preceding premium for the red pigment.

Taking out Stains from White Marble.

56. For effectually removing or correcting stains in statuary marble;—*the Gold Medal, or Fifty Pounds.*

A full description of the process, and certificates of its full efficacy on trial, to be produced to the Society.

Stone for Lithography.

57. To the person who shall discover within Great Britain or Ireland, a quarry of stone fit for the purposes of lithography, equal to the best German stones;—*the Gold Medal, or Fifty Pounds.*

A specimen of the stone, at least two feet square and two inches in thickness, with an account of the situation of the quarry, and certificates of its possessing considerable extent, to be produced to the Society.

Substitute for Stone for Lithography.

58. To the person who shall discover and communicate to the Society any substance equally fit for the purposes of lithography with the best German stones;—*the Gold Iris Medal, or Thirty Pounds.*

A full description of the process of preparing or composing the substance, with specimens thereof, to be produced to the Society.

Mineralogical and Geological County Maps.

59. To the person who shall complete and publish the best mineralogical and geological map of any county in the United Kingdom, on a scale of not less than one inch to a mile;—*the Gold Medal, or Fifty Pounds.*

The map, with certificates of its accuracy, to be produced to the Society. One impression of the map to remain the property of the Society.

Mineralogical and Geological Map of Ireland.

60. To the person who shall complete and publish an accurate mineralogical and geological map of Ireland, on a scale of not less than an inch to five miles;—*the Gold Medal, or Fifty Pounds.*

The conditions are the same as in the preceding.

Mineralogical and Geological Map of Scotland.

61. The same premium is offered for a mineralogical and geological map of Scotland, on similar conditions.

CLASS OF POLITE ARTS.

HONORARY PREMIUMS FOR NOBILITY.

To GENTLEMEN *under the age of twenty-five, Sons or Grandsons of Peers or of Peeresses in their own right in the United Kingdom.*

62. For the best original painting or drawing of an historical subject;—*the Gold Medal.* For the next in merit, *the Gold Isis Medal.*

63. For the best copy of an historical subject;—*the Silver Medal.* For the next in merit, *the Silver Isis Medal.*

64. For the best original painting or drawing of a portrait;—*the Gold Isis Medal.* For the next in merit, *the Silver Medal.*

65. For the best copy of a portrait;—*the Silver Medal.* For the next in merit, *the Silver Isis Medal.*

66. For the best original painting or drawing of a landscape;—*the Gold Isis Medal.* For the next in merit, *the Silver Medal.*

67. For the best copy of a landscape;—*the Silver Medal.* For the next in merit, *the Silver Isis Medal.*

68. For the best original painting of flowers or fruit;—*the Gold Isis Medal.* For the next in merit, *the Silver Medal.*

69. For the best copy of fruit or flowers;—*the Silver Medal.* For the next in merit, *the Silver Isis Medal.*

70. For the best original painting of still-life;—*the Gold Isis Medal.* For the next in merit, *the Silver Medal.*

71. For the best copy of still-life;—*the Silver Medal.* For the next in merit, *the Silver Isis Medal.*

To LADIES *under the age of twenty-five, daughters or grand-daughters of Peers or Peeresses in their own right of the United Kingdom.*

72. For the best original painting or drawing of an historical subject;—*the Gold Medal.* For the next in merit, *the Gold Isis Medal.*

73. For the best copy of an historical subject;—*the Silver Medal.* For the next in merit, *the Silver Isis Medal.*

74. For the best original painting or drawing of a portrait;—*the Gold Isis Medal.* For the next in merit, *the Silver Medal.*

75. For the best copy of a portrait;—*the Silver Medal.* For the next in merit, *the Silver Isis Medal.*

76. For the best original painting or drawing of a landscape;—*the Gold Isis Medal.* For the next in merit, *the Silver Medal.*

77. For the best copy of a landscape;—*the Silver Medal.* For the next in merit, *the Silver Isis Medal.*

78. For the best original painting of flowers or fruit;—*the Gold Isis Medal.* For the next in merit, *the Silver Medal.*

79. For the best copy of flowers or fruit;—*the Silver Medal.* For the next in merit, *the Silver Isis Medal.*

80. For the best original painting of still-life;—*the Gold Isis Medal.* For the next in merit, *the Silver Medal.*

81. For the best copy of still-life;—*the Silver Medal.* For the next in merit, *the Silver Isis Medal.*

HONORARY PREMIUMS FOR GENTLEMEN AND LADIES.

To GENTLEMEN *under the age of eighteen.*

82. For the best drawing in chalk, pencil, or Indian ink, being a copy from any picture, print, or drawing of

a head or figure;—*the Silver Isis Medal.* For the next in merit, *the Silver Palette.*

83. For the best drawing in pencil, Indian ink, or chalk, of a landscape, being a copy;—*the Silver Isis Medal.* For the next in merit, *the Silver Palette.*

To GENTLEMEN *under the age of twenty.*

84. For the best drawing in chalk, pencil, or Indian ink, from a bust;—*the Silver Medal.* For the next in merit, *the Silver Isis Medal.*

To GENTLEMEN *under the age of twenty-one.*

Drawings and Paintings in Water-Colours.

85. For the best drawing in chalk, pencil, or Indian ink, from a statue or cast in plaster, of an entire figure;—*the Silver Medal.* For the next in merit, *the Silver Isis Medal.*

86. For the best drawing in pencil, Indian ink, or chalk, of an historical subject, being a copy;—*the Silver Medal.* For the next in merit, *the Silver Isis Medal.*

87. For the best painting in water-colours of an historical subject, being a copy;—*the Silver Medal.* For the next in merit, *the Silver Isis Medal.*

88. For the best painting in water-colours of a portrait, being a copy;—*the Silver Medal.* For the next in merit, *the Silver Isis Medal.*

89. For the best painting in water-colours of a landscape, being a copy;—*the Silver Medal.* For the next in merit, *the Silver Isis Medal.*

90. For the best painting in water-colours of flowers or fruit, being a copy;—*the Silver Medal.* For the next in merit, *the Silver Isis Medal.*

Paintings in Oil.

91. For the best copy in oil-colours of an historical subject;—*the Silver Medal.* For the next in merit, *the Silver Isis Medal.*

92. For the best copy in oil-colours of a portrait;—*the Silver Medal.* For the next in merit, *the Silver Isis Medal.*

93. For the best copy in oil-colours of a landscape;—*the Silver Medal.* For the next in merit, *the Silver Isis Medal.*

94. For the best copy in oil-colours of flowers or fruit;—*the Silver Medal.* For the next in merit, *the Silver Isis Medal.*

To GENTLEMEN *under the age of twenty-five.*

Drawings and Paintings in Water-Colours.

95. For the best original painting in water-colours of an historical subject;—*the Gold Isis Medal.* For the next in merit, *the Silver Medal.*

96. For the best original painting in water-colours of a portrait, being a miniature;—*the Gold Isis Medal.* For the next in merit, *the Silver Medal.*

97. For the best original painting in water-colours of a landscape;—*the Gold Isis Medal.* For the next in merit, *the Silver Medal.*

98. For the best original painting in water-colours of flowers or fruit;—*the Gold Isis Medal.* For the next in merit, *the Silver Medal.*

Paintings in Oil.

99. For the best original painting in oil-colours of an historical subject, consisting of not less than three figures;—*the Gold Medal.* For the next in merit, *the Gold Isis Medal.*

100. For the best original painting in oil-colours of a portrait;—*the Gold Isis Medal.* For the next in merit, *the Silver Medal.*

101. For the best original painting in oil-colours of a landscape;—*the Gold Isis Medal.* For the next in merit, *the Silver Medal.*

102. For the best original painting in oil-colours of flowers or fruit:—*the Gold Isis Medal.* For the next in merit, *the Silver Medal.*

103. For the best original painting in oil-colours of still-life;—*the Gold Isis Medal.* For the next in merit, *the Silver Medal.*

To LADIES *under the age of eighteen.*

104. For the best drawing in pencil, Indian ink, or chalk, being a copy from any picture, print, or drawing, of a head or figure;—*the Silver Isis Medal.* For the next in merit, *the Silver Palette.*

105. For the best drawing in pencil, Indian ink, or chalk, of a landscape, being a copy;—*the Silver Isis Medal.* For the next in merit, *the Silver Palette.*

To LADIES *under the age of twenty.*

106. For the best drawing in pencil, Indian ink, or chalk, from a bust;—*the Silver Medal.* For the next in merit, *the Silver Isis Medal.*

To LADIES *under the age of twenty-one.*

Drawings and Paintings in Water-Colours.

107. For the best drawing in pencil, Indian ink, or chalk, from a statue or cast in plaster, of an entire figure;—*the Silver Medal.* For the next in merit, *the Silver Isis Medal.*

108. For the best drawing in pencil, Indian ink, or chalk, being a copy of an historical subject;—*the Silver Medal.* For the next in merit, *the Silver Isis Medal.*

109. For the best painting in water-colours, being a copy, of an historical subject;—*the Silver Medal.* For the next in merit, *the Silver Isis Medal.*

110. For the best painting in water-colours of a portrait, being a copy;—*the Silver Medal.* For the next in merit, *the Silver Isis Medal.*

111. For the best painting in water-colours of a landscape, being a copy;—*the Silver Medal.* For the next in merit, *the Silver Isis Medal.*

112. For the best painting in water-colours, being a copy, of fruit or flowers;—*the Silver Medal.* For the next in merit, *the Silver Isis Medal.*

Paintings in Oil.

113. For the best copy in oil-colours of an historical subject;—*the Silver Medal.* For the next in merit, *the Silver Isis Medal.*

114. For the best copy in oil-colours of a portrait;—*the Silver Medal.* For the next in merit, *the Silver Isis Medal.*

115. For the best copy in oil-colours of a landscape;—*the Silver Medal.* For the next in merit, *the Silver Isis Medal.*

116. For the best copy in oil-colours of fruit or flowers;—*the Silver Medal.* For the next in merit, *the Silver Isis Medal.*

To LADIES *under the age of twenty-five.*

Drawings and Paintings in Water-Colours.

117. For the best original painting in water-colours of an historical subject;—*the Gold Isis Medal.* For the next in merit, *the Silver Medal.*

118. For the best painting of a portrait in water-colours, being a miniature;—*the Gold Isis Medal.* For the next in merit, *the Silver Medal.*

119. For the best original painting in water-colours of a landscape;—*the Gold Isis Medal.* For the next in merit, *the Silver Medal.*

120. For the best original painting in water-colours of fruit or flowers;—*the Gold Isis Medal.* For the next in merit, *the Silver Medal.*

Paintings in Oil.

121. For the best original painting in oil-colours of an historical subject, consisting of not less than three figures;—*the Gold Medal.* For the next in merit, *the Gold Isis Medal.*

122. For the best original painting in oil-colours of a portrait;—*the Gold Isis Medal.* For the next in merit, *the Silver Medal.*

123. For the best original painting in oil-colours of a landscape;—*the Gold Isis Medal.* For the next in merit, *the Silver Medal.*

124. For the best original painting in oil-colours of fruit or flowers;—*the Gold Isis Medal.* For the next in merit, *the Silver Medal.*

125. For the best original painting in oil-colours of still-life;—*the Gold Isis Medal.* For the next in merit, *the Silver Medal.*

N.B. As the foregoing honorary premiums are intended only for the nobility and gentry, persons professing any branch of the polite arts, or any business dependent on the arts of design, or the sons and daughters of such persons, will not be admitted candidates in the above classes.

PREMIUMS FOR ARTISTS AND OTHERS.

Human Figure.

126. For the best drawing in chalk, pencil, or Indian ink, copied from any picture, print, or drawing, by persons under the age of sixteen;—*the Silver Isis Medal.* For the next in merit, *the Silver Palette.*

127. For the best outline, drawn from any entire figure of the antique, or cast in plaster, the size of the drawing to be not less than twenty-four inches, to be accompanied with a drawing of a hand and foot the size of life, by persons under the age of eighteen;—*the Silver Medal.* For the next in merit, *the Silver Isis Medal.*

128. For the best finished drawing from any entire antique figure, or from any cast in plaster, the size of the drawing to be not less than twenty-four inches, to be accompanied with a drawing of a hand and foot the size of life, by persons under the age of nineteen;—*the Silver Medal.* For the next in merit, *the Silver Isis Medal.*

129. For the best outline drawing of an entire anatomical human figure, from a model or cast, the size of the drawing to be not less than twenty-four inches, to be accompanied with a drawing of a hand and foot the size of life, by persons under the age of nineteen;—*the Silver Medal.* For the next in merit, *the Silver Isis Medal.*

130. For the best drawing from the living figure, the size of the drawing to be not less than twenty-four inches, by persons under the age of twenty-one;—*the Silver Medal.* For the next in merit, *the Silver Isis Medal.*

131. For the best copy in water-colours from any picture, being a composition of two or more figures, the size of the principal figure not less than nine inches, by persons under the age of twenty-one;—*the Silver Medal.* For the next in merit, *the Silver Isis Medal.*

132. For the best original drawing, being a composition of two or more figures, the principal figure not less than nine inches, by persons under the age of twenty-five;—*the Gold Isis Medal.* For the next in merit, *the Silver Medal.*

133. For the best copy in oil from any picture, being a composition of two or more figures, the principal figure not less than twenty-four inches, by persons under the age of twenty-one;—*the Silver Medal.* For the next in merit, *the Silver Isis Medal.*

134. For the best original painting in oil, being an historical composition, the principal figure not less than twenty-four inches high, and the size of the canvass to be a common half-length (or three feet four inches by four feet two inches); the subject, the discovery of Ulysses by Euryclea:

" She then approaching ministered the bath
To her own king, and at first touch discerned
The token, by a savage boar of old impressed:
That scar, while chafing him with open palms,
The matron knew; she left his foot to fall;
Down dropped his leg into the vase; the brass
Rang, and, o'ertilted by the sudden shock,
Poured forth the water, flooding wide the floor.

Her spirit joy at once and sorrow seized;
Tears filled her eyes, her intercepted voice
Died in her throat; but with a trembling hand
Stretched forth to clasp his beard, at length she spoke,
'Thou art himself, Ulysses'."

Homer's Odyssey, Cowper's Translation, xix. 473.

by persons under the age of twenty-five;—*the Gold Medal.* For the next in merit, *the Gold Isis Medal.*

135. For the best original painting in oil, being an historical or poetical composition, of not less than three figures, the principal figure not less than twenty-four inches high; the size of the canvass to be a common half-length (or three feet four inches by four feet two inches) by persons under the age of twenty-five;—*the Gold Medal.* For the next in merit, *the Gold Isis Medal.*

Heads or Portraits.

136. For the best drawing of a head, copied from any picture, drawing, or print, by persons under the age of sixteen;—*the Silver Isis Medal.* For the next in merit, *the Silver Palette.*

137. For the best finished drawing of a head, not less than the size of life, from any bust, by persons under the age of eighteen;—*the Silver Medal.* For the next in merit, *the Silver Isis Medal.*

138. For the best painting in oil, from an antique bust or cast, by persons under the age of nineteen;—*the Silver Medal.* For the next in merit, *the Silver Isis Medal.*

139. For the best original painting in water-colours of a portrait, or group of portraits, by persons under the age of twenty-one;—*the Gold Isis Medal.* For the next in merit, *the Silver Isis Medal.*

140. For the best portrait in miniature, in water-colours, being a copy, by persons under the age of twenty;—*the Silver Medal.* For the next in merit, *the Silver Isis Medal.*

141. For the best original portrait in miniature, in water-colours, by persons under the age of twenty-five;—*the Gold Isis Medal.* For the next in merit, *the Silver Medal.*

142. For the best copy in oil, of a portrait, by persons under the age of nineteen;—*the Silver Medal.* For the next in merit, *the Silver Isis Medal.*

143. For the best original painting in oil of a portrait, by persons under the age of twenty-five;—*the Gold Isis Medal.* For the next in merit, *the Silver Medal.*

Models.

144. For the best model in bas-relief, from any entire antique figure or cast in plaster, the size of the model not less than twenty-four inches, by persons under the age of eighteen;—*the Silver Isis Medal.* For the next in merit, *the Silver Palette.*

145. For the best model in bas-relief, from the living figure, by persons under the age of twenty-one, the model not less than twenty-four inches;—*the Silver Medal.* For the next in merit, *the Silver Isis Medal.*

146. For the best model of a bust from the antique, of a different size from the original, by persons under the age of twenty-one;—*the Silver Medal.* For the next in merit, *the Silver Isis Medal.*

147. For the best model of a bust from nature, of the size of life, by persons under the age of twenty-one;—*the Silver Medal.* For the next in merit, *the Silver Isis Medal.*

148. For the best model in the round, from an entire antique figure, the model not less than twenty-four inches high, by persons under the age of twenty-one;—*the Silver Medal.* For the next in merit, *the Silver Isis Medal.*

149. For the best original model of a single figure, not less than twenty-four inches high, by persons under the age of twenty-five;—*the Gold Isis Medal.* For the next in merit, the *Silver Medal.*

150. For the best original model of a group, the subject, *Orlando and the*

Wrestler, from Shakespear's "As You Like it": the figures not less than twenty-four inches, by persons under the age of twenty-five;—*the Gold Medal.* For the next in merit, *the Gold Isis Medal.*

Landscape.

151. For the best drawing of a landscape, copied from any picture, drawing, or print, by persons under the age of eighteen;—*the Silver Isis Medal.* For the next in merit, *the Silver Palette.*

152. For the best original drawing of a landscape from nature, by persons under the age of twenty-one;—*the Silver Medal.* For the next in merit, *the Silver Isis Medal.*

153. For the best original oil painting of a landscape from nature, by persons under the age of twenty-three;—*the Gold Isis Medal.* For the next in merit, *the Silver Medal.*

154. For the best original composition of a landscape painted in oil, by persons under the age of twenty-five;—*the Gold Isis Medal.* For the next in merit, *the Silver Medal.*

155. For the best original marine painting, in oil, of two or more vessels, by persons under the age of twenty-five;—*the Gold Isis Medal.* For the next in merit, *the Silver Medal.*

Flowers or Fruit.

156. For the best painting in water-colours, being a copy, by persons under the age of sixteen;—*the Silver Isis Medal.* For the next in merit, *the Silver Palette.*

157. For the best original composition in water-colours, from nature, by persons under the age of twenty-one;—*the Silver Medal.* For the next in merit, *the Silver Isis Medal.*

158. For the best original composition in oil, painted from nature, by persons under the age of twenty-five;—*the Gold Isis Medal.* For the next in merit, *the Silver Medal.*

Animals.

159. For the best drawing of one or more animals, copied from any picture, print, or drawing, by persons under the age of sixteen;—*the Silver Isis Medal.* For the next in merit, *the Silver Palette.*

160. For the best original drawing from nature, of one or more animals, by persons under the age of twenty-one;—*the Silver Medal.* For the next in merit, *the Silver Isis Medal.*

161. For the best original painting in oil, of a group of not less than three animals, painted from nature, by persons under the age of twenty-five;—*the Gold Isis Medal.* For the next in merit, *the Silver Medal.*

Still-life.

162. For the best original composition, painted in oil or water colours, of three or more such subjects as are usually called still-life, by persons under the age of twenty-one;—*the Silver Medal.* For the next in merit, *the Silver Isis Medal.*

Architecture.

Claims for the architectural premiums are to be sent into the Society on or before the third Tuesday in January, 1828.

163. For the best drawing in perspective from a Corinthian or other ornamented capital, not less than eighteen inches high, by persons under twenty-one years of age;—*the Silver Medal.* For the next in merit, *the Silver Isis Medal.*

164. For the best drawing of an original composition of foliage or other ornament adapted to the decorative purposes of architecture;—*the Gold Isis Medal.* For the next in merit, the *Silver Medal.*

The drawing to remain the property of the Society.

165. For the best design for a Gothic Cathedral;—*the Gold Medallion.* For the next in merit, *the Silver Medal.*

The following inscription to be engraved on the medallion; "*The premium given by the Society for the Encouragement of Arts, Manufactures, and Commerce, in conformity to the will of John Stock, Esq., of Hampstead.*"

The drawing sent in for this premium to consist of one or more plans, elevations,

and perspective views, with separate representations of such parts as may be necessary to give a complete explanation of the design. The drawings to be made on a scale of one-twelfth of an inch to a foot; the perspective view, and the particular parts, on a larger scale if necessary.

166. For the best perspective drawing of any public building in the United Kingdom, from actual elevations taken by measurement, and projected according to rule, drawn on large elephant paper, by persons under the age of twenty-one;—*the Silver Medal.* For the next in merit, *the Silver Isis Medal.*

167. For the best original model of foliage or other ornament adapted to architectural decoration, not less than two square feet of surface;—*the Gold Isis Medal.* For the next in merit, *the Silver Medal.*

168. For the best original model of an enriched architectural moulding, or other small ornament;—*the Silver Medal.* For the next in merit, *the Silver Isis Medal.*

169. For the best model of an architectural ornament, being a copy;—*the Silver Medal.* For the next in merit, *the Silver Isis Medal.*

Drawings of Machinery.

170. For the best perspective drawing of machinery, by persons under the age of twenty-one;—*the Silver Medal.* For the next in merit, *the Silver Isis Medal.*

Enamel Painting.

171. For the best enamel painting of a head, by persons under the age of twenty-three;—*the Silver Medal.* For the next in merit, *the Silver Isis Medal.*

172. For the best historical painting in enamel, by persons under the age of thirty;—*the Gold Isis Medal.* For the next in merit, *the Silver Medal.*

Carving in Wood.

173. For the best carving in wood of fruit or flowers, not less than nine inches high, by persons under the age of twenty-one;—*the Silver Medal.* For the next in merit, *the Silver Isis Medal.*

174. For the best carving in wood, of one or more animals, the size of the animal not less than eight inches, by persons under the age of twenty-three;—*the Silver Medal.* For the next in merit, *the Silver Isis Medal.*

175. For the best carving in wood, of one or more human figures, not less than a foot in height, by persons under the age of twenty-five;—*the Gold Isis Medal.* For the next in merit, *the Silver Medal.*

176. For the best carving in wood, of any enriched border or ornamental design;—*the Gold Isis Medal.* For the next in merit, *the Silver Medal.*

Etching.

177. For the best free etching in historical composition, by persons under the age of twenty;—*the Silver Medal.* For the next in merit, *the Silver Isis Medal.*

178. For the best free etching of a landscape, by persons under the age of twenty;—*the Silver Isis Medal.* For the next in merit, *the Silver Palette.*

179. For the best free etching in historical composition, by persons under the age of twenty-five;—*the Gold Isis Medal.* For the next in merit, *the Silver Medal.*

180. For the best free etching of a landscape, by persons under the age of twenty-five;—*the Silver Medal.* For the next in merit, *the Silver Isis Medal.*

Finished Engravings on Steel or Copper.

181. For the best finished engraving in historical composition, by persons under the age of twenty;—*the Silver Medal.* For the next in merit, *the Silver Isis Medal.*

182. For the best finished engraving of a landscape, by persons under the age of twenty;—*the Silver Medal.* For the next in merit, *the Silver Isis Medal.*

183. For the best finished engraving

in historical composition, by persons under the age of twenty-five;—*the Gold Medal.* For the next in merit, *the Gold Isis Medal.*

184. For the best finished engraving of a landscape, by persons under the age of twenty-five;—*the Gold Isis Medal.* For the next in merit, *the Silver Medal.*

185. For the best finished engraving of a portrait, by persons under the age of twenty-five;—*the Gold Isis Medal.* For the next in merit, *the Silver Medal.*

186. For the best finished engraving on steel, in mezzotinto;—*the Gold Isis Medal.*

N.B. In the class of finished engravings the Society require an aquafortis impression, and a finished proof, to be sent, and to remain with the Society.

Engraving on Blocks.

187. For the best engraving on wood or metal blocks, of an historical subject, the size of the principal figure not less than six inches in height, and the block to be at least twelve inches by nine;—*the Gold Isis Medal.*

Two or more impressions, with the block, to be produced to the Society. The impressions, but not the block, to remain the property of the Society.

Lithography.

188. For the best specimen in this art;—*the Gold Isis Medal.*

The specimen to remain the property of the Society.

189. For the best account of the process employed in lithography superior to any hitherto known to the public;—*the Gold Isis Medal, or Thirty Pounds.*

The particulars of the process, accompanied by specimens of the art, and of the materials employed, with all other necessary information, to be produced to the Society on or before the first Tuesday in March, 1828.

190. For the best method of transferring drawings from the paper to the stone, for the purpose of lithography, superior to any hitherto in use;—*the Silver Medal, or Twenty Pounds.*

A complete account of the process employed, with specimens of the materials, to be produced to the Society.—Two specimens of the impression to remain with the Society.

Medal Die Engravings.

191. For the best die engraving either of a head or single figure, after the engraver's own design or model, by persons under the age of twenty-one;—*the Gold Isis Medal.* For the next in merit, *the Silver Medal.*

192. For the best die engraving of a group, after the engraver's own design and model, by persons under the age of thirty;—*the Gold Medal.* For the next in merit, *the Gold Isis Medal.*

The dies with two impressions or casts, and the model, in each claim for medal die sinking, are to be produced to the Society, and the impressions or casts to remain the property of the Society.

193. To the person who shall discover and communicate to the Society a method of making and hardening medal dies, superior to any hitherto known, and which shall prevent the surface of the die from being cracked, scaled, warped, or otherwise injured;—*the Gold Medal, or Thirty Pounds.*

A full and detailed account of all the processes required to produce the effect, with certificates of their successful application, to be delivered to the Society.

Gem Engraving.

194. For the best engraving in intaglio, of a head or single figure, on carnelian or other hard stone, being a copy;—*the Silver Medal.* For the next in merit, *the Silver Isis Medal.*

195. For the best engraving in intaglio of a head or figure, after the engraver's own design and model, on a carnelian or other hard stone;—*the Gold Isis Medal.* For the next in merit, *the Silver Medal.*

196. For the best engraving in intaglio of a group, after the engraver's own design and model, on carnelian or other hard stone;—*the Gold Medal.* For the next in merit, *the Gold Isis Medal.*

197. For the best engraving in cameo of a head or single figure, on carnelian or other hard stone, being a copy;—*the Silver Medal.* For the next in merit, *the Silver Isis Medal.*

198. For the best engraving in cameo of a head or figure, after the engraver's own design and model, on carnelian or other hard stone;—*the Gold Isis Medal.* For the next in merit, *the Silver Medal.*

199. For the best engraving in cameo of a group, after the engraver's own design and model, on carnelian or other hard stone;—*the Gold Medal.* For the next in merit, *the Gold Isis Medal.*

Premiums for Medical or Surgical Students.

200. For the best coloured anatomical model of a dissected limb, or other part of the human body, in wax or other substance;—*the Gold Medal.*

201. For the best original drawing (made from actual dissection) of the anatomy of the human body, or of any part thereof, sufficiently full and accurate for the purposes of surgery, such drawing to be not less than the natural size of the parts, by persons under the age of twenty-five;—*the Silver Medal.* For the next in merit, *the Silver Isis Medal.*

It is required that each model and drawing be accompanied by an outline, with the necessary references to render them intelligible.

Conditions for the Polite Arts.

All performances in the class of Polite Arts, except those relating to architectural subjects, are to be produced to the Society on or before the first Tuesday in March, 1828, and none can be received after that day.

No candidate, under any pretence whatever, shall be allowed to retouch or varnish a performance after it has been received by the Society.

No candidate having received a premium or bounty, shall receive an equal reward in the same class or any reward in an inferior class of the same department of art. Nor shall any bounty be given lower than one degree below the lowest of the premiums offered in each class.

No more than one performance in each class shall be received from the same candidate.

No candidate shall receive more than one premium or bounty in the same year.

All performances, to which premiums or bounties are adjudged, shall remain with the Society until after the second Wednesday in June, 1828, when they will be redelivered, unless mentioned in the premiums to the contrary.

No performance shall be admitted, that has obtained a reward from any other society, or academy.

All performances must have been executed within the year previous to their being sent in to the Society, except the finished engravings on steel and copper, which must have been executed within two years.

No performance can be received which does not come into one of the foregoing classes, and which does not agree with the conditions of the class in which it is introduced, except by a particular recommendation from the committee, and confirmed by the Society, that it is deserving of being made an exception to the general rule, and in such case a bounty may be given.

It is required, that the subjects for which premiums are offered be delivered in without the names, or any external intimation to whom they belong; that the candidates affix on the front of their performances whatever mark they please, each performance having a different mark, and that the same mark be inscribed on the outside of a paper sealed up, containing within, the name and residence of the candidate, and *on the outside*, the sex, and age, and the number of the premium in claim of which the performance is offered, and whether the candidate has previously received from the Society any and what reward; the name not to be disclosed unless the candidate be successful, or in consequence of a special vote of the Society, or Committee.

If a person be a candidate in more than one class a separate letter must be sent in with each performance.

To prevent attempts to impose on the Society, by producing drawings made or retouched by any other person than the candidate, the Society require a specimen of the abilities of each successful candidate to be made under the inspection of the Committee of Polite Arts.

All copies are to be on a different scale from the original; and, if possible, the original is to be sent with the copy.

The Society reserve to themselves the power of giving medals of less value than those proposed; or of withholding them altogether in cases where the performance shall be deemed undeserving of reward. But if there should be, in the same class, more than two works of merit, deserving encouragement, the committee is allowed to recommend, at the same time, to the Society that a bounty be given; and in case of the second premium offered being the lowest reward which the Society gives, such lowest reward may be repeated as a bounty.

In consideration of the great number of premiums here offered, embracing so many departments of the fine arts, no bounty can be given, except by a special recommendation in cases of extraordinary merit; the reason of such recommendation to be particularly stated in the report of the Committee.

CLASS OF MANUFACTURES.

Claims for the following premiums are to be sent in on or before the second Tuesday in February 1828.

Fine Wool.

202. To the person who shall have produced from his own flock, in the year 1827, the greatest quantity, not less than five cwt. of wool equal to the Spanish merino, and as fit for the purpose of being manufactured into superfine cloth;—*the Gold Medal.*

Certificates, along with samples of the wool, and of the cloth manufactured from it, to be produced to the Society.

203. For the next greatest quantity, not less than two hundred and fifty pounds;—*the Silver Medal,* on similar conditions.

Transparent Paper for Tracing.

204. For a method of making transparent paper, better than any hitherto in use, and that shall take and bear common writing-ink with the same facility and correctness as writing-paper;—*the Silver Medal, or Twenty Pounds.*

Certificates of the making such paper, an account of the process, and one ream of the paper, to be produced to the Society.

Leather for Gloves.

205. For a process superior to any now in use, for preparing, dyeing, and finishing skins, for fine gloves, verified by actual experiment, and the communication accompanied with, at least, a dozen pair of gloves made from skins so prepared;—*the Gold Medal, or Thirty Pounds.*

Certificates from competent persons, fully approving of the result of such experiments, together with the gloves and communication, to be produced to the Society.

Hose for Fire-Engines, Brew-houses, &c.

206. For a method of making hose for fire-engines, brew-houses, &c. similar to those used on the continent, made of flax or hemp, or other flexible material cheaper than leather, and equally water-tight;—*the Gold Isis Medal, or Thirty Pounds.*

A full account of the process used in manufacturing it, with certificates of its efficacy in practice, to be produced to the Society.

Thread for Lace.

207. For a method of manufacturing thread from flax, of as fine quality as any used on the continent;—*the Gold Medal, or Thirty Pounds.*

Samples of the thread, not less than one pound in weight, and of the lace made therefrom, together with certificates that not less than ten pounds in weight have been manufactured, to be produced to the Society.

Shawls of Cachemere Wool.

208. For a shawl made of Cache-

mere wool, and which shall be the best imitation of the real Indian shawls made from the same material; —*the Gold Medal, or Thirty Pounds.*

Certificates from competent persons, approving the articles manufactured, with a full account of the process employed therein, to be produced to the Society.

Shawls in imitation of Cachemere.

209. To the person who shall manufacture, of any material, except Cachemere wool, and produce to the Society a shawl equal in beauty, and in fineness of texture, to the best Indian shawls made of Cachemere wool;—*the Gold Medal, or Thirty Pounds.*

Conditions the same as for the preceding.

Winding Silk.

210. For a method better than any hitherto known, of winding raw silk that is in any degree sticky in its gum, or brittle in its texture, without injuring its colour or texture, and at a cost not exceeding that of the ordinary methods;—*the Silver Medal, or Twenty Pounds.*

A full description of the process, and apparatus used, and samples of the silk, both in its wound and raw state, together with certificates of the process having answered the required conditions, to be produced to the Society.

Organzine Silk.

211. For a method by which to organzine silk equal in quality to the Italian throw, at an expence less than the current price of throwing; —*the Gold Medal, or Fifty Pounds.*

The communication, with a full description of the process, and models or drawings of the apparatus employed, and samples of the produce, with certificates of the invention answering the required conditions, to be produced to the Society.

Machine for Silk Weaving.

212. For a machine for weaving figured silks, superior in its mode of action, and in the nature and extent of the work it will produce, to the looms at present known;—*the Gold Medal, or Fifty Pounds.*

Certificates of the performance of the machine, and a model of the same, to be produced to the Society.

Machine for Weaving Ribbons.

213. For a machine for weaving figured ribbons, superior in the nature and extent of the work performed to the looms at present known;—*the Gold Vulcan Medal, or Thirty Pounds.*

The improved plan to be capable of producing ribbons equal in texture to those of French manufacture, and to perform well in every respect. The entire height of the loom and its appendages not to exceed eight feet. Specimens of the ribbons made with the improved loom, to be produced to the Society.

Power Looms for Figured Silk or Ribbons.

214. For a machine for weaving figured silks or ribbons, by which the best sorts of works may be executed, and to which steam, or any similar power may be applied;—*the Gold Medal, or Fifty Pounds.*

Conditions the same as the last but one.

Matting.

215. For the best specimen of matting, resembling India matting used for covering rooms, made from materials grown in Great Britain;—*the Silver Medal, or Fifteen Pounds.*

Certificates that not less than fifty yards of this matting have been manufactured, and that it will answer the purpose of India matting, and can be afforded at a less price, together with a sample of not less than six yards, and a complete account of the process of manufacture, to be produced to the Society.

British Cambric.

216. For having manufactured, or caused to be manufactured, of flax only, the best specimen of British cambric, not fewer than ten pieces; —*the Gold Vulcan Medal.*

Certificates, and one piece as a specimen, to be sent to the Society.

CLASS OF MECHANICS.

Claims for the following Premiums to be sent in on or before the last Tuesday in February 1828.

Gunpowder Mills.

217. For the most effectual mode of preventing explosions in gunpowder mills;—*the Gold Medal, or One Hundred Pounds.*

Certificates and accounts of the method having been put in practice in one or more gunpowder-mills in this kingdom, and that it promises, in the opinion of the best judges concerned in such works, to answer the purpose intended, to be produced to the Society.

N.B. As an encouragement to persons to turn their thoughts to improvements of this nature, if any should be made on the present method of conducting the business of gunpowder-making, which fall short of the total prevention of explosion, such bounty or reward will be bestowed on them as they may appear to merit.

Machine for raising Water.

218. For a machine, on a better, cheaper, and more simple construction than any hitherto known for raising water out of wells, &c. from a depth of not less than fifty feet;—*the Gold Medal, or Thirty Pounds.*

Certificates of the performance of the machine, and a model of it, to be produced to the Society.

Extinguishing Fires.

219. For a method for preventing or extinguishing fire in buildings, superior to any now in use;—*the Gold Medal, or Thirty Pounds.*

Certificates of the method having been practised with sueeess, with a full description thereof, to be delivered to the Society.

This premium is offered in compliance with a recommendation in the will of the late Dr. Anthony Fothergill.

Boring and Blasting Rocks.

220. For a more simple, safe, cheap, and expeditious method than any hitherto known or in use, of boring and blasting rocks in mines, shafts, wells, &c.;—*the Gold Medal, or Thirty Pounds.*

Certificates of the method having been practised with success, with a full description thereof, to be delivered to the Society.

Warming Buildings.

221. For a method of heating rooms, superior to and cheaper than any hitherto known or in use;—*the Gold Medal, or Thirty Pounds.*

A model or complete drawing and description of the method, with certificates that it has been successfully practised, to be delivered to the Society.

Improved Ventilation.

222. For a mode of permanently ventilating hospitals, workhouses, stables, and other buildings, superior to any now known or used;—*the Gold Medal, or Thirty Pounds.*

A model of the apparatus, and a full account of the means by which the effect has been produced, with proper certificates, to be delivered to the Society.

Ventilating Coal Mines.

223. For a method of ventilating coal mines so as effectually to prevent the accidents liable to arise from the accumulation of carburetted hydrogen and other gases;—*the Gold Medal, or Fifty Pounds.*

A full account of the process, with certificates of its efficacy, to be produced to the Society.

N.B. The Society will be very glad to attend to any communication, which, though not completely effecting the object, appears to offer an approximation to it. The Society wish particularly to refer candidates for this premium to the communication made by Mr. Ryan, and published in the 34th vol. of "The Transactions;" and will consider themselves obliged to any person who will furnish any information with respect to the attempts which have been made to introduce Mr. Ryan's mode of ventilating coal mines into actual use, and of the success with which this method has been attended.

Preventing Accidents from Stage Coaches.

224. For a method of preventing

accidents arising from stage coaches; —*the Gold Medal, or Thirty Pounds.*

Ample certificates of its efficacy, with a description and model, to be produced to the Society.

N.B. The Society wish to impress strongly on the public the necessity of turning their attention to the above premium, from the number of accidents that daily occur; and suggest whether they might not, in some degree, be prevented by an alteration in the manner of placing the luggage.

Improving Turnpike and other Roads.

225. For the most effectual and cheapest method, verified by actual experiment, of making an even, hard, and durable carriage-road;—*the Gold Medal, or Thirty Pounds.*

It is required, that an accurate account of the method used, and every expense attending it, together with satisfactory certificates of its being effectual, be delivered to the Society.

Preventing Prejudicial Effects to the Persons employed in Dry-grinding.

226. For a mode, superior to any hitherto published, of obviating the prejudicial effects that attend the operation of pointing needles, and other branches of dry-grinding, during which the particles of grindstone-dust, steel, and iron, being thrown into the air, and received with it into the lungs, occasion asthma, consumption, and other painful disorders;—*the Gold Medal, or Thirty Pounds.*

A model of the apparatus, and a full account of the means by which the effect has been produced, together with proper certificates of its practicability and adoption, to be delivered to the Society.

Preventing Explosion in Steam-engine and other closed Boilers.

227. To the person who shall invent and discover to the Society a method of rendering closed boilers used for steam-engines and other purposes, safer han any now in use, and less liable to accidents from explosion;—*the Gold Medal, or Thirty Pounds.*

Ample certificates that the method has been found to answer its intended purpose, to be produced to the Society.

Machine for Sweeping Chimneys.

228. For an apparatus for sweeping chimneys, superior in facility of application and efficacy to any hitherto used;—*the Gold Medal, or Thirty Pounds.*

A complete model and description of the apparatus, with certificates of its successful and continued use, to be produced to the Society.

A superior Screw.

229. For a mode of producing a more accurate screw than any hitherto known;—*the Gold Medal, or Thirty Pounds.*

A model or complete drawing and description of the method, with a screw not less than twelve inches in length, to be produced to the Society.

Canal Locks.

230. For a plan of a lock for a canal, by which, on the passing of a boat, less water may be expended than has hitherto been the case, and through which a boat may pass in a time not materially longer than is required for passing locks of the usual construction;—*the Gold Medal, or Fifty Pounds.*

Certificates of the plan having been successfully carried into practice, together with a full description, and drawings or models in illustration of the same, to be sent to the Society.

The same premium is offered for the year 1829.

Passing Boats through Tunnels.

231. For a method, superior to any hitherto known, whereby a boat may be impelled or drawn through a tunnel not having a towing-path;—*the Gold Medal, or Thirty Pounds.*

Conditions the same as the last.

CLASS OF COLONIES AND TRADE.

Claims for the following premiums are to be sent in on or before the second Tuesday in March 1828.

It is absolutely necessary that all statements made by candidates residing in the colonies should be authenticated by the certificates of the governor or secretary of the colony, or by the justices of peace or other competent local authorities.

Curing Mackarel.

232. For the greatest quantity of mackarel, not less in number than ten thousand, cured in the year 1827, in the best manner, and to the satisfaction of the Society, the same being caught in the British or Irish seas, and cured in a British or Irish vessel or port;—*the Gold Isis Medal, or Twenty-five Pounds.*

233. For the next greatest quantity, not less than five thousand;—*the Silver Medal, or Fifteen Pounds.*

A sixteen gallon barrel of the mackarel to be produced to the Society, with certificates that the conditions of the premium have been fulfilled, and that the whole were cured in the same manner as the specimens, together with a full description of the process employed.

The same premiums are extended one year farther, on similar conditions.

N.B. Specimens of cured mackarel, which promise to afford a most valuable article of trade and food, even superior to herrings, have been sent to the Society, and have induced them to turn the attention of the public thereto, by offering the above premiums.

Cachemere Wool.

234. To the person who shall import the greatest quantity of real Cachemere wool, not less than one cwt., freed from the hair, and in a state fit for spinning;—*the Gold Medal.*

Samples of the wool, not less than five pounds weight, with bills of lading and other necessary documents to be produced to the Society.

This premium is continued two years longer on similar conditions.

Importing the Cachemere-shawl Goat.

235. To the person who shall have imported into the United Kingdom, subsequent to the 1st of January, 1826, the greatest number, not fewer than three females and two males, of the real Cachemere-shawl Goat;—*the Gold Medal.*

Certificates that the Goats are of the real Cachemere breed, and that they are in health at the time of making the communication, to be produced to the Society.

This premium is offered also for the years 1829 and 1830.

Nutmegs and Mace.

236. To the person who shall grow the finest sample of nutmegs or mace, of good and merchantable quality, not less than twenty pounds weight, in any part of his Majesty's dominions in the West Indies, or in any British plantation on the coast of Africa, or of the several islands adjacent thereto, or in the island of Sincapore, and equal to those imported from the islands of the East Indies;—*the Gold Medal.*

Satisfactory certificates of the place of growth, with an account of the number of trees, their age, nearly the quantity of fruit on each tree, and the manner of culture, together with samples, to be produced to the Society.

The same premium is offered for the years 1829, 30.

Cinnamon.

237. A premium, similar to the preceding, and on the same conditions, is offered for the growth of cinnamon.

Pepper.

238. To the person who shall, previous to the year 1831, raise, in any of the British West Indian islands or colonies, and shall import the largest quantity, not less than 4 cwt., of good and marketable pepper;—*the Gold Medal, or Fifty Pounds.*

239. For the next greatest quantity, not less than two cwt.;—*the Gold Ceres Medal, or Thirty Pounds.*

Conditions the same as for No. 236.

Vanilla.

240. To the person who shall import from any of the British West Indian islands the greatest quantity of Vanilla beans, the produce of such island or colony, equal in quality to those produced in Poyais and on the coast of Mexico;—*the Gold Ceres Medal.*

Conditions the same as for No. 236.

Annatto.

241. To the person who shall import, from any part of the British settlements in the East Indies, the greatest quantity of annatto, equal to that imported from Spanish America, not less than one cwt.;—*the Gold Medal.*

A quantity of the annatto, not less than ten pounds weight, to be produced to the Society, with proper certificates that the annatto is the produce of such settlement.

West India Indigo.

242. To the person who, in the year 1827, shall raise the greatest quantity of indigo of good quality, not being less than one thousand pounds weight, in the island of Jamaica, or any other British plantation in the West Indies, and shall import the same;—*the Gold Medal, or Fifty Pounds.*

Certificates that the indigo was raised in the colony, together with samples, to be produced to the Society.

Silk.

243. To the person who, in the years 1827 or 8, shall raise in any British colony, and shall import, the greatest quantity of silk proper for manufactures, not less than one hundred pounds weight, from silk worms bred there;—*the Gold Medal, or Fifty Pounds.*

Specimens of the silk, not less than one pound, with an account of the method in which the silk-worms were managed, the kind of mulberry-trees whence they were furnished with food, and particulars respecting the culture of the mulberry-trees for that purpose, to be produced to the Society.

244. For the next greatest quantity, not less than fifty pounds, on similar conditions;—*the Silver Medal, or Twenty Pounds.*

Satisfactory certificates of the several particulars above mentioned, to be delivered to the Society along with the samples required.

The same premiums are specially offered for the colonies of

245—246. The Cape of Good Hope;

247—248. The Mauritius;

249—250. New South Wales.

Short-reeled Brutia Silk.

251. To the person who shall have imported into Great Britain the greatest quantity of Brutia or Levant silk, not less than five bales (heretofore long-reeled), of a reel not more than 75 inches in circumference, so as to be wound by the engines in ordinary use;—*the Gold Isis Medal.*

Proper certificates, with bills of lading, and samples of the silk, to be produced to the Society.

Olive Oil.

252. To the person who shall, in the years 1828 or 1829, manufacture and import the finest specimen of oil, not less than ten gallons, the produce of olives grown in any British colony in Africa or New South Wales;—*the Gold Medal.*

253. For the next greatest quantity, not less than six gallons;—*the Silver Medal.*

Specimens of the oil, not less than two quarts, together with satisfactory certificates, to be produced to the Society.

Wine from New South Wales.

254. To the person who shall import, in the years 1827 or 1828, the finest wine, not less than one pipe, of good marketable quality, made from the produce of vineyards in New South Wales;—*the Gold Medal.*

Samples of the wine, in bottles, bills of lading, and certificates that the wine was made in the colony, to be produced to the Society.

Dried Fruits.

255. To the person who shall prepare and import into Great Britain the greatest quantity, not less than 100lbs. of dried fruits, similar to those now imported from the Mediterranean, of good quality, and the growth of the colony of New South Wales;—*the Gold Ceres Medal.*

Satisfactory certificates that the fruits were grown and prepared in the colony, with samples of the fruits, to be presented to the Society.

This premium is also extended to 1829 and 1830.

The same premium, on similar conditions, is offered for the colonies of—

256. The Cape of Good Hope.

257. The Mauritius.

Cultivation of Tea.

258. To the person who shall grow and prepare the greatest quantity of China tea, of good quality, not being less than 20lbs. weight, in the island of Jamaica, or in any other British West India colony, and shall import the same into Great Britain;—*the Gold Medal, or Fifty Pounds.*

Satisfactory certificates that such tea was grown and prepared in the colony; together with an account of the number of tea-trees, their age, mode of culture, of gathering, drying, and preparing the leaves, and samples of the tea, to be produced to the Society. This premium is also extended to 1829.

The same premium is offered for the colonies of

259. The Cape of Good Hope;

260. The Mauritius;

261. New South Wales; and the British dominions in the East Indies.

China Tea.

262. To the person who shall communicate to the Society, from information obtained in China, the best and most authentic account of the culture of the plant or plants, the leaves of which furnish the different kinds of tea; together with the methods of gathering, drying, and otherwise preparing the leaves;—*the Gold Medal.*

This premium is extended to the years 1829 and 1830.

Cinchona.

263. To the person who shall communicate to the Society the best account of one or more of the species of cinchona, the bark of which is used in medicine, accompanied by specimens of the tree in leaf, flower, and seed; and not less than 10 lbs. of the bark;—*the Gold Medal.*

It would be desirable to have some of the seeds sent over in a state fit for vegetation, for which purpose it is recommended that they should be packed in fresh burnt charcoal powder, and wrapped up in coarse brown paper.

Kali for Barilla.

264. To the person who shall have cultivated, in the Bahama Islands, or any other part of his Majesty's dominions in the West Indies, or in any other British plantation, in the years 1826 or 1827, the greatest quantity of land, not less than two acres, with a kali, equal to the Spanish kali, for the purpose of making barilla;—*the Gold Medal, or Thirty Pounds.*

265. For the next greatest quantity, not less than one acre;—*the Silver Medal, or Fifteen Pounds.*

Certificates of the quantity of land so cultivated, and of the state of the plants at the time of signing such certificates, to be delivered to the Society, with samples of the kali.

The same premiums, on similar conditions, will be given for kali grown in 1828.

Cultivation of Hemp in Upper and Lower Canada, Nova Scotia, and New Brunswick.

266. To the person who shall sow with hemp the greatest quantity of land in the above-mentioned provinces, not less than six arpents, (each four-fifths of a statute acre) in the year 1827 and shall at the proper season cause to be plucked the sum-

mer hemp (or male hemp bearing no seed), and continue the winter hemp (or female hemp bearing seed) on the ground until the seed is ripe;—*the Gold Medal, or Fifty Pounds.*

267. To the person who shall sow with hemp the next greatest quantity of land in the same provinces, not less than five arpents, in the year 1827, in the manner above mentioned;—*the Silver Medal or Twenty-five Pounds.*

Certificates of the number of arpents, the method of culture, of the plucking of the hemp, with a general account whether sown broad-cast or in drills, and of the expense, soil, cultivation, and produce, to be transmitted to the Society, together with 28lbs. of the hemp, and two quarts of the seed.

The same premiums are offered for the year 1828.

Importation of Hemp from Canada, Nova Scotia, and New Brunswick.

268. To the person who shall import to this country the greatest quantity of marketable hemp, not less than one hundred tons, in the year 1828, the produce of Canada, or of one of the above-mentioned provinces;—*the Gold Medal.*

269. To the person who shall import the next greatest quantity, not less than fifty tons;—*the Silver Medal.*

Certificates, satisfactory to the Society, to be produced by the master of the vessel, to testify that such hemp was grown and prepared in Canada, Nova Scotia, or New Brunswick.

The same premiums are offered for the year 1828.

Substitute for Hemp.

270. To the person who, in the years 1826, or 1827, shall raise at the Cape of Good Hope, in New South Wales, or in any of the British colonies, and import, a substitute for hemp, not less than two tons, equally cheap, strong, durable, and applicable to all the purposes for which hemp is now used;—*the Gold Medal, or Fifty Pounds.*

A quantity of the substitute, not less than 20lbs., together with the proper certificates, to be produced to the Society.

The Society particularly direct the attention of the public to the phormium tenax or New Zealand flax.

The same premiums are offered for the year 1828.

China Paper for Copper-plate Printing.

271. To the person who shall communicate to the Society the best account of the process employed in China for the manufacture of paper used in England for copperplate printing, and known by the name of India paper, together with an account of the materials from which such paper is made;—*the Gold Medal, or Fifty Pounds.*

Specimens of the paper, not less than one ream, with samples of the materials in their raw or unmanufactured state, and satisfactory certificates, to be produced to the Society.

Diminution of Human Labour in the Cultivation of Sugar, &c.

272. To the person who shall present to the Society a satisfactory account, founded on experience, of the most advantageous mode of diminishing the labour of persons employed in the cultivation of sugar, cotton, and coffee in the West Indian colonies, by the substitution of agricultural machinery, or by the use of cattle;—*the Gold Medal, or Fifty Pounds.*

Extirpating the Stumps and Roots of Trees.

273. To the person who shall invent and discover to the Society the best method, verified by actual experience, of raising out of the earth and removing the stumps and roots of trees which have been left after felling the timber, so as to clear the land for the purposes of cultivation;—*the Gold Medal, or Fifty Pounds.*

Certificates that the method has succeeded with at least fifty trees of large girth, and a full description of the means employed, to be delivered to the Society.

BRITISH MARBLES.

THE Society, considering that it would be beneficial to the commerce of the United Kingdom to bring the British marbles into general use, and that the most effectual method of accomplishing their object would be, *for the present*, to make them more generally known in the capital, have come to the following resolution:—

That specimens of British marbles be exposed in the Society's room, in the Adelphi, for the inspection of the public under the following regulations:

1st, That all the specimens be exact to a given size, viz. eight inches high, six inches broad, one thick, and polished on one face.

2d, That a book be kept, containing the number of each specimen, and describing the situation of the quarry, the name and situation of the parish, the distance of the quarry from a beaten road, and the distance of that road from water-carriage, with the name of the donor and proprietor. Any remarks on the qualities of the marbles, or on the lime produced from them, will be gratefully received, and preserved by the Society, as materials for future inquiries.

As the exertions of the Society can be generally beneficial only inasmuch as their views are seconded by the public, the Society request, that all proprietors of marble quarries will favour them with a specimen of the marble, worked to the exact size above mentioned, with the description of the quarry as above, that the same may be entered in the book to be preserved for the use of the public. By such arrangements, it is expected, that the interest of the proprietors of the quarries will be promoted, and the use of British marble much extended. A variety are already exhibited in the Society's rooms.

REWARDS

BESTOWED BY THE SOCIETY DURING THE SESSION, 1826—7.

IN AGRICULTURE.

1. To P. Green, Esq. Crookham, Berks, for his waggon for conveying live lambs to market, the Silver Ceres Medal.

2. To Mr. W. Thorold, Great Melton, Norfolk, for his machine for slicing turnips, the Silver Ceres Medal.

3. To W. Withers, jun. Esq. Holt, Norfolk, for his experiments on the effect of manure on young plantations of forest trees, the large Silver Medal.

4. To W. Long, Esq. Preshaw House, near Alton, Hants, for planting 195 acres, with forest trees, the Gold Ceres Medal.

5. To C. C. Western, Esq. M.P. Felix Hall, Kelvedon, Essex, for his long Anglo-merino wool, the Gold Ceres Medal.

6. To Mr. C. Poppy, jun. Witnesham, near Ipswich, for his method of protecting turnips from the fly, the Gold Ceres Medal.

IN MECHANICS.

7. To Mr. W. J. Hood, Lieut. R.N. H.M.S. Hyperion, for his ice saw, the large Silver Medal.

8. To Mr. Jos. Hillman, Royal Dock Yard, Deptford, for his sliding rudder, the large Silver Medal.

9. To Mr. J. Weekes, Royal Dock Yard, Chatham, for his mode of securing the dead eyes of a ship, the large Silver Medal.

10. To Mr. James Hookey, Midshipman, R.N. for his improved ship's log, the large Silver Medal.

11. To Mr. Bothway, Gunner, R.N. Devonport, for his improved cat-block, the Silver Vulcan Medal.

12. To Mr. J. B. Kooystra, Lieut. R.N. for his mode of securing the stopper of a chain cable, the Silver Vulcan Medal.

13. To J. Hawks, Esq. Upper Thames-street, for his revolving light for steam boats, the large Silver Medal.

14. To R. Cowen, Esq. Carlisle, for his syphon for draining stone quarries, &c. the Gold Vulcan Medal.

15. To Mr. J. P. Paine, 39, High-street, Bloomsbury, for his mode of illuminating public clocks, the large Silver Medal.

16. To Mr. G. Smart, Broadstairs, Kent, for his wrought iron trussed girder, the Silver Vulcan Medal.

17. To Mr. W. H. Perkins, Stanstead, Herts, for his improved cap for a malt-kiln, the large Silver Medal.

18. To W. J. Charlton, Esq. the War Office, for his closet for official papers, the Silver Vulcan Medal.

19. To W. Caffin, Esq. Woolwich Common, for his instrument for filling cartridges and measuring wheat, seeds, &c. the large Silver Medal.

20. To Mr. Jonas Thurrell, 2, Little King-street, Camden Town, for his improved mangle, 5*l.*

21. To Mr. Ad. Reid, Woolwich, for his compensation pendulum, 5*l.*

22. To Mr. W. Burn, 37, Kirby-street, Hatton Garden, for his rolling press for bookbinders, the Silver Vulcan Medal.

23. To Mr. G. Machin, Wolverhampton, for his expanding key for a lock, the Silver Vulcan Medal.

24. To Mr. J. Bower, Clerkenwell Green, for his improved lathe chuck, the large Silver Medal.

25. To Mr. J. Packham, Maidstone, for his self-adjusting truss, the Silver Vulcan Medal.

26. To Mr. Geo. Gibson, Crescent, Birmingham, for his types for the use of the blind, the Gold Vulcan Medal.

27. To Don Jaime Isern, for his instrument to enable the blind to write music, the large Silver Medal.

28. To Mr. W. Thorold, Melton, near Wymondham, for his reel for Capt. Manby's apparatus, the Silver Vulcan Medal.

29. To Mr. J. Callaghan, Carlisle-lane, Lambeth, for his face-guard for smelters, &c. 5*l.* 5*s.*

IN POLITE ARTS.

(Class of Nobility.)

30. To Miss Cockburn, St. John's Grove, Regent's Park, for an original portrait in water-colours, the large Silver Medal.

31. To the Hon. Miss Forester, for a copy of figures in water-colours, the Silver Isis Medal.

32. To Miss Long, 52, Montague-square, for a copy in pencil of a landscape, the Silver Palette.

33. To the Hon. Miss C. Turner, Rose Cottage, Regent's Park, for a copy in water colours of flowers, the Silver Palette.

(Honorary Class)—Copies.

34. To Mr. J. Bizo, 6, White Rose Court, Coleman-street, for a drawing in Indian ink of a head, the Silver Isis Medal.

35. To Master H. Crockford, 22, Sussex-place, Regent's-park, for a drawing in pencil of a landscape, the Silver Palette.

36. To Miss Du Pasquier, St. James's Palace, for a drawing in chalk of a head, the Silver Palette.

37. To Miss E. Blair, 39, Welbeck-street, for a drawing in chalk of a head, the Silver Palette.

38. To Miss S. C. Musters, Miss Appleton's, 6, Upper Portland-place, for a drawing in chalk of a head, the Silver Isis Medal.

39. To Miss A. Redaway, 438, Strand, for a drawing in pencil of a landscape, the Silver Palette.

40. To Miss S. Field, Grove Lodge, Lower Tooting, for a drawing in pencil of figures, the large Silver Medal.

41. To Miss M. A. Pillichody de Bavoy, 7, South Crescent, Bedford-square, for a drawing in water colours of a landscape, the Silver Isis Medal.

42. To Miss C. Walker, Blythe Hall, Bawtry, for a drawing in water-colours of a landscape, the Silver Palette.

43. To Miss J. W. Hurlstone, 52, Sloane-street, for a drawing in water-colours of flowers, the Silver Isis Medal.

Drawings from Busts and Statues.

44. To Mr. J. Reeve, 2, Brunswick-street, Blackfriars, for a finished drawing in chalk from a statue, the Silver Isis Medal.

45. To Miss H. Salmon, 86, Piccadilly, for a drawing in chalk from a bust, the large Silver Medal.

Original.

46. To Miss F. Corbaux, 5, Hercules Buildings, Lambeth, for a portrait in miniature, the large Silver Medal.

47. To Miss Mintorn, Woodfield Cot-

tage, Bristol, for a composition in water-colours of fruit and flowers, the Gold Isis Medal.

48. To Miss C. Depree, 6, Mecklenburg-street, for a drawing in water-colours of a flower, the large Silver Medal.

49. To Miss Manning, Norbury Priory, Leatherhead, for an historical composition in oil, the Gold Isis Medal.

(Artists' Class)—Copies.

50. To Mr. George Stodart, 401, Strand, for a drawing in Indian ink of a figure, the Silver Isis Medal.

51. To Miss E. Setchell, 23, King-street, Covent-garden, for a drawing in chalk of a head, the Silver Palette.

52. To Mr. H. Abbot, 35, Southampton-street, Strand, for a drawing in Indian ink of heads, the Silver Palette.

53. To Mr. T. Pitts, 4, Savoy-street, Strand, for a drawing in chalk of a head, the Silver Palette.

54. To Mr. J. Slade, 57, Hatton Garden, for a drawing in pencil of a landscape, the Silver Isis Medal.

55. To Mr. A. Arnald, 2, Weston-street, Pentonville, for a drawing in chalk of animals, the Silver Palette.

56. To Mr. W. A. Crabb, Point Pleasant, Wandsworth, for a drawing in water-colours of flowers, the Silver Palette.

57. To Mr. S. Collins, 31, Cockspur-street, for a portrait in oil, the Silver Isis Medal.

58. To Miss Alabaster, 34, Half-moon-street, Piccadilly, for a portrait in oil, the large Silver Medal.

Drawings from Busts and Statues.

59. To Mr. J. G. Fennell, 18, Webb's County Terrace, Kent Road, for a finished drawing in chalk from a statue, the large Silver Medal.

60. To Mr. M. M. Hart, 33, Gerrard-street, Soho, for an outline in chalk of an entire anatomical figure, the Silver Isis Medal.

61. To Miss C. Derby, 12, Osnaburg-street, New Road, for a drawing in chalk from a bust, the Silver Isis Medal.

Original.

62. To Mr. C. R. Bone, 4, Charlotte-street, Portland Place, for a portrait in miniature, the large Silver Medal.

63. To Miss M. Jones, 8, Coleman-street, for a portrait in miniature, the Silver Isis Medal.

64. To Mr. B. R. Green, 8, South Crescent, Bedford Square, for a portrait in oil, the Silver Isis Medal.

65. To Miss H. Kearsley, 12, Rathbone Place, for a portrait in oil, the large Silver Medal.

66. To Mr. Al. Bower, 6, Charlotte-street, Bloomsbury, for a portrait in oil, the Gold Isis Medal.

67. To Mr. Fr. Lines, Birmingham, for a drawing in pencil of a landscape, the large Silver Medal.

68. To Mr. Edward Stow, 14, King-street, Portman-square, for a landscape in oil, the large Silver Medal.

69. To Mr. R. Clarke, 15, Gloucester-terrace, Vauxhall-road, for a marine painting in oil, the Gold Isis Medal.

70. To Mr. James Walsh, Worton House, Isleworth, for a composition in water colours of flowers, the large Silver Medal.

71. To Mr. T. Brigstoke, 6, Charlotte-street, Bloomsbury, for a painting in oil of still-life, the Silver Isis Medal.

72. To Miss A. Gwennap, 15, Upper Belgrave Place, Pimlico, for a composition in water colours of fruit, the Silver Isis Medal.

73. To Mr. H. Bielfield, 210, Tottenham-court Road, for a design for the Society's vignette, the large Silver Medal.

Models.

74. To Mr. R. Webb, 12, Charles-street, Middlesex Hospital, for a copy in bas relief of an entire figure, the Silver Isis Medal.

75. To Mr. E. Papworth, 16, Caroline-street, Bedford-square, for a copy in bas-relief of an entire figure, the Silver Palette.

76. To Mr. J. Mason, Twickenham, for a copy of a bust from the antique, the Silver Isis Medal.

77. To Mr. W. Wooles, 154, High Holborn, for an original model of an historical group, the large Gold Medal.

78. To Mr. H. Bailes, 434, Oxford-street, for a copy of a figure carved in wood, the Silver Isis Medal.

Architecture.

79. To Mr. T. Atkinson, 8, Upper Stamford-street, for an original composition of architectural ornaments, the large Silver Medal.

80. To Mr. S. Loate, 24, Edward-square, Kensington, for an original design for a metropolitan university, the Gold Isis Medal.

81. To Mr. J. D. Paine, 39, High-street, Bloomsbury, for an original design for a court of justice, the large Silver Medal.

Drawings of Machinery.

82. To Mr. G. H. Phipps, Alfred-

place, Great Surrey-street, for a perspective drawing of a steam engine, the large Silver Medal.

83. To Mr. W. H. Barlow, Rush Grove Cottage, Woolwich, for a perspective drawing of a crane, the Silver Isis Medal.

Etchings and Engravings.

84. To Mr. J. B. Forrest, 46, Dean-street, Soho, for a finished engraving of a portrait, the Silver Isis Medal.

85. To Mr. R. Parr, 18, Southampton-place, Euston-square, for an etching of animals, the large Silver Medal.

86. To Mr. James Eke, 46, Clarendon-square, Somers Town, for an engraving on steel of a cotton machine, the Silver Isis Medal.

Gem Engraving.

87. To Mr. W. Warner, 22, New North-street, Red Lion-square, for an engraving in intaglio of a group, the Gold Isis Medal.

Anatomical Models.

88. To Mr. Joseph Towne, 8, High-street, Borough, for a model in coloured wax of the human brain, the large Gold Medal.

IN CHEMISTRY.

89. To Mr. G. Field, Syon Hill Park, Isleworth, for his colourless lac varnish, £20.

90. To Mr. H. Luning, Apothecaries' Hall, for his colourless lac varnish, £20.

91. To Mr. C. Cameron, Glasgow, for his soda ley for the use of dyers, £5. 5*s*.

The Thanks of the Society have been voted to the following Gentlemen, and their respective communications have been directed to be inserted in the next Volume of the Society's Transactions.

92. To Capt. T. M. Bagnold, for his mode of preparing lime-juice.

93. To J. Houlton, Esq. Grove Place, Lisson Grove, for his mode of preparing vegetable extracts.

IN MANUFACTURES.

94. To Messrs. J. and A. Muir, Greenock, for their hats of British Leghorn, £21.

95. To the same, for their fine plat, £10. 10*s*.

96. To Mr. Jos. Long, Claydon, Suffolk, for fine plat from British materials, £5. 5*s*.

97. To Mr. J. James, James'-street, Lambeth, for his mode of opening horn, the Silver Vulcan Medal and £5. 5*s*.

IN COLONIES AND TRADE.

98. To Fr. Collison, Esq. Cape of Good Hope, for Cape wine of superior quality, the large Gold Medal.

The following Candidates in Polite Arts have had Medals awarded to them, but, by the rules of the Society, are precluded from receiving them, having already had equal or superior rewards in the same departments of Art.

Mr. W. Smith, 21, John-street, Crutched Friars.

Mr. D. Pasmore, Salisbury-court, Fleet-street.

Mr. T. Hughes, 59, Long Acre.

☞ Since the last DISTRIBUTION, 70 new Members have been elected.

By Order, ARTHUR AIKIN, Sec.

T. Woodfall, Printer, Vincent Square, Westminster.

TRANSACTIONS.

AGRICULTURE

I.—FOREST TREES.

The GOLD CERES MEDAL *was this Session presented to* WALTER LONG, *Esq., of Preshaw House, near Alton, Hants, for planting One Hundred and Ninety-five Acres with* FOREST TREES. *The following Communication has been received from the Candidate.*

Preshaw House, near Bishop's Waltham, Hants,
January 22, 1827.

SIR;

ENCOURAGED by the liberal interest which the Society of Arts feel towards gentlemen who have devoted their time and attention to plantations, with a view to raise profitable timber, I have ventured to lay before you some account of my proceedings for the last few years. While thus engaged, I had in view not merely the beauty which, I flatter myself, I shall have added to the surrounding country, but also the expectation of raising a property of considerable value on land, in its previous state not worth more than from five to seven shillings per acre, and the hope, that I might be so fortunate as to obtain the Gold Medal, to hand down to those who succeed me, as a lasting testimony of my labours. But a variety of difficulties of soil and climate, and repeated disappointments from year to year, have occurred to prevent my intruding myself upon the Society in the character of a candidate: by continued perseverance, however, those difficulties have all

been surmounted; nearly two hundred acres of very dry, poor land are now covered with plantations in a very thriving state; and I am not without a sanguine hope that, when the Society have taken all the circumstances hereafter detailed into consideration, and that, one year after the other, I have still procured more and more trees, and in some cases have replanted the same ground three and four times over, they may be disposed to bestow upon me some honorary mark of their approbation.

Previous to the year 1820, I had made some plantations in extent not more than six acres; but, owing to the dryness and shallowness of the soil on a bed of chalk, for four or five years they made so little progress, and looked so very sickly, that at that time I felt little encouragement to persevere. At the end, however, of four or five years, these sickly plantations assumed a very healthy appearance, and the larch and Scotch firs put forth such fine shoots, as to excite the admiration and surprise of many of my neighbours; and so greatly was I struck by it, that all my ardour for planting revived, and I then determined to plant the surrounding high grounds, which are seen from a great distance. In the year 1820, I happened to visit the very extensive plantations of the Duke of Athol, at Dunkeld, and from Messrs. Donaldson, nursery-men at Little Dunkeld, I obtained information as to the mode followed there. I ordered from them a quantity of seedling larch, and hired a man from Scotland, who had been accustomed to the business. In February, 1821, I followed strictly the directions I had received, which were, merely to open the ground in three cuts, with a small triangular, sharp-pointed spade; then, with the instrument, move the ground a little under the sward, and insert the seedling plant. This was done by the Scotsman, Alexander Forbes, over five acres. They were planted with the 12,000 seedling larch, and

13,000 spruce and Scotch fir-seedlings, at 5,000 to the acre, which I received from Messrs. Donaldson. In January and February, 1822, the same plan was followed over about thirty-four acres, and they were planted by Alexander Forbes, and some labourers under him, with 150,000 seedling larch from Messrs. Donaldson. These attempts excited my greatest interest. The trees had been planted in a very shallow soil, and in an exposed climate, upon a plan different from the usual expensive mode of this country, more simple, and at much less cost. I watched the result with anxiety, but it did not succeed. The situation is so high, that from it the whole of the Isle of Wight, and the water between it and the main land is visible at a distance of twenty miles; the soil is hardly three inches in depth from the chalk; but these causes alone would not have defeated me, had there not been a total want of moisture. In Scotland, where the above mode of planting is followed on the high mountains, there are rills of water trickling down, penetrating to the roots of the young seedlings; so that, without being previously bedded in a nursery, the seedlings soon make root, from having moisture to feed upon. Besides this, from the trees not arriving in time from Scotland, it was not possible to plant them till February, which, in this dry soil, is too late: the March winds check them at once. After this disappointment, I had to begin my operations anew, and upon a different system; and whilst I had all the old ground to go over again, I determined (that I might lose no time by my failure) to proceed, the ensuing season, with the new plantations, to the same extent as if I had not failed in the former instance. To guard against further disappointment, I entered into a contract with Mr. Joseph Thompson, a nursery-man near Southampton; he agreed to plant the most proper description of transplanted trees,

at twenty-five shillings a thousand, finding the trees, and paying all the labour, and to replace every failure for the space of three years. On sixty-one acres of land he planted, in October and November, 1822, 37,000 oak, 36,000 Scotch firs, 58,800 larch, 53,600 beech, 1,000 birch, 3,000 Spanish chesnuts, 10,500 spruce firs, 25,000 ash, 1,000 English elm, and 2,000 sycamore, at twenty-five shillings a thousand; in the whole, 227,900 sent; — 27,200 used by Alexander, = 200,700, the quantity used by him in his contract, as is proved by Mr. Thompson's bills, after deducting from his amount, *at twenty-five shillings* the thousand, 40,000 larch and beech beyond this calculation, which were returned. The oak, ash, Spanish chesnut, elm, and sycamore, were planted, mixed with larch and firs, in those lands called Pinlands and Belmores, to the westward, where the soil was deeper, and the grounds more sheltered; and two pieces were planted at first entirely with oak; the higher lands were filled with beech, larch, Scotch and spruce fir, and birch, and, upon the average, contained about 3,500 trees to the acre. The lands called Pinlands and Belmores, to the westward, near the Winchester Road, were small inclosures, surrounded by high woods of beech, oak, &c.; and they were selected for planting, because they were wholly unproductive for corn or grass; the fog or mildew from the woods, and continual shade, rendered the ground sour, and the corn scarcely ever ripened, or even filled the surface of the earth; the grass that grew there was so coarse and sour, that it produced in sheep the disease called the redwater. It therefore can fairly be called land unprofitable for tillage. We pursued what I consider an excellent and economical plan for preparing the land. We ploughed the ground in drills four feet distant from each other, throwing out two furrows from each drill, and getting completely under the soil; the labour-

ers then worked under the surface on each side of the drill with their pick-axes; and when the ground was thus sufficiently moved, the hole was opened, and the tree planted. The ground that has thus been moved, afterwards settles down rather lower than the rest that has not been moved, and this forms a most profitable receptacle for the rain that falls on the surrounding surface, by which means the trees receive more moisture to their roots. The whole of this work was performed with spirit: by having at least sixty hands, we planted five acres a day, and the whole was completed before the frost set in. As soon as these sixty-one acres were finished, I set to work to replant and fill up the ground where the trees had previously failed. Six acres of the field in Rowberries, No. 2, planted in 1821, I had ploughed in drills, in the manner described, and filled with larch, Scotch firs, and beech, three and four feet apart, transplanted trees, and all the rest of the thirty-four acres, previously planted with larch seedlings from Scotland, a detachment of men, under Alexander Forbes, carefully filled up by holing, and in this work used all the Scotch seedlings, pinaster ditto, beech, sycamore, and birch, to the amount of 60,500, charged at a reduced price in Mr. Thompson's bill, and also 27,200 of the transplanted ones, which, in Thompson's bill, were charged at twenty-five shillings, intended for the contract work, but which were used by Alexander Forbes, in the land ploughed in drills in Rowberries, No. 2. Alexander Forbes, in replanting the hills, by holing, used 40,000 Scotch seedlings, 10,000 pinaster seedlings, 800 birch, 6,200 beech, 1,300 Spanish chesnuts, 2,200 sycamore; in all, 60,500, and also 27,200 mixed trees taken from those Mr. Thompson had sent for his own use in the contract, and for which, in his bill, he allowed me ten shillings per thousand for planting. From the experience I had

bought, I prepared about an acre and a quarter of land for a nursery of my own, and then filled it, in the spring of 1823, with 175,000 three-year and two-year seedling larches, spruce, birch, &c., as appear in the bills annexed from Dunkeld, dated November 1822, January 1823, and March 1823. These became exceedingly fine plants, and of more value to me, from being at hand, and becoming well rooted, than any I could purchase. As these were subsequently removed to the plantations, the nursery was refilled, as will appear by Donaldson's yearly bills, and there are about 300,000 trees in it at present.

In November, 1823, I proceeded to plant twenty-three acres in Rowberries, Nos. 3 and 4; rather more than four acres in Salt-lane grounds; about eight acres on the hills, and eighteen acres in Great Hazards, and two grounds in Pinlands, about fifteen acres. These were not made by contract. I purchased of Mr. Thompson 178,000 trees, as appears by his bill, and I took 30,000 of the best three-year seedling larch from my own nursery, and employed my own labourers to plant them, ploughing the drills as before described. I then filled up all the vacancies a *third* time in the Rowberries, No. 2, with larch from my nursery, all the transplanted Scotch firs, previously planted, having failed. Of the new plantations made in November, 1823, all those succeeded well which were planted with the trees from Mr. Thompson's *own* ground near Southampton, and with those from my own nursery. Unfortunately, Mr. Thompson not having enough himself, had provided me with 50,000 larch from Bagshot, and 50,000 larch from the New-forest, and here again I experienced a severe and unexpected disappointment. They nearly all died, and I can only account for it from the poor nature of the black sandy soil of the neighbourhood from whence they came, which had not produced a sufficient quantity of small fibrous roots. The ensuing

season I put the plough between the rows previously planted, ploughed out fresh drills between the old ones, and replanted the whole with larch from the nursery *in that piece*, No. 5, *to the north*, and also No. 6, and the piece Z, by *holing*, in which those unfortunate trees had been used, and then again went over the whole of the plantations, replacing every failure.

In November, 1824, I planted with larch the Upper Holt piece with 5,000 plants from Mr. Page's nursery, near Southampton, and with trees from my nursery, in quantity not less than 4,000 to the acre; seven acres of Hazards were entirely with larch, and three acres of Hazards were planted under the direction and at the *expense* of *Lady Mary Long*, with larch, mixed with Spanish chesnuts, locusts, and planes. The rest of the season was employed in replanting some of the grounds planted by contract by Mr. Thompson, which, after the second year from planting, he did not fill up, and in again, *for the fourth time*, nearly replanting some of the Rowberries first planted in 1821. Mr. Page's bills will show what trees were purchased of him, and Donaldson's bills will prove what a quantity was constantly bedded in the nursery, to succeed those which the foreman had planted out.

In November, 1825, a piece of ground, in continuation of the plantation on the East hill, containing about one acre and a quarter, was very thickly planted with all kinds of fir and birch, and the ground was previously sown with acorns and beech mast. This being intended in that exposed quarter to afford shelter to some farm buildings, I was willing to have another trial of the Scotch firs, and for this purpose, and for again filling up the failures on the same hill, I purchased 15,000 Scotch firs of Mr, Page, which were planted under the direction of Thomas Benett, together

with a vast quantity of larch from the nursery, in replacing failures.

In November, 1826, about 40,000 larch and spruce were removed from my nursery, and planted chiefly in the first plantation made, and in replacing all the failures in the most exposed spots.

Having mentioned that two pieces in Pinlands, marked I and G, were planted entirely with oak, in 1825 I directed Thomas Benett to plant them thickly between the rows of oak with larch, Scotch fir, and black Italian poplar, to assist in drawing on the oaks, which was done, and I have no doubt will increase their growth upwards.

From this statement it will appear, that from the repeated failures alone, I was each year prevented from becoming a candidate for a medal. By six years perseverance, I am now emboldened to lay the circumstances before you, and to add the certificates of Alexander Forbes and Thomas Benett, as to what they did themselves; and those of persons resident near the spot, to testify that the whole of the plantations are now well filled, and in a thriving state, and likely to produce profitable timber. Before I conclude, I would add, that the plantations I first made, I believe in 1812, and which appeared so sickly for four or five years, have produced me, in very moderate thinnings, abundance of useful poles for fencing, rafters, &c., and that some of the best of them have sold for one shilling and six-pence a-piece. Under the trees there is now a thick crop of young ash plants all over the ground, from seed self-sown. Under the shelter of the larch, and Scotch firs, in this plantation of six acres, I last year planted a sufficient quantity of oak, four feet high, for a future crop; and to show how well they prosper under the shelter of these trees, and in a soil enriched by the accumulation of vegetable matter from the droppings of the larch, although only one year planted, their

leaves were this year as large, and as dark in colour, as if they had never been moved. From experience, I am convinced that oaks of four feet high, planted among firs of from twelve to fifteen years growth, will make a more rapid progress, and be better trees, *in a given period*, than if they had been planted at the same time with the firs. I have had also a host of enemies to contend with in hares and rabbits, who have cropped the firs almost immediately after planting, and these from my neighbours' woods, which I could not destroy.

It is impossible exactly to ascertain the number of thousands of larch and spruce every year transplanted out *from* the nursery; but I trust that the bills of Donaldson, Page, and Thompson, will be received as evidence of the number of trees planted and bedded *into* the nursery.

I beg to submit to your notice the number of trees purchased by me for the plantations and the nursery:—

From Mr. Donaldson, at Little Dunkeld, Perthshire,

732,000	larch	seedlings
43,000	Scotch and spruce	seedlings
61,000	birch	seedlings
3,000	silver firs	seedlings
500	horse-chesnuts	
500	Spanish, ditto	
20,000	larch, for which the bill is not sent, now bedded in	
860,000		

From Mr. Thompson, Red Lodge, Southampton,

58,800	larch
59,800	beech
76,000	Scotch firs and seedlings, ditto
Carried over 194,600	

Brought over	194,600	
	10,000	pinasters, seedlings
	37,000	oak
	4,300	Spanish chesnuts
	10,500	spruce firs
	25,000	ash
	1,000	English grafted elm
	4,200	sycamore
	1,800	birch
	288,400	after deducting the 40,000 returned
	162,000	larch
	10,000	spruce
	5,000	oak
	1,000	Spanish chesnut
	178,000	
	288,400	
	466,400	total, Mr. Thompson's.

Of Mr. Page, Southampton,

105,000	larch
15,000	larch
120,000	
14,000	Scotch firs
1,000	tall larch
2,200	black Italian poplar
17,200	
120,000	
137,200	

Donaldson .	860,000	for planting out and for nursery
Thompson .	466,400	
Page . . .	137,200	
	1,463,600	total purchased

ACCOUNTS OF LANDS PLANTED, COPIED FROM THE PLAN.

			a.	r.	p.
Corhampton Parish.					
Little Salt-lane Ground	planted		3	0	0
No. 1 and 2	„	Jan. 1822	7	0	0
Beauworth Parish.					
Rowberry	„	Feb. 1821	5	0	30
Do. No. 1	„	Jan. 1822	13	1	9
Do. No. 2	„	„	10	2	27
Planted in 1821 and Jan. 1822			39	0	26
Upham Parish.					
Pinlands, B, Thompson's Contract .	planted	Nov. 1822	10	2	8
Do. E, Do. Do. .	„	„	1	3	0
Do. I, Do. Do. .	„	„	3	1	0
Do. K, Do. Do. .	„	„	4	1	3
Do. G, Do. Do. .	„	„	1	0	32
Do. M, Do. Do. .	„	„	5	2	9
Do. N, Do. Do. .	„	„	5	1	35
Do. O, Do. Do. .	„	„	6	3	22
Kilmiston Parish.					
Salt-lane Grounds, P, ...	„	„	6	1	1
Do. W, ...	„	„	9	3	12
Corhampton Parish.					
Lower Piece, on the North Hill . .	„	„	6	3	1
One Corner-piece, marked L; this was not contract, but trenched and planted with oak and elm . . .	„	„	1	0	0
			62	3	3

			a.	r.	p.
Beauworth Parish.					
Fisher's Down, or Rowberries, No. 4,	planted	Nov. 1823	8	3	16
Down Piece, or Rowberries, No. 3	„	„	14	1	10
Corhampton Parish.					
Nos. 5 and 6 to the North	„	„	8	0	0
Rookery Piece, marked *t*	„	„	0	2	8
Kilmiston Parish.					
In 18 acres, by Salt-lane, Z	„	„	4	1	5
Upham Parish.					
Great Hazards, P	„	„	18	3	25
Pinlands, C	„	„	6	2	18
Pinlands, D	„	„	8	3	22
			70	1	24
Kilmiston Parish.					
Upper Half Ground, R	„	Nov. 1824	11	2	20
Upham Parish.					
Hazards, Q	„	„	10	1	1
			21	3	21
Corhampton Parish.					
One little Piece to the North	„	Dec. 1825	1	1	37

Totals.

	a.	r.	p.	
1821 and 1822	39	0	26	
1822	62	3	3	
1823	70	1	24	
1824	21	3	21	
1825	1	1	37	
	195	2	31	
	6	0	0	Old Plantations.
	201	2	31	

I have endeavoured to ascertain the total expense of what has been done; and, after every care taken to avoid error, to the best of my knowledge, and as accurately as

I can make it out, the following appears to be correct. There is a small difference in my account of what I have paid to Mr. Thompson and his bill; as it appears in my books, however, that I have paid him rather more, I trust it is of no moment.

Paid	£.	s.	d.
Messrs. Donaldson	131	18	0
Mr. Thompson	438	7	0
Mr. Page	82	17	1
Alexander Forbes, for labour . .	185	16	2
Thomas Benett, for labour . .	177	5	3
Expenses of bedding out in the nursery, weeding, &c. &c. . .	35	15	1
Fencing, banking, and repairing .	44	9	6
Carriage from Scotland, and my team's expenses to and from Southampton with trees . .	20	9	11
	1,116	18	0
Add the expenses of the three acres called Lady Mary Long's Plantation	9	9	0
Total ...	1,126	7	0

Paid by her Ladyship.

	£.	s.	d.
Trees from Mr. Page .	7	10	0
Paid for Labour . .	1	19	0
	9	9	0

Upon the plan which accompanies this, I have given a particular description of the lands and quantities.

In thus taking a review of what has been done for six years, it is possible some small inaccuracies may have

crept in; but I have taken much pains to send as particular and as correct a statement as possible, both as to facts and figures. I send with this (what are, I believe) the usual certificates; and if any further information is required, I shall be happy to forward it to you as well as I am able. After trespassing so long upon your indulgence, I subscribe myself,

Sir,

A. Aikin, Esq. &c. &c. &c.

Secretary, &c. &c. WALTER LONG.

AFFIDAVITS.

THOMAS BENETT, gardener to Walter Long, Esq. at Preshaw House, saith, that he lived as servant to Mr. Long when he first planted, in 1812, or thereabouts, the high plantations of six acres, which are now most prosperous, and that he has remained in his service ever since. That he witnessed the execution and completion of the contract made with Mr. Thompson, in November and December, 1822, and that he can bear testimony that all the trees sent by Mr. Thompson were planted, some in the grounds described in the plan shown to him by Mr. Long, and coloured yellow, denoting the extent of Mr. Thompson's contract, and also some by Alexander Forbes, in filling up vacancies in the plantations made in 1821. That he well knows every piece of ground so planted, and that the plan describes each of them correctly. That in November, 1823, he, with some labourers, was employed in replacing all the failures in the land called the Rowberries, No. 2, and for that purpose he removed a great many thousands of larch from Mr. Long's nursery, but how many he cannot exactly recollect. That in November 1824 he commenced superintending the

whole on a large scale, as Alexander Forbes had done before him. That he planted eleven acres of land, called in the plan Upper Holt Ground, coloured red, with 5,000 larch from Mr. Page's nursery, near Southampton, and with 40,000 larch from Mr. Long's nursery; and ten acres in Hazards, seven acres of it entirely with larch, and three acres with larch mixed with Spanish chesnuts, locusts, and planes. These last three acres were called Lady Mary Long's Plantation; her ladyship having taken the whole management and expense upon herself. To effect this (*exclusive* of the said three acres, for which there was a separate bill and account), 105,000 larch were purchased of Mr. Page, in addition to what trees were fit to be removed from Mr. Long's nursery. About 40,000 of these, and 1,000 from Mr. Long's nursery, were planted in this last ground of seven acres. Thomas Benett moreover saith, that he planted 36,000 larch from the nursery in the vacancies that had occurred in Rowberry, No. 1; that out of the nursery he replanted with larch, in drills ploughed between the former planted rows, the piece on the hill to the most northern point, marked 5 in the plan; that with the residue of the 100,000 larch from Mr. Page, he made out all the failures every where throughout the Pinlands and Hazards, and also replanted with them, in drills, a field, marked N, and coloured yellow; and with 15,000 more larch from Mr. Page, he replanted, in drills between the old rows, the two pieces in Salt-lane, also coloured yellow, which three last-mentioned pieces had been planted by Mr. Thompson in his contract, but were not sufficiently filled with trees, from the numerous failures. The two last pieces are marked H and W. In the same season he also planted 1,000 large larch, and 2,200 black Italian poplars, in the two grounds, G and I, yellow, previously planted with oak only. To these he added some spruce firs, and in the following season a quantity of Scotch firs, to shelter and force up the oaks.

That in November 1825 he planted three acres on the North hill in Corhampton parish, left white on the plan, very thickly with Scotch firs, larch, and birch, the two latter from Mr. Long's nursery, and previously ploughed the whole of the land, and sowed it well with acorns and beech mast, some of which are come up and growing well; and that afterwards he again went over the whole of the plantations, and consumed an immense quantity of larch out of Mr. Long's nursery in making good the failures. That in December 1826, he, with a number of hands, was wholly employed in planting out from the nursery larch and spruce in great quantities over all the plantations on the hills, more especially in the semi-circular piece of thirteen acres, coloured half lilac and half yellow, in Corhampton, in the piece called Upper Holt Ground, coloured red, and in the piece first of all planted, coloured pink; the latter of which being so much cropped by hares and rabbits, he was obliged almost to replant entirely. Thomas Benett further saith, that he has from year to year, since 1823, bedded-in all the plants that came from Scotland, and that the number generally exceeded the quantity named in Messrs. Donaldson's bills. That he has been for three or four years also employed in making numerous ornamental clumps of planting about the Park at Preshaw, and in transplanting large trees out of the full-grown plantations and woods, and also ornamental thorns, in which he has been generally successful; but such works are not considered to belong to the extensive plantations herein-before described. And he further saith, that at present his time is much employed in constantly visiting the said plantations, to see that the fences are in good order, and that no cattle are able to get in.

(Signed)

Sworn before me, one of His Majesty's Justices of the Peace for the County of Southampton, this 26th day of January, 1827.

GRIFFITH COLPOYS.

His ⋈ mark,
THOMAS BENETT.

Alexander Forbes, now bailiff to Richard Shute, Esq. of Blackdown, in the county of Hants, states, that in the year 1820 he was living in the county of Forfar; that he was there engaged by Walter Long, Esq. to go to Preshaw House, in Hampshire, to plant for him; that in the following January and February, he planted for him, in a piece of land in Rowberries, marked pink in the map, 12,000 larch seedlings and 13,000 spruce and Scotch fir seedlings, which had arrived from Scotland; that he planted them with a triangular pointed spade, merely niching them into the ground. Also, that in January and February, 1822, he with some labourers under him planted 150,000 seedling larch in the lands, coloured lilac in the plan, consisting of five pieces, and about thirty-three acres of land. That in consequence of the very numerous failures in these plantations, he in November and December, 1822, filled up the whole of these plantations with the pinaster seedlings, Scotch fir seedlings, and transplanted Scotch fir, beech, and birch, which were sent by Mr. Thompson, the nursery-man; and in the three-acre piece near Salt Lane, he planted a second time larch, sycamore, spruce, beech, and ash; he does not exactly recollect the number of trees used by him, but he remembers that very many thousands were sent for his use in this work, and that those not being sufficient, he had several thousands of the transplanted trees from the bundles which Mr. Thompson had sent for his own contract. He perfectly remembers the contract entered into by Mr. Thompson, and that all the lands coloured yellow in the plan were planted by him with trees, some three, and some four feet apart, under the superintendance of a foreman named Sparry, and the whole contract completed. That in November, 1823, he was employed by Mr. Long, with sixty or eighty labour-

ers, to plant the two pieces of the Rowberries called Downpiece and Fisher's Down; also two pieces on the hill, marked 5 and 6; also a piece of ground near Salt Lane, marked Z, Great Hazards, and two pieces called Inner and Outer Pinlands, D and C on the plan, all coloured brown; that he and the men under him planted in these grounds, containing about seventy acres, according to the best of his recollection, not less than 162,000 larch, 10,000 spruce, 5,000 oaks, and 1,000 Spanish chesnuts, besides about 30,000 fine three-years old larch, which were taken from Mr. Long's nursery, and which he had himself bedded into the said nursery the spring preceding. He also bedded into the nursery all the seedlings which arrived from Scotland in the years 1822 and 1823, the account of which appears in Messrs. Donaldson's bills. That in December, 1824, he was employed in making good numerous failures in the Lower Pinlands, and in the corner-piece, marked No. 6, in Corhampton parish to the north-east. That he has since left Mr. Long's service; but that at the time of making this statement he has viewed the whole of the plantations, and can report them to be now well filled with thriving trees, and well fenced from cattle; and that, on the average, he considers there are *at least* 4,000 prosperous trees on each acre.

Sworn before me, one of his Majesty's Justices of the Peace for the County of Southampton, this 26th day of January, 1827.
GRIFFITH COLPOYS.

ALEXANDER FORBES.

Preshaw, January 26, 1827.

WE, the undersigned Richard Mills and William Goddard, do hereby certify on oath, that on the day preceding the date hereof, we viewed the whole of the lands planted

by Walter Long, Esq., and we do report that the whole of the plantations have been well filled up, and are now full of young healthy trees of various kinds, and in a thriving state, likely to produce profitable timber, and that they are well fenced in, and secured from cattle.

Sworn before me, one of His Majesty's Justices of the Peace for the County of Southampton, this 26th day of January, 1827.
GRIFFITH COLPOYS.

RICHARD MILLS,
Yeoman, Beauworth.
WILLIAM GODDARD,
Land Surveyor, Kilminster.

II.—MANAGEMENT OF PLANTATIONS.

The LARGE SILVER MEDAL *was this Session voted to* W. WITHERS, *Jun. Esq. of Holt, in Norfolk, for the following Communication respecting the* MANAGEMENT *of* PLANTATIONS *of* FOREST TREES.

Holt, Norfolk,
October 28, 1826.

SIR;

THE principal object of the present memoir is to communicate to the Society the result of several experiments on manuring land for forest trees, as well as to demonstrate the absolute necessity of deeply ploughing or trenching land previous to planting, and of keeping it clean and free from weeds, for some years afterwards. I had myself been long satisfied that this latter method was *indispensable* to insure success upon land such as is usually selected for planting, and believed most other planters were of the same opinion; but, notwithstanding all that has been said and written on the subject, and though proofs of the utility of trenching and cleaning,

and of the loss and disappointment attending a contrary practice are daily and hourly presenting themselves to observation, there are great numbers of gentlemen who, with these proofs before their eyes, still persist in attempting to raise plantations by merely digging holes, and putting in the trees, and then leaving them to take their fate amongst the whins, the fern, or the heath; the weeds or other rubbish with which they are surrounded, and by which the more valuable trees are, in most cases, entirely destroyed in a few years. I will now state as concisely as possible the result of my own experience as to the utility of trenching land previously to planting, and of keeping it clean afterwards.

In the year 1811 I planted a piece of land in this parish containing about five acres adjoining my house. I call this plantation No. 1. The land had been recently inclosed under an act of parliament, and at the time I planted it, was covered with heath and whins. I caused large holes to be dug, in which I planted Scotch firs, and a proper assortment of deciduous trees. The firs succeeded pretty well, but the other trees made no progress; and, although I yearly filled up the vacancies occasioned by death and decay, I found at the end of four or five years, that all the trees, except the Scotch firs, with very few exceptions, were dead, or in a dying state. I then had all the ground trenched, and the vacancies filled up with oak, ash, chesnut, elm, and other deciduous trees, and have kept it regularly hoed and free from weeds ever since: the consequence has been, that the last mentioned trees have made such a rapid growth that I have been enabled to clear away the greater part of the firs, and the remainder must be taken out in another year or two, to give room for the other trees. One mountain ash, which had escaped the deadly effect of the heath and whins, gave a decided proof of the advantages of trenching and

cleaning the land. This tree had barely kept alive, not making more than two or three inches of wood in a year; but in the year following the trenching, it threw out two leading shoots, the smallest of which I cut off at the Michaelmas, when it measured six feet two inches, the growth of one year.

In the spring of 1819 I planted another piece, No. 2, containing about half an acre, adjoining No. 1. This land was trenched two feet deep, and has since been kept perfectly clean; and so great is the advantage of preparing the land properly in the *first instance*, that the trees on No. 2 are now much superior to those on No. 1, *planted eight years before*, although the latter have had the benefit of hoeing during the last nine or ten years.

It is worthy of remark, too, that in this last plantation, No. 2, the deciduous trees have far outstripped the Scotch firs in growth; and I believe it is universally the case, that where land is *properly prepared* and *kept clean*, deciduous trees will make much more wood than firs, and that where the hole-digging system is adopted (unless the land is very good), the firs are the only trees that will succeed.

The same year in which my plantation, No. 1, was made, two pieces of land not a hundred yards distant from mine were planted, one by the late Mr. Richard Gurney, and the other by Mr. Hardy. Mr. Gurney's land was ploughed very deep with a four-horse plough; and large holes were dug among the heath in Mr. Hardy's. A good assortment of forest trees was planted in both; but at the expiration of three years, Mr. Hardy, finding many of his trees dead, and the others making little or no progress, *trenched his land*, and filled up the vacancies, and has since kept it *regularly hoed* and clean from weeds. Mr. Gurney's has been entirely neglected, and the heath and whins have been suffered to grow to the

height of several feet. The consequences are, that Mr. Hardy has at this time a fine flourishing plantation, while in Mr. Gurney's (which is divided from Mr. Hardy's by the road only) all the deciduous trees are dead, and nothing remains but Scotch and larch firs.

A plantation made by Mr. Mott, about half a mile further on towards Cromer, where the land was properly ploughed and planted, but has been neglected since, affords another proof of the necessity of cleaning the land, and keeping it clean. The trees have been declining yearly, and nothing now remains but a few scrubby Scotch firs, although an abundance of other trees was originally planted with them.

Different motives operate on gentlemen to prevent their keeping young plantations clean. Some think it not only unnecessary, but injurious, to the young plants; the weeds, they say, keeping the land moist, and shading the roots of the plants from the heat of the sun, while stirring the ground lets in the drought. Others object to the expense (about sixteen shillings an acre per annum for three years), and almost all, I believe, are apprehensive, that by keeping the land free from weeds, the cover for GAME would be destroyed.

As to the first of these objections, nothing can be more palpably erroneous. It is well known that nurserymen spare no pains or expense to keep their ground free from weeds, and gardeners invariably do the same, as the most effectual means of promoting the growth of their plants. It must be evident, that every weed which is suffered to grow, must rob the ground of a portion of food which the plants would otherwise receive; and this is a consideration of the *utmost importance, when it is remembered that, during the first two or three years of the growth of young trees, they must be principally indebted to the superficial soil for their nourishment*; and

moreover, land which is suffered to get hard cannot imbibe so much of the atmospheric moisture as it would receive if the surface were kept in an open and *loose* state by the hoe. It is quite a mistake to suppose that stirring land in dry weather lets in the drought. On the contrary, it is the only effectual means of keeping it in a moist state, the loose mould detached by the hoe operating as a shade upon the soil beneath. Let sand about two inches thick be laid upon a piece of broken ground, and in the hottest weather, moisture will be found below; while the ground adjoining (not shaded by the sand) will, if not pulverised, be hard and dry for nearly a foot in depth; and hoeing produces the same effect as the sand. As to any other shade than that produced by hoeing, the plants want none, and the more powerful the heat of the sun, the faster they will grow, even upon the lightest soils. As to the expense of hoeing, what can be the object of sixteen shillings an acre for three years, compared with the difference in value between fine growing plants of oak, ash, and chesnut, and worthless Scotch firs? Most gentlemen plant for future profit: planting, we all know, cannot be done in the *worst* manner without expense, and if the extra cost, which *insures* a profitable crop be spared, the object is entirely defeated, and the money which is expended wholly thrown away. It would be quite as reasonable for a farmer to incur all the cost of preparing his land for turnips, and then to lose his crop, rather than be at the expense of hoeing it, as it is for a gentleman to lay out his money in putting trees into the ground, and then omitting to expend such an *additional* sum as is *absolutely necessary* to make them productive.

The objection about game is quite as untenable as the others. I admit that heath and whins will afford better

cover than land in a clean state, but this will not last many years under Scotch firs, which, it is well known, will destroy all vegetation beneath them. A good permanent cover is not to be had in a plantation without *underwood*, and this cannot be made to grow among heath and whins, nor unless the ground be kept perfectly clean. To hoe young plantations is, therefore, not less necessary to obtain a good cover for game, than it is to ensure a profitable crop of timber.

I have hitherto confined my observations to cases in my own neighbourhood; but I could cite numerous other instances even there, as in other parts of the kingdom, of the total failure of plantations for want of trenching and cleaning, and of the success of others where that mode of planting and keeping the land clean has been adopted: indeed, a volume might soon be filled on the subject. The first person, I believe, who introduced the hoe into young plantations in this county was my friend Mr. Sandys, of Wells, next the sea, who began to plant upon the Holkham estate for Mr. Coke, about forty-six years ago, and who has succeeded in raising for that gentleman, and upon a *poor* soil, nearly one thousand acres of the most flourishing and valuable trees in the kingdom: but I sincerely believe that *if these trees had been assisted in their early growth by manure*, Mr. Coke's estate would have been worth at least *one hundred thousand pounds more* than it now is. This may be regarded as a bold assertion, but I am convinced that the estimate is below the mark. These plantations are from twenty-four to forty-six years old, which gives an average of thirty-five years; and if we add only three pounds an acre per annum for that period, for *extra* growth, in consequence of manure (which is a mere trifle, compared with the actual increase), it will amount to more than

one hundred pounds an acre.* From Mr. Sandys I first learnt the necessity of trenching and cleaning land for trees, and the reasons which I have before urged to show

---

* Three pounds an acre is only 4½*d.* per rod, which the experienced observer will consider much under the annual difference between fast and slow growing trees.

Since writing the above, I have been favoured by a friend with the 26th volume of the Transactions of the Society, containing a communication from Mr. Charles Waistell, and several ingenious tables constructed by him for showing the progressive annual increase in the growth of trees. Mr. Waistell states, from his own experience, from the best information he could obtain of his acquaintance, and from various authors, that the increase in the circumference of trees is generally from one to two inches annually, and from twelve to eighteen inches the annual increase in height. Now, if trees planted upon poor land, without manure, will annually increase twelve inches in height and one inch in circumference, it may, I think, be fairly assumed, that upon land *well manured,* they will increase annually at least eighteen inches in height, and two inches in circumference. The latter growth will produce six times as much timber in any given period as the former. A tree thirty-six years of age, growing twelve inches annually in height, and one inch in circumference, will contain only five feet and nine parts of an inch of timber [*vide* Appendix, Table 1]; whereas, when growing at the rate of eighteen inches in height and two inches in circumference, it will contain thirty feet, four inches, and six parts of an inch [Appendix, Table 2]. Some of the tables show the number of trees to be cut out in the thinning of woods, and the number left standing at every period of four years, from twenty up to sixty-four years, and the number of feet they will respectively contain at those periods. From these tables it appears that if trees annually increase twelve inches in height, and one inch in circumference, there should be cut out per acre,

Table No. 3.	*Trees.*		*Feet.*
During thirty-six years .	1,882	containing	3,036
and left standing	840	containing	4,252
	2,722		7,288

that necessity have been mostly derived from him; and I think it no more than just to offer this testimony to the merit of a gentleman, who is no less distinguished

---

while the contents of trees taken out and left standing in woods, which have increased at the rate of eighteen inches in height, and two inches in circumference will, for the same period, be as follows :—

TABLE No. 5.	*Trees.*		*Feet.*
Taken out .	2,349	containing	10,855
Standing ..	373	containing	11,314
	2,722		22,169
			7,288
Making a difference *per acre*, from *extra* growth, in thirty-six years, of			14,881 feet of timber.

If the calculation be pursued for the whole period of sixty-four years, the result will be as follows :—

	[See Table No. 3.] *Feet.*	[See Table No. 5.] *Feet.*
Contents of trees cut down in sixty years	8,897	26,429
Do. of trees left standing for sixty-four years . ..	7,537	20,138
	16,434	46,567
Difference in favour of No. 5 .	30,133 feet of timber per acre.	
	46,567	

I assume, as a fact proved by my own experience, that the difference in the growth of trees manured and not manured very considerably exceeds six inches in a year. The trees in Mr. Coke's 1,000 acres of plantation may or may not have averaged in growth more than twelve inches yearly; but supposing they have not made more than twelve inches, when if manured they would have made eighteen (and I am of opinion that, whatever their growth may have been, the difference would in proportion be equally great), Mr. Coke's loss by not manuring his land will be far beyond the estimate I have made in the text. His trees have, on an average, been planted nearly thirty-six years. Now, at the end of that

for his ability as a planter, than he is for the taste which he uniformly displays as a landscape gardener, in ornamenting and beautifying gentlemen's estates.

I will now proceed to show the effect of MANURE upon the growth of forest trees. In the year 1818 I purchased about an acre of land, No. 3, adjoining the plantation, No. 1. This land was originally heath, and was allotted under the Act of Parliament before-mentioned, but instead of being planted, was cultivated and cropped with corn and other agricultural crops, and when I took it, was in a *rich state*. I converted the greater part into a garden, and planted about one rood with forest trees, having first trenched the land about two feet deep, and have since kept it thoroughly clean from weeds. These trees are now in the most prosperous state, and, taken altogether, far *exceed* those adjoining, which *were planted seven years before*, and are also much better than the plantation No. 2, which was made *without manure*, in the year following, making every allowance for the additional growth of one year. Some of the oaks are twenty feet in height, and

---

period, it will appear by reference to Mr. Walstell's tables in the Appendix, that if these trees had made twelve inches in height yearly, he should have cut 3,036 feet of timber *per acre*, and have left standing 4,250 feet; but if they had made eighteen inches per year, instead of twelve, he might have cut 10,855 feet of timber *per acre*, and have had now remaining 11,314 feet. The *extra* produce of the 1,000 acres would therefore have been 14,881,000 feet of timber, which, at one shilling only per foot (and the least valuable timber sells at a higher price), would amount to the enormous sum of 744,050*l*. Surely these calculations are worthy of the consideration of those who are desirous of finding *profitable* employment for the poor. Might not the public forests, and the vast tracts of waste land throughout the kingdom, by the judicious application of the unemployed manual strength of the country, be made an inexhaustible source of national and individual wealth?

measure eighteen inches round at the bottom, and the other trees are equally good.

In the same year (1818) I planted several trees in borders well prepared near my house, No. 4, and being intended for ornament and shelter, more than ordinary pains were bestowed upon them. This labour they have amply repaid. There are elms, oaks, and locusts, from nineteen to twenty-eight feet high, and which girt in proportion; while trees of the same description, planted at the same time upon adjoining borders not so well prepared, are not near the size.

In 1820 I purchased some more heath-land near the above-mentioned. I caused the heath or ling to be pared off and burnt in the method recommended by Mr. Cobbett in his "Year's Residence in America;" and in the following year I planted about twelve acres with forest trees. Upon part of this twelve acres, No. 5, I had the flag-ashes spread before the trees were planted, and removed the ashes from the remaining part. The first year the trees upon the land where the ashes had been spread, showed a most decided superiority over the trees where the ashes had been removed, No. 6, and the difference *has become more manifest every succeeding year*. It is now, indeed, so very great, that it is scarcely credible it should have been produced by such a cause only, but such is the fact, the land being precisely of the same quality, treated in every respect in the same way, except as to the ashes, and planted at the same time with the same kinds of trees. The trees on the one part are nine or ten feet high, and so close together, that they must be pruned and thinned considerably this year, while those on the other part are not more than three or four feet in height, and they by no means cover the ground; and I verily believe that the former will be better at ten years old, than the latter will at twenty or twenty-five. In order, however, to enable the

Society to form their own judgment on the subject, I send specimens of the trees from both parts of the plantation.

Upon another part of the above twelve acres, *from which the flag-ashes were removed*, No. 7, I spread some marle and brick earth, and the trees there grow quite as vigorously as those which had the benefit of the flag-ashes; and from this circumstance I am convinced that marle or brick earth is very serviceable in promoting the growth of trees upon poor light soils. Specimens of these trees are also sent.

Having thus witnessed the efficacy of manure in the several instances before-mentioned, I determined never to plant another tree without first manuring the ground. In the summer of 1823 I hired some heath-land, No. 8, of the Fishmongers' Company of London, for forty years, under an agreement to plant fifteen acres, having the benefit of the plantation during the term, but leaving the Company one hundred trees an acre at the end of it. It was obvious that the faster I could make the trees grow, the better they would pay me, and with the above experience before me, I resolved to manure the land with both marle and muck. I caused the land to be double ploughed, first with two horses, and then with four, following in the same furrow; by which means the soil was stirred to the depth of eighteen or twenty inches. I fortunately found the remains of an old marle-pit in the piece, from which I barrowed and spread twenty cart-loads per acre. This I suffered to lie and pulverize all winter, and in the following spring (viz. in April, 1824), I carried on and spread twenty loads per acre of good rotten muck, ploughed it in, and planted the trees, which consisted of oak, ash, elm, chesnut, and black Italian poplar, with a few of other sorts.

They took exceedingly well, and many of them made vigorous shoots the first summer; the second year they nearly covered the ground; but during this summer their

growth has been prodigious; many of the ash trees have made shoots upwards of five feet long; and, upon an average, I think, both they and the oaks have increased this year full three feet in height. The chesnuts have not done so well, but the poplars have made such progress, that they have actually the appearance of trees eight or nine years old. The severe drought which has burnt up trees on land in a poor and foul state, has had the effect of adding considerably to the growth of these. They have never had the appearance of wanting moisture, although not a drop of rain fell upon them for a period of several weeks, during the very hottest part of the summer. This luxuriant growth I attribute to the deep ploughing, to the highly-manured state of the land, and to its being constantly kept clean and loose upon the surface, by means of the hoe; and I firmly believe that when land is in this state, the weather in England can never be too hot for forest trees.

It is necessary to say something about the expense of doing this, as I am aware that an objection would be raised on that ground by almost every gentleman to whom this mode of planting might be recommended. With the view of exciting attention to the subject, I have put up a board in the plantation by the road-side, enumerating all the particulars, which I will here copy:—

"Experimental plantation, showing the effect of manuring land for forest trees. Planted in April, 1824:

"*Cost per Acre.*	£.	s.	d.
"20 loads of marle, at 15*d.*	1	5	0
20 ditto of muck, at 5*s.*	5	0	0
Ploughing the land	1	0	0
Trees, carriage, and planting	7	10	0
Total cost per acre	14	15	0"

The ploughing I think I have put 10*s.* too low, and therefore the total cost per acre may be stated at 15*l.* 5*s.*

This may and will be thought by many to be a great sum; but a nursery-man will not plant with *good* trees, and fill up for three years, under 10*l.* an acre, *exclusive of ploughing;* and observe, that *when you manure,* you never want to fill up, for all the trees are sure to take, and instead of filling up you may, after the third year, take out and transplant at least a tenth part of them. Look, too, at the rapid manner in which the trees grow, and how much more quickly you get a plantation into a *paying state,* than you do when trees are planted without manure. I know hundreds of acres of land, which were planted from fifteen to twenty years ago at an expense of more than 10*l.* an acre, the trees on which would not now be valued at the original cost of planting them, whereas, had one-third more been expended in manuring and properly preparing the land, they would have been worth from 50*l.* to 100*l.* an acre.

A regard to economy in planting is sometimes carried to too great a length. A gentleman (Admiral Windham) about eight miles from me, planted in the same year in which I planted part of No. 8 (1824) forty acres of land upon a cheap plan. Some Scotchmen persuaded him, that neither trenching, nor ploughing, nor cleaning, was necessary; that just to raise a flag, by making a triangular incision, and putting in a seedling plant, and pressing it down with the foot, was quite sufficient to raise in quick time a flourishing and valuable plantation; and that as to the grass and weeds, they would keep the trees warm, and also keep out the drought; they would, in fact, be a source both of heat and moisture; and all this was to be done for 3*l.* 10*s.* an acre. Most gentlemen are disposed to listen to any proposal for doing work cheaply, accordingly the Scotchmen were employed, and planted the

forty acres. But the plantation is a *total failure;* the trees (that is, such of them as are alive) are almost entirely choked with grass and weeds, and are literally worth nothing. The sum of 3*l.* 10*s.* an acre, amounting altogether to 140*l.*, is therefore as completely thrown away as if it had been cast into the sea. Besides the loss of the money, there is the loss of time (which cannot be recovered), the rent of the land, if it were worth any thing, and the mortification of having a favourite object defeated; and to all this gentlemen expose themselves by attempting to effect improvements parsimoniously.

Farmers of poor land generally fall into the same error. They do not perceive, or are unwilling to believe, that it is the trifling expense of a little *extra* manure, that occasions all the difference, upon this sort of land, between an abundant and a short crop; but that such is the case, I have frequently observed in my own immediate neighbourhood. I have myself grown upon poor heath-land nine and ten coombs, and in one instance, eleven coombs and two bushels of wheat an acre, while the adjoining lands of the same description and quality have never exceeded six, and this has been effected merely by laying on an additional quantity of eight loads of muck per acre. My neighbour has put on twelve, and I twenty loads per acre; he has grown six coombs, and I have grown ten. It does not appear to be considered, that in high farming, the muck is the *only* additional part of the expense; the tillage, seed-corn, rent, poor-rates, and labour, being the same, whether you grow six coombs or ten. The same observations will apply to trees, which are sure to pay for all the *extra* cost and labour bestowed upon them.

I cannot conclude without stating a circumstance which exemplifies, in the strongest manner, the power of manure, when applied to a naturally fast-growing tree. I allude to the LOCUST, one of which I planted upon a border in

plantation No. 1, in the year 1821, and being intended for ornament, it was planted with *manure*. In 1824 I cut it down, and in the following year it threw out several shoots, one of which, at the Autumn, measured *ten feet* in height. The following year it increased six feet, and measured six inches round at the bottom; but the upper branch having been blown off, I cut the tree down, and sent it to Mr. Cobbett, at 183, Fleet-street, whom I have requested to send it to the Society.

This year I cut down another *locust*, which was planted *with manure*, at the same time, upon a *soil still worse*, one of the shoots from which has grown to the astonishing length of eleven feet. This I have also sent to the Society.

The success of a plantation almost entirely depends upon the trees being well *set off*. On good land this will be the case without any other assistance than trenching and cleaning; but on poor land, MANURE also is necessary. This will enable the plants to strike out numerous and vigorous roots, by which their food is obtained. I am aware that an opinion is entertained, that plants receive a considerable part of their nourishment from the air; but if this be so, it can only be through the medium of their branches and leaves, as being so many channels or vehicles through which that nourishment is conveyed or imbibed; and if manure increases the size and number of these branches and leaves, as it certainly does, it follows, that plants are thereby furnished with additional means of obtaining food; it being obvious, that a tree with luxuriant branches must possess the power of taking up food from the atmosphere in a much greater degree than a feeble plant, with but little wood and few leaves; and therefore manure is equally beneficial to plants, whether they derive their nourishment partly from the air, or wholly from the soil,

Considering the zeal and expense with which all agricultural improvements have been adopted and pursued, it is rather surprising that gentlemen should have devoted so little of their money and attention to the no less important science of planting, and stimulating the growth of, forest trees; but this lukewarmness may, to a certain extent, be accounted for. Most gentlemen are induced to plant as *cheaply* as possible, under the impression that they are *sinking money for the benefit of their posterity*, or that the *period of return is so remote and uncertain*, that it is scarcely equivalent to the expense they have parsimoniously prevailed on themselves to bestow; but if they could once be convinced, that by a more *liberal* expenditure they might themselves obtain a speedy and certain return, one of the great obstacles to an improved and profitable mode of planting would be removed, and we might hope to see the country again enriched and embellished, as it evidently was in former times, by forests of oak, and other valuable timber, instead of witnessing, as we now do, innumerable tracts covered with perishable firs, which are worthless, in comparison with other trees, and repulsive to the eye of taste. I am the more inclined to indulge in this anticipation, and to believe that so desirable an event will happen, if the prejudices and opinions which I have alluded to be removed, from the circumstance, that most gentlemen are in the habit of adopting the mode of culture I recommend upon other occasions. No one thinks of planting fruit trees, even in a garden, without manure, and no good farmer attempts to raise a fence upon ordinary land, without mucking it at the time he plants the layer. Fences so raised will make greater progress in one year, than they will in three without manure; and there is no reason why the same stimulus should not prove equally beneficial when applied to forest trees. I hope, however, that some gentleman,

with better means than I possess, will give the experiment a fair trial upon a large scale. It may be difficult in some situations to obtain sufficient muck, and it is therefore deserving of consideration, whether artificial manures will not answer the purpose: I am of opinion that they will; but I intend to try some experiments on the subject in the ensuing season, the result of which I will communicate to the public,

I am, Sir,

A. Aikin, Esq. &c. &c. &c.

Secretary, &c. &c. W. WITHERS, Jun.

APPENDIX.

[This is necessarily given in a separate form; but is here inserted.]

III.—LONG ANGLO-MERINO WOOL.

The GOLD CERES MEDAL *was this Session presented to* CHARLES CALLIS WESTERN, *Esq. M. P., of Felix Hall, near Kelvedon, Essex, for his* LONG *and* FINE ANGLO-MERINO WOOL. *The following Communication has been received from him on the subject.*

SIR; Felix Hall, January 1, 1827.

I BEG you to lay before the Society some samples I inclose of *Merino* wool: one or two of them are exceedingly curious, and the whole of them, I think, afford proof of the possibility of drawing advantageous results from the cultivation and improvement of this valuable breed of sheep.

The wool in No. 1 will be of three years growth next clipping time; I took it off myself this morning from the backs of two wether sheep. I drew it from the skin with quite as much difficulty as if it had only been of one year's growth, and with as much pain to the animals; they seem to be, if any thing, more sensitive under the extraction; they will be three years old next lambing-time; they are fat, and I estimate the weight of their carcases, if killed now, at nine stone each. You will observe the strength and elasticity of the wool, and the impossibility of discovering any difference in each successive year's growth. I estimate the weight of one fleece at twenty-five pounds, the other at twenty-eight or thirty in the grease; they will have been in the house two years next clipping time. Their food has been, according to the season of the year, tares and clover, green grass-hay, turnips, mangel-wurzel, and oats.

I sent two wether sheep to London the other day, the

fleece of one of which was of three years' growth, and weighs twenty-six pounds, and which shall be laid before the Society if desired. These sheep would have been four years old next Spring: the particulars of their weight are as follows.

	st.	lbs.	st.	lbs.
The two sheep alive .	17	1		
	17	6		
			34	7
The two do. dead . .	11	4		
	10	5		
			22	1
Rough fat			3	3½
Two skins			3	2½
Two heads			1	0
Two intestines			2	4½
Two plucks			0	6
Blood			1	1½

	st.	lbs.		
The two carcases . .	11	4		
	10	5		
	22	1	. . at 6*s*. .	£.6 12*s*. 9*d*.

No. 2 contains the wool of six different sheep, which will be two years growth next clipping time. The sheep now coming two years old, they will have been one year in the house next clipping time: this wool, I apprehend, will be quite long enough for combing without any waste whatever, as the additional growth from that time to next June will be very great.

No. 3 contains the wool from four ram lambs, got by a prime Saxon ram out of picked Merino ewes of my stock. They will, I have no doubt, be long enough for combing; there will be some waste, though not much, as they were very early lambed, and I expect the staple will

be very long before they will be clipped, and quality particularly good.

I inclose some specimens of manufacture also from my wool: the thread was spun by Mr. Wood, of Bradford, Yorkshire, and afterwards wove by Messrs. Oxley, of Norwich. These were made by them, upon experiment, with a little admixture of silk. Four beautiful robes, according to these patterns, were finished, which I presented to the Duchess of Gloucester, the Dowager Ladies Londonderry and Melville, and Lady Petre, and they were greatly admired. An infinite variety of articles are, however, made now of fine wool combed. Messrs. Fryers, whose warehouse is in Bridge Street, Blackfriars, manufacture very largely. I think the wools they make use of, are first crosses of our fine-wool sheep, and Merinos, some few from Anglo-Merino, the first clip; great improvements are making, in order to comb shorter wool than could formerly be so treated; but the longer the staple, the better for that purpose.

I also inclose a letter I published on the subject of Merino sheep, three years ago, to which I have little to add, except that I am still further confirmed in the correctness of the statements therein made, and find an annual improvement in the wool and carcase of the sheep. I am more and more convinced I am right in the object at which I aim, that of growing long, fine, strong, Merino wool for combing. I am satisfied it is practicable, that the farmer who applies attention and skill to this object, will find an adequate return in the sale of wool and mutton, which latter will meet as ready sale as any other breed of sheep, and a better price by the pound than the larger and coarse sorts.

I have already stated in that publication, that I neither expect nor wish that these sheep should supersede any of our most valuable breeds, but I think there is ample

room for their introduction, that the wool opens a new field for our manufacturers, and that the judicious crossing of the improved Anglo-Merino sheep with our native breeds may very much improve the general quality of our home-grown wools, and consequently, the value of our woollen manufactures.

At the period of the lowest depression of the wool-trade last year, I sold to Mr. Legge, wool-stapler, Bermondsey Street, at 14*d.* per pound, in the grease. The weights of this year's clip were rather below the average in my printed letter. The crop of wool varies with seasons, sometimes nearly a pound per head, but frequently half a pound between the different years' clip. The three preceding years I sold to Mr. Wood, of Bradford, Yorkshire, at 1*s.* 6*d.* per pound.

It does not occur to me, that any further particulars will be required by the Society; but if any more detailed information is desired, I shall be ready to supply it. The growth of fine long wool for combing, and good mutton at the same time, are the objects I aim at, which I have shown to be practicable, and which I think important, whether as relating to agriculture or manufactures: this wool is to be obtained by selecting and breeding from individuals, the staple of the wool of which is the longest, and in some cases, and for particular objects of manufacture, carrying on the fleece a second year; and they must be well fed, not higher than prudence, however, in my opinion, requires that all other breeds of sheep ought to be.

The Society, I believe, has directed its views to the encouragement of irrigation; and I beg leave, in consequence, to inform you, that I have irrigated about forty acres, with the greatest success. I shall be happy to furnish such particulars as the Society may require, and it is in my power to give; and I venture to send a short prac-

tical treatise I published in 1824, on the improvement of grass land by means of irrigation, winter floodings, and drainage. It will be seen at once that I address myself to farmers in a country where irrigation is quite unknown, and the uses of water wholly disregarded.

One meadow of fifteen acres is irrigated by the head-water of a mill, which I take only when the miller would otherwise let it go by, and in the winter, or particular periods, when the millers are glad to be relieved from the pressure of too great a quantity. It is at these moments that the water is most valuable, and they occur quite often enough, where the rivers are considerable, to make the finest irrigated meadows possible. I was, of course, obliged to construct a tunnel, to carry the head-water on to my meadow, which will generally be necessary, the length and diameter of it more or less, according to circumstances; but by such means the irrigation of meadows might be general along the whole line of a river, if an arrangement with the millers could be made for that purpose. I am convinced, that in this instance, that is to say upon the Black-water river, which empties itself at Maldon, the water which the millers would be desirous to get rid of, would, in all cases, amply repay all the expenses attendant upon forming the meadows properly to receive it; the advantages would also suffice to pay any moderate recompence to the millers.

The experience I have had of the benefits of irrigation (my meadows having been completed above ten years) convince me that it is utterly impossible to apply capital to the improvement of land in any way so profitably as by the means of irrigation, and the application of water in all the various ways in which it may be used.

I am, Sir,

A. Aikin, Esq. &c. &c. &c.

Secretary, &c. &c. CHARLES C. WESTERN.

Society of Arts, &c. Adelphi,
February 3, 1827.

SIR;

I am directed to acknowledge the receipt of a copy of your pamphlet, and also of your communication respecting the growth of long wool on Merino sheep.

Your letter and accompanying samples have been laid before the Committee of Agriculture, who will be glad to receive any additional information on the subject that you may have to communicate.

It is, I believe, the general opinion, that if a sheep is not sheared, the wool will come off spontaneously in the course of the summer; and every one must have observed, that the fleece of sheep kept on commons, or poor hilly pastures, becomes ragged, and separates in flakes a little previous to shearing time. It is also well known, that in Iceland, and I believe in Shetland, the sheep are never sheared, but the wool is pulled off by hand, when it has become loose. In your Merinos it is evident that this annual casting of the coat does not take place. Does this happen also with Merinos treated in the usual manner, and with the other improved breeds of English sheep, or is it a consequence of the housing or cotting system adopted by you, and long since practised with the fine short-woolled sheep of Saxony?

Can you furnish us with a statement of the expenses and profits of housed sheep, comparatively with those of sheep treated in the ordinary manner? The expenses are, the erection of cots, the cutting and carrying roots and green crops for food, the increased proportion of hay and other dry food which the cotting system requires, the carting of the manure, the loss of two years' interest on the price of the first clip, and of one year's interest on the second. The advantages appear to be, a more economical consumption of the roots and green crops, an

increased quantity of manure, the difference in cost between three yearly shearings and one triennial shearing, and the gain, if any, on one fleece of long fine wool, as compared with that on three fleeces of short fine wool. Probably, also, fewer lambs would be lost, and the flock in general would be healthier when cotted than when managed in the usual manner.

Have you any experience on the advantages of salt mixed with the food of sheep? It is largely used for this purpose both in Saxony and Spain, and the health of the animals is said to be much promoted hereby.

When raw wool was the great article of export from England to the Low Countries, the best was that produced in the hilly parts of Shropshire, Worcestershire, Herefordshire, and Gloucestershire. It appears to me very probable that in this district the system of cotting was largely, if not universally, practised, being probably originally adopted as a protection from wolves and other wild animals, as well as from robbers, which long infested these borders of England and Wales. The reason of this my opinion is the frequent occurrence of the word cote or cot, as a termination to the names of villages and hills, in such parts of this district as I am acquainted with. Thus in Longmont forest, in Shropshire, the northern extremity of this district, there are the villages and hamlets of Medlicot, Batchcot, Ascot, Sibberscot, Westcot, Picklescot, Whitcot, &c.; and in the southern extremity, the Cotswold. In other parts of the country also, the word cot occurs, though not so frequently as in that stated above.

I am, Sir,
&c. &c, &c.
ARTHUR AIKIN,
Secretary.

C. C. Western, Esq.

Sir; Felix Hall, February 9, 1827.

I have received your letter of yesterday's date. The principal object that I had in view was, to make known the curious fact, that the animal will carry its fleece, in all its strength and beauty, three years; and hoped that the knowledge of it might induce others to aid the experiment. I have produced the article, such as never was seen or contemplated before, most people supposing, as you did, that sheep shed their fleece every year; and I have given you the butcher's return of the carcass.* The manufacturers must decide the value of the wool: when that is ascertained, farmers will learn the expense of cotting, &c. comparatively with out-door grazing. Let it be understood, however, that I do not propose the wool should be more than two years' growth, which would require, therefore, only one year's cotting, and that the number so cotted should form only a part of the flock, according as was convenient, and that these should be wethers, put up at about sixteen or eighteen months old, and shorn at twenty-eight or thirty months old, when they would be ready for slaughter also: and these should be selected from the wether flock for their wool, taking those best adapted. I am afraid the Committee did not understand my statements, probably for want of clearness in my manner. I meant to say, that I thought the powers thus shown by the animal to grow such a fleece, and at the same time yield such a carcass of mutton, were circumstances sufficiently curious to warrant my laying the information before the Society, and that I thought the new article might be serviceable for some of the finest of our fancy articles of manufacture, in which the French

* For the excellence of the carcass, I refer to Mr. Hudson, of Bond Street.

have excelled us: and I sent accordingly two or three specimens of China crape,* made of fine Spanish wool, grown by me, and manufactured at Norwich. As to the treatment of the flock at large, I have stated my opinion upon what I think sufficient grounds, that in consequence of the excellence of our pastures in England, and our extensive turnip husbandry, and the universal taste for fat meat, we might here exclusively grow a long, strong, and fine wool, as we have exclusively grown, and I believe shall exclusively continue to grow, the long coarse wools; for unless sheep are well fed, it is impossible to grow wool long and strong. The French are importing our long-woolled sheep, and South Down, and a society is formed in Paris for the improvement of their wools. They may grow the South Down; but unless they keep the sheep higher, the long wool will become brittle immediately, and very soon shorter, and inferior in quality for combing. I sell my wool now annually for combing purposes. An intelligent manufacturer whom I saw at Bath the other day, said, he thought it might also be found particularly useful for the warp to take the finest Saxon upon in the woof. Upon the whole, my object is, to draw the attention of landowners and manufacturers to an inquiry into the practicability of producing a most valuable and novel raw article of manufacture, and to give them such evidence of probable success as shall warrant their giving the subject some portion of their time and their thoughts.

You ask if I give salt to my sheep? I give them all they will eat; in the Spring, when the ewes and lambs are feeding in the water-meadows, they eat a great quantity. I can have no doubt of its salutary effects.

---

* Imitation of China crape, made from picked wool of one year's growth.

I gave you as full an account as I could of my water-meadows, &c.

I am, Sir,

A. Aikin, Esq. &c. &c. &c.

Secretary, &c. &c. CHARLES C. WESTERN.

P. S.—I cannot tell whether the sheep of this country shed their wools; but I will make a trial of it. I cannot think the difference of feed, or that cotting, will make any difference, except, indeed, that sheep very scantily fed, such as those on the commons, have always a tendency to lose the fleece; and when it comes off so easy, the bushes, &c. and their own scratching (for they are generally scabbed or lousy), by degrees strip them of their clothing. Whenever a sheep is unhealthy, his wool becomes loose.

IV.—WAGGON FOR CONVEYING LIVE LAMBS TO MARKET.

The SILVER CERES MEDAL *was this Session presented to* PETER GREEN, *Esq. of Crookham, near Reading, for his* WAGGON FOR CONVEYING LIVE LAMBS TO MARKET. *The following Communication has been received from him on the subject.*

Crookham, near Reading,
April 3, 1827.

DEAR SIR;

I BEG to offer to the Society of Arts and Manufactures a drawing of a carriage made for conveying lambs alive to the Smithfield market, which I have found to answer very well. It will carry from forty-five to fifty very commodiously; it is divided into four equal parts, that in going up or down hill, the lambs may not be crowded upon each other; and the partition is moveable (as you will see by

the drawing), so that you may take out the lambs behind or before; and by shifting the partition backwards and forwards, they are prevented from rushing to and fro, and may be caught with great ease.

I am, Sir,

A. Aikin, Esq. &c. &c. &c.

Secretary, &c. &c. PETER GREEN.

In addition to Mr. Green's communication, it may be stated, that all animals, even those that are full grown, lose in weight by being driven to market from considerable distances, as is the case with nearly all the animals brought to Smithfield; that their flesh is very susceptible of putrefaction, and probably is less wholesome than that of animals which have not undergone the fatigue of a long journey. Young animals, such as calves and lambs, are still more injured by over-driving; their flesh loses much of that delicacy of flavour which is its chief recommendation, so that the London butchers will give from half a crown to three shillings a piece more for lambs conveyed in waggons than for those which are driven to market.

Reference to the Engraving.—Plate II.

Fig. 4. A side view of the waggon. It is made with two floors, one above the other; *s s* the upper, and *t t* the lower stage, capable of holding from forty-five to fifty lambs very commodiously.

Fig. 5. An end view: the front is like the back, each having two doors to take out the lambs.

Fig. 6. A front view of one of the moveable partitions; and,

Fig. 7. A side view of it. By fixing the partitions in the middle, the area is divided into four equal parts, so that the pressure or crowding of the lambs on each other is only one quarter of what it would be without the partitions; the same arrangement enables them to be taken out of the waggon commodiously, and with much less struggle.

V.—MACHINE FOR SLICING TURNIPS.

The Silver Ceres Medal *was this Session voted to Mr.* W. Thorold, *of Great Melton, near Wymondham, Norfolk, for his* Machine for Slicing Turnips, *a Model of which has been placed in the Society's Repository.*

Melton, near Wymondham,
January 9, 1827.

Sir;

I beg to offer to the notice of the Society of Arts a machine for Slicing Turnips, which I hope, upon examination, will be found worthy of their patronage.

Having this year thirty beasts at turnips, it became necessary to have a more expeditious method of slicing their food, than a simple knife, similar to a brush-maker's, which had hitherto been used: not choosing to go to the expense of an engine, I determined to try one upon a plan more simple and cheap than any which offered at the agricultural repositories. After some unsuccessful trials, a machine like the model herewith sent was the result. Its simplicity is so obvious, that a person unacquainted with the gradations between the first idea of an invention and its ultimate completion, would be unwilling to

allow that any intermediate arrangement could possibly have suggested itself; but I beg to assure the Society, that it was not until four were made that the invention could be considered complete. It is not pretended that this machine is the most expeditious yet contrived, but its claims to superiority lie in the uniform thickness and peculiar cleanliness with which the slices are delivered; and when it is understood that a turnip is severed at one blow, it will readily be conceded that sufficient expedition is attainable.

Machines that are intended to slice with the greatest expedition, are liable to cut the slices into wedge-like shapes, and to soil the sides of the slices, so as to render them an object of dislike to the cattle. They are also expensive and complex.

I am, Sir,

A. Aikin, Esq. &c. &c. &c.

Secretary, &c. &c. W. THOROLD.

Description, &c.

The model is constructed upon a scale of four inches to the foot, and in every respect is like the original, except the mallet, which in the model is of lead, but in the machine is of wood. The principal difficulty in its construction is to give the knives the proper radiation, in order that the slices may clear well; but if too wide below, they are apt to split the turnips, instead of cutting them.

The method of using it is, first to place a skep or basket directly under the knives to catch the slices as they fall through, then to put a turnip with its root downwards upon the knives, the mallet being lifted up as high as

convenient; then bring the mallet down suddenly upon the turnip; with the model, two or three blows are necessary, but with the large one, one blow usually suffices. It has been found that sudden impulse is requisite: mere pressure will not do.

Although this machine has not been made above a month, six gentlemen and farmers have adopted it; and one machine-maker applied to me for leave to make it, which, of course, I readily granted.

If I had not considered the practical application of this machine so palpable that every member may satisfy himself with his own hands, I should have inclosed certificates from those gentlemen who use them; but, if the Society consider those certificates indispensable, I will procure them.

A. Aikin, Esq. W. THOROLD.
Secretary, &c. &c.

As the effect of Mr. Thorold's machine could not be adequately judged of by the model, the Secretary was directed by the Committee to request Mr. Thorold to send a full-sized instrument, as well as certificates from those persons who had used it.

SIR; Melton, January 27, 1827.

I have sent the machine last made, which is the tenth; you will perceive it is somewhat different from the model, and I hope the alterations are for the better.

Owing to the difficulty of getting a country smith to make the knives of the proper temper, I have substituted some Sheffield knives, which my man obtained at Norwich, being part of the old stock of a machine-maker,

who used to make slicing engines. Six blades are found sufficient now that they are longer.

My man is just returned with Mr. A. Beevor's certificate, and says, Mr. Beevor has applied an iron chase to guide the lever, which doubtless is advantageous.

I hope the five certificates now sent will suffice.

I am, Sir,

A. Aikin, Esq. &c. &c. &c.

Secretary, &c. &c. W. THOROLD.

CERTIFICATES.

Great Melton, near Wymondham, Norfolk,
January 27, 1827.

This is to certify that I have used the turnip-slicer invented by Mr. Thorold, and am of opinion, that it is the most simple and useful machine as yet made for that purpose. (Signed)

EDWARD LOMBE.

Wymondham, January 29, 1827.

I have used one of the turnip-slicers invented by Mr. Thorold, of Melton, and consider it a more useful and simple machine than the one formerly used by me, and have adopted it in my concern.

THOMAS CANN, Jun.

Cavick House, Wymondham,
January 26, 1827.

SIR;

Your turnip-cutting machine I have great satisfaction in stating, is decidedly the best thing of the kind I have

ever seen. By it the work is most expeditiously performed, and in using it, it appears equally out of the power of the most ignorant person to injure the machine, or to slice the turnips in any manner which will present a probability of choking the cattle.

I am, Sir,

Mr. W. Thorold, &c. &c. &c.

Melton. W. R. CANN.

DEAR SIR; Wymondham, January 27, 1827.

I have used the turnip-slicer invented by you for some weeks, and I have great pleasure in certifying that it fully answers the purpose. So well satisfied am I with it, that I have directed my old machine to be disused.

Several experienced farmers in my neighbourhood have seen your machine, and highly approve of it.

I am, Sir,

&c. &c. &c.

Mr. W. Thorold. J. MITCHELL.

SIR; Honingham Thorpe, January 27, 1827.

I have very great pleasure in complying with your wish for having my opinion of your new turnip-slicer, and am highly gratified in the opportunity of affording you my testimony of its utility as an agricultural instrument. I was soon taught to put a just value on it, for the precision and celerity with which it performed its work, in preference to any thing I had ever used before. I have this year sixteen bullocks at turnips, ten tied up, and six in the yard; a stout girl cuts turnips for them, and attends them wholly, and has a good deal of time to spare, which was not the case before I got your slicer. I am fully

justified in saying, the same girl is perfectly equal, with the same instrument, to cut turnips for, and attend, at least, thirty bullocks, so very expeditiously is the cutting performed.

I am, Sir,
&c. &c. &c.

Mr. W. Thorold. ARTHUR BEEVOR.

In the first experiment tried before the Committee with Mr. Thorold's machine, the turnips made use of were the common white ones; and though it succeeded perfectly well in slicing these, it was suggested that, as the Swedish turnip is harder than the common white one, it would be expedient to make a trial with some of these also. A parcel of Swedish turnips, which had become rather tough by having been out of the ground for several days, was procured, and an experiment being tried on these, it was found that they were sliced very completely and accurately by the instrument, being in general driven through the knives by the first blow of the mallet.

Reference to the Engraving.—Plate X.

Fig. 9. A perspective view of the machine. It consists of a bench, *q r*, cut asunder, and the parts separated eight inches; this space is occupied, and the portions of the bench are united by the frame which contains the knives, the two outer ones, *s s*, being stouter and longer than the rest, in order that bolts may go through the lengthened ends and through the two parts of the bench, *q* and *r*, to hold them firmly together; *t*, a wooden block or mallet, grooved at top to fit on the lever *v v*,

which is secured in it by two staples, *u u;* the other end is T shaped, having pivots which turn in the two standards *w w;* the block *t* is so placed as to fall exactly on the knives, as shown by dotted lines.

Fig. 10 is an end view of the mallet *t*, showing the grooves in the under face over each knife; the knives below it are in section. The position of the knives is such, that they radiate from a point seven inches above them, and are a full inch apart; so that while the backs are left sufficiently strong, the space between them is a little wider than at the cutting edge; by this arrangement the slices of turnip fall easily through, without sticking, and as the face of the mallet projects between the knives, the turnips are thrust completely past the cut, and drop through into the basket.

Fig. 11 shows the perforated plate which holds the knives against the portion of the bench *q;* it has two pins *x x*, which fit in holes in the outside knives *s s*.

Fig. 12 shows the other perforated plate, which screws against the portion *r* of the bench; the ends of the knives are shown as coming through; they have holes through which the wire *y y* passes, in order to steady them; a similar wire goes through the other end of the knives, behind the plate *x x*.

Fig. 13 shows one of the interior knives, separate, with a hole at each end, for the wires *y y*.

Fig. 14 is a bird's-eye view of the knives, plates, and bolts, framed together; the portions *q* and *r* of the bench being indicated by dotted lines. The plate, fig. 12, has three holes, for the three bolts shown by dotted lines *z z z*, fig. 14, which secure it to the end *r* of the bench. The figs. 10, 11, and 12 are one tenth of the real size, and figs. 13 and 14 one thirteenth part, and fig. 9 one twentieth part.

VI.—PROTECTING TURNIP CROPS FROM THE FLY.

The GOLD CERES MEDAL *was this Session presented to Mr.* CHARLES POPPY, *Jun. of Witnesham, near Ipswich, for his method of* SECURING TURNIP CROPS FROM INJURY BY THE FLY.

IN December, 1825, a letter was received from Mr. Poppy in consequence of the premium offered by the Society to the inventor of an effectual method of protecting turnip crops from the fly. This letter occasioned a desire on the part of the committee to whom it was referred, for further particulars; and thus was begun a correspondence between Mr. Poppy and the Secretary, which continued for about a year and a half, and occasioned the interchange of numerous letters. It has not been thought necessary to print these at length, as it appeared that the object of the Society, the communication of useful information, would be better answered by disencumbering the useful facts of the repetitions and mutual explanations incident to a protracted correspondence.

The turnip fly is a small insect, which abounds, more or less, on the rank verdure of hedge-banks during the whole open time of the year, and spreads from thence on such agricultural crops as are grateful to it. Turnips are particularly exposed to its attacks while the young seedlings are yet very tender; but when they get into the rough leaf, they are, for the most part, secure from the attacks of this insect.

It is a general opinion, that the fly has been more prevalent, or at least more destructive, of late years, than it used to be, and this Mr. Poppy (admitting the fact)

attributes to the circumstance, that the turnips at present cultivated are finer in the tap root and in the herbage than they used to be, so that the seedlings continue longer in that state in which they form an agreeable food for the fly.

It is considered as a fact well ascertained, that when the turnip lands on a farm are sown in succession, with intervals of a few days between the sowing of each field, the crop suffers more than when the whole of the turnip lands are sown at once; the insects, in the former case, migrating from the field first sown to the next in succession, so that each field in turn is preyed upon by nearly the whole number of insects on the farm. On this account Mr. Sutton proposed that all the turnip lands of a district should be ploughed, rolled down, and then sowed on one and the same day, after the first shower of rain. This would, no doubt, be, to a certain degree, effectual, but is often impossible to carry into execution even upon a single farm, much more on an entire district.

It had been observed, that on those spots in a field where a greater quantity of seed than usual had been accidentally scattered, the plants, in consequence of being much crowded, drew each other up, like mustard sown for small sallading, and in consequence of this, were more tender and succulent than the rest of the crop. The patches were found to be particularly infested by the fly, which suggested to Mr. Paul, of Starston, in Norfolk, the idea of sowing a number of such patches, by way of decoy to the insects, and when collected in these places, they were to be destroyed by a heavy roller, or by scattering straw over them and burning them, or by any other means. The success attending this practice was very dubious, which induced Mr. J. Hayward, of Stoke-Ash, and Mr. Samuel Taylor, of Ditchingham, both of them friends of Mr. Poppy, to sow the whole land unusually

thick, in order that there might be plants enough to supply the insects, and also to stand for a crop. The success attending this practice was considerable, although it occasionally failed; but the plants, in consequence of the thick sowing, having been drawn up too weak, their subsequent growth was retarded, and the value of the crop deteriorated, it being well known that a large full grown turnip is of more value as cattle food than two or three smaller ones of the same weight.

Mr. Poppy, while he has adopted the practice of thick sowing, in order to decoy the fly, has avoided the injury to the crop arising from the plants being drawn up too weak, by drilling the seed in rows at only half the usual distance, and sowing thick the alternate rows for a decoy, while the other rows are sown thin, being intended to stand for a crop. The fly appears to prefer the white turnip to the Swedish turnip, so that a crop of this latter may be got with certainty, as far as security from the fly is concerned, by sowing thickly the rows intended for a decoy with white turnips. For this latter purpose, the seed obtained from untransplanted roots will answer perfectly well. When the turnips intended for the crop are ready for the first hoeing, the rows intended for a decoy, to which the flies chiefly confine themselves, are to be turned in with the horse-hoe.

In corroboration of his theory, Mr. Poppy, in 1826, drilled four acres with a pint of Swedish turnip seed, for the crop, and with about a peck of the commonest white turnip seed, for a decoy. The plan fully answered his expectation, the flies, which were very numerous, feeding almost entirely on the thick sown rows, so that he obtained an excellent crop, while those of his neighbours, sown at the same time, and in the usual manner, totally failed.

He was also requested by a friend to undertake the

management of four acres of ground which, under the common management, had always failed to produce a crop. Mr. Poppy complied with the request, although, as the farm was managed by a bailiff, it was not a very agreeable business. Not a drop of rain fell after the sowing, but, nevertheless, an excellent crop was obtained.

The following certificate from five of Mr. Poppy's neighbours attests the accuracy of the statement, and some further interesting particulars are contained in the subjoined letter from J. Cobbold, Jun., Esq., of Ipswich, in reply to one addressed to him by the Secretary.

CERTIFICATES.

We the undersigned saw Mr. Poppy's turnips repeatedly, from their infant state till drawn off the land; they were much infested with the fly, but stood the attack without injury, whilst all others in the parish at that *early period* were destroyed.

JOHN COOPER, WITNESHAM.
BENJAMIN COOPER, WITNESHAM.
RICHARD FLOWERDEW.
HENRY GILES, CHELMONDISTON.
THOMAS FLORY.

SIR, Ipswich, February 10, 1827.

In reply to your letter of the 2nd instant, I saw Mr. Poppy's field of Sweedish turnips last Summer, when nearly all the other turnips in this county were eaten by the fly, which insects were in great abundance on the surface of Mr. Poppy's field when I saw it, but they appeared to be principally drawn to feed upon alternate rows of common

turnips, which were black with the fly, and which were sown to decoy them from the Sweedish turnips, intended to stand for a crop (which were drilled in rows fifteen inches apart), and which by this mode I believe escaped destruction, as I have learned from him and his neighbours, that he had an excellent produce from his first sowing. Upon receipt of your favour, I rode over to examine the crop, but it was off the land, which was ploughed up.

I apprehended from their appearance, that the common turnips being sown *thick*, the plants were drawn up fast, and the leaf thereby became more tender and favourite food than those plants which stood thinner and more exposed to air; this appeared to me (independent of their liking common turnips best) a reason why the fly settled in such abundance on the *thick* rows of drilled common turnips.

From inquiries I have made of farmers in this neighbourhood, the plan is considered fully to answer the intended purpose, and I consider Mr. Poppy entitled to great credit, not only for the originality of the idea, but for his perseverance in adhering to it.

I am informed that sowing patches of common turnips very thick in various parts of a field sown with Sweedish ones, has proved an effectual mode of saving a crop this last Summer.

Any other information in my power I shall at all times be happy to render you.

I am, Sir,

A. Aikin, Esq. &c. &c. &c.

Secretary, &c. &c. JOHN COBBOLD, Jun.

CHEMISTRY.

COLOURLESS LAC VARNISH.

I.—*The Sum of* TWENTY POUNDS *was this Session given to Mr.* GEORGE FIELD, *of Syon-hill Park, for his* COLOURLESS LAC VARNISH; *a sample of which has been placed in the Society's Repository.*

II.—*The Sum of* TWENTY POUNDS *was this Session given to Mr.* HENRY LUNING, *of Apothecaries' Hall, for his* COLOURLESS LAC VARNISH; *a sample of which has been placed in the Society's Repository.*

THE varnish prepared by dissolving shell-lac in alcohol is, in hardness and brilliancy, superior to all others, except, perhaps, copal varnish, but can rarely be employed by the painter, on account of its dingy muddy yellowish brown colour. The Society have for some years endeavoured to draw the attention of artists to this subject, by offering a premium for lac varnish sufficiently colourless for the use of painters. The premium was claimed during the present Session by Mr. Field and by Mr. Luning; and on examination the processes of each of these gentlemen appearing to answer the intended purpose, the Society have thought fit to reward both of them.

Mr. Field's process is as follows:—

Six ounces of shell-lac, coarsely pounded, are to be dissolved by gentle heat in a pint of spirits of wine. To this is to be added a bleaching liquor, made by dissolving

purified carbonate of potash in water, and then impregnating it with chlorine gas, till the silica precipitates, and the solution becomes slightly coloured.

Of the above bleaching liquor add one or two ounces to the spiritous solution of lac, and stir the whole well together; effervescence takes place, and when this ceases, add more of the bleaching liquor, and thus proceed till the colour of the mixture has become pale. A second bleaching liquid is now to be added, made by diluting muriatic acid with thrice its bulk of water, and dropping into it pulverized red lead, till the last added portions do not become white. Of this acid bleaching liquor, small quantities at a time are to be added to the half-bleached lac solution, allowing the effervescence which takes place on each addition to cease before a fresh portion is poured in. This is to be continued till the lac, now white, separates from the liquor. The supernatant fluid is now to be poured away, and the lac is to be well washed in repeated waters, and finally wrung as dry as possible in a cloth.

The lac obtained in the foregoing process, is to be dissolved in a pint of alcohol, more or less, according to the required strength of the varnish; and, after standing for some time in a gentle heat, the clear liquor, which is the varnish, is to be poured off from the sediment.

"White lac varnish," says Mr. Field, "as above prepared, and used in a temperature of not less than 60°, dries in a few minutes, and is not afterwards liable to chill, or bloom; it is therefore applicable to drawings and prints which have been sized; and may be safely and advantageously used upon oil-paintings, which have been painted a sufficient time, as it bears out colour with the purest effect. This quality prevents its obscuring gilding, and renders it a valuable leather-varnish to the bookbinder, to whose use it has already been applied with

happy effect, as it does not yield to the warmth of the hand, and resists damps which subject bindings to mildew.

"As lac is the basis, even in name, of all the metallic lackers, colourless lac may afford silver and steel lackers, with little or no obscuration of their lustre. Its varnish polishes better than any other, and is applicable to some uses of the jeweller, to which purpose it has also been applied, as it has also successfully to the varnishing of light-coloured woods, and cabinet work, to which it is applicable in the manner of French polish; and there can be no doubt it would afford coloured lackers and varnishes of superior quality. In fine, the white lac varnish is generally applicable to the various purposes of other white hard spirit varnishes, and is to be used under the same conditions, and with the same management."

CERTIFICATES.

No. 3, Norris Street, Haymarket,
April 28, 1827.

SIR;

I am desirous of certifying to the Society of Arts, &c. that, having been in the continual habit of using lac and amber varnishes fifty years, I have tried and proved the superior excellence of Mr. Field's white lac varnish, which I consider a most valuable discovery for the Arts. I beg to assure the Society also, that I was authorized by an eminent artist and manufacturer, who had also used and approved it, to offer Mr. Field 100*l.* for the purchase of his process.

I am, Sir,
&c. &c. &c.
GEORGE VEALE.

A. Aikin, Esq.
Secretary, &c. &c.

own manufacture, because I cannot depend upon what is to be had at the shops; but I shall confidently use your's for every purpose when I want a spirit varnish.

I am, Sir,

&c. &c. &c.

Mr. Field. J. LINNELL.

In examination of Mr. Field's varnish by the Committee, it was found slightly to change the colour of test paper, indicating the presence of a little acid; on which it became a question whether the more tender of the colours used by painters were likely to be affected by it. This discussion produced the following letter from Mr. Field:—

SIR; Syon-hill Park, April 28, 1827.

I beg respectfully to suggest to the Committee, that if my white lac varnish contained chlorine, it would bleach test-paper, instead of which it only reddens it, in common with other spirit varnishes. Colours, which could be injured, however, by so weak an agency would be of no value; indeed, many pigments are heightened and improved by acids. I find also, that the brown lac varnish, mastic varnish, poppy oil, and even spirit of wine redden test-paper. Artists are in the constant use of vehicles even less neutral than these, such as vinegar, oils bleached by acids, and mucilage used in water-painting, which is seldom free from acidity; while acetate of lead, and the sulphate of zinc, are constantly employed as dryers, without apparent injury to colours, some of which are salts, as verdigris, &c. and few of them are perfectly neutral; add to which I do not find that bright iron, steel, &c. lackered with my varnish become in the slightest degree tarnished.

I have accompanied this with a specimen of my varnish which does not change test-paper, and I am confident it may be completely edulcorated in the preparation, so as not at all to affect it.

As a farther proof of its not having any property injurious to colours in its present state, I have varnished a coloured diagram, the colours of which are of my own preparing, for inspection of the Committee, without the previous usual defence of an intermediate sizeing; and as the ultra-marine therein (which, though otherwise the most durable of colours, is instantly destroyed by an acid) and also the madder colours (which, resisting entirely the action of light and oxygen, are yet readily destroyed by chlorine) are both unaffected by this varnish, as are also the other colours of the diagram, I think my long experience in such things justifies me in pronouncing it perfectly innocent with regard to colours.

I am, Sir,

A. Aikin, Esq. &c. &c. &c.

Secretary, &c. &c. GEORGE FIELD.

Mr. Luning's process is as follows:—

Dissolve five ounces of shell lac in a quart of rectified spirit of wine; boil for a few minutes with ten ounces of well burnt and recently-heated animal charcoal, when a small quantity of the solution should be drawn off, and filtered; if not colourless, a little more charcoal must be added. When all colour is removed, press the liquor through silk, as linen absorbs more varnish, and afterwards filter it through fine blotting-paper.

In cases where the wax contained in gum lac would be objectionable, filter cold; if the wax be not injurious, filter while hot.

On comparing Mr. Luning's varnish with Mr. Field's, in the state in which each was sent to the Society, the

former was of a much thinner consistence, and was rendered turbid, by scales of wax and a few particles of charcoal floating in it. On passing it through common white filtering-paper, the impurities were separated, and the liquid came through in a more completely colourless state than Mr. Field's. This seeming advantage was, however, owing to the much greater state of dilution of Mr. Luning's varnish; for, when brought by evaporation to the consistence of Mr. Field's, they each appeared as nearly as possible of the same very pale yellowish tint; so that for the use of the painter and varnisher, they may each be called equally colourless.

Mr. C. Varley having made some interesting comparative experiments on the two varnishes, his letter to the Secretary detailing the same is here added.

52, Upper Thornhaugh Street,
March 31, 1827.

Sir;

I have varnished some of my sketches with Mr. Field's lac varnish, and some with Mr. Luning's ditto.

Mr. Field's varnish appears to me to answer all that can be expected from a varnish. It may be laid on as freely as any other varnish, and dries quick, brilliant, and transparent. It is superior to all other varnishes in its approach to a glassy surface, and in freedom from tackiness. It is about a right strength or body, though I prefer a sample I had before from Mr. Field, which is as thick as can be laid on; for it is desirable for a varnish to be as thick as will allow time for it to be spread on, because it then thickens so soon, that its solvent has no time to act on the oil or colours of the picture.

Mr. Luning's varnish is a great deal too thin, and therefore requires two or three coats before it will bear out; and then, owing to its thinness, the activity of the spirit softens the first coat of varnish, and renders it uneven.

It is not so brilliant as Mr. Field's, owing to the mixture (not solution) of wax, and is rather dirty, from the wax retaining some of the charcoal. Therefore I most decidedly give the preference to Mr. Field's varnish.

I have succeeded in throwing down both the wax and charcoal by adding spirit (essential oil) of turpentine, which dissolves the wax, and the solution then becomes sufficiently heavy to separate from the varnish; it requires at least one of spirit of turpentine to three of the varnish before the former is heavy enough to separate, and then it is scarcely a liquid, and separates very slowly; but if more spirit of turpentine is added, it goes down quicker. The varnish dissolves a small portion of the spirit of turpentine, which I feared might be an evil, when drying; but I cannot perceive that it makes any difference. Mr. Luning's varnish, when so freed, appears more colourless than Mr. Field's; but, if brought to the same strength, there would be very little difference; but probably a union of the two processes may produce the varnish like water, though the colour of each is at present equal or superior to most of the varnishes now in use, and will therefore stand at the head as the chief varnish.

I am, Sir,

A. Aikin, Esq. &c. &c. &c.

Secretary, &c. &c. CORNELIUS VARLEY.

In the Philosophical Transactions, Vol. LXXXIV. is a chemical examination of lac by Mr. Hatchett, from which it appears, that one hundred parts of shell lac consist of 90·9 resin, 4 wax, 2·8 gluten, and 0·5 extract. Cold alcohol will take up eighty-one parts of the resin, and leave the wax and gluten untouched; it would, therefore, probably, be an improvement on either of the above processes, to make the first solution of the shell lac in cold instead of in warm or boiling alcohol.

III.—SODA LEY FOR DYERS.

The Sum of FIVE GUINEAS *was this Session given to Mr.* C. CAMERON, *of Glasgow, for his mode of* PREPARING SODA LEY *for the use of* DYERS OF TURKEY RED. *The following Communication was received from him on the subject.*

No. 18, Saltmarket Street, Glasgow,
April 7, 1827.

SIR;

I BEG leave to request of you to lay before the Committee the following communication: I hope it is not yet too late. You, Sir, as a man of science, will immediately appreciate its merit.

I am, Sir,

A. Aikin, Esq. &c. &c. &c.

Secretary, &c. &c. CHARLES CAMERON, *Chemist.*

Method of making a cheap Soda Liquor, without Crystallizing, for the use of the Turkey-red Dyers.

As the Turkey-red dyers are the great consumers of the common soda of commerce, it occurred to me, about four months ago, that they might make their own alkali, by the cheap and simple process of decomposing muriate of soda by pearl-ash, and thus procure a liquor equally pure, without the tedious and expensive operation of bringing the soda to the state of crystal. I pointed out the following plan to a Turkey-red dyer here, who immediately put it in practice, and it is now gradually adopting by the trade.

Into a cast-iron boiler capable of holding 450 gallons of water, I put ten hundred weight of pearl-ash (first sort), seven hundred weight muriate of soda, and four

times the weight of the muriate of soda of water, applying heat, and stirring until both are dissolved. After boiling for some time, the muriate of potash begins to crystallize on the surface. As the boiling is still continued, the muriate of potash is rapidly forming, and is lifted out of the vessel by means of a ladle pierced with small holes, and is thrown into a vessel placed in an inclined position, with its end or side a little within the edge of the boiler, which allows any of the liquor that may have been carried over, to drain back again into the pot. The boiling is continued until nearly the whole of the muriate of potash is deposited and taken out. The liquid is then removed into another vessel, either of cast iron or wood lined with lead, and allowed to remain until it has cooled to the temperature of sixty degrees, during which time it parts with the rest of its muriate; it is then run off into another vessel, and diluted with water to twenty degrees specific gravity, more or less at pleasure, which prevents the soda from crystallizing, and gives an uniform strength of liquor, equally pure with the best crystallized soda, and at about half the price. The above weight of pearl-ash and muriate of soda, produces a mineral alkali equivalent in quantity to what is contained in one ton of soda of commerce, the best of which does not exceed 22 per cent.

Present price of soda, 22*l.* per ton.

	£.	s.	d.
Price of pearl-ash, first sort, per ton	28	0	0
14 cwt. of muriate of soda, 30*s.* per ton	1	2	0
	29	2	0
These produce 1¼ tons of muriate of potash, price 5*l.* 10*s.* . . .	6	17	6
Cost of alkali, equivalent to 2 tons of soda	22	4	6

The process is so simple, that one workman can decompose one or more tons per day, dependent on the size of his vessels. As the Turkey-red work consumes from forty to two hundred and fifty tons annually, according to the extent of its establishment, it is of great importance to that valuable manufacture. I can claim no merit in merely decomposing muriate of soda by potash, that is a fact long known; what properly belongs to me is, being the first to point out to the trade a simple and unexpensive method of making their own alkali, without being at the expense of erecting additional premises, and extensive apparatus, required for the purpose of crystallizing; a common boiler and two or three other vessels being all that is requisite.

CHARLES CAMERON.

IV.—MEDICINAL EXTRACTS.

The THANKS *of the Society were voted to* J. HOULTON, *Esq. Grove Place, Lisson Grove, for his method of preparing* VEGETABLE EXTRACTS *for* MEDICINAL USE.

11, Grove Place, Lisson Grove,
March 25, 1826.

SIR;

I BEG to solicit the attention of the Society of Arts to specimens of Extracts of Medicinal Plants, which have been prepared without the aid of artificial heat, and in a more easy and economical method than that ordinarily employed, and which, at the same time, produces an article in no respect inferior to the extracts made in the usual way, but in many points very superior; and it

ensures the preservation of the smell, flavour, and full medicinal power of the plant from which it is prepared; and, with care, the colour may be preserved in a very superior manner.

The process is not so liable to failure as the common way; in fact, failure to make a superior article is almost impossible.

No. 1. A dry extract of taraxacum.

No. 2. Extract of conium.

No. 3. Extract of conium in a dry state, to show the resinous fracture.

No. 4. Specimen of vegetable extract *(conium)*, in which attention has been paid to colour.

Should the Society deem the manufacture worthy their notice, I shall be happy to lay before them a fuller account of the process I adopt.

I am, Sir,

A. Aikin, Esq. &c. &c. &c.

Secretary, &c. &c. JOSEPH HOULTON, F.L.S.

Member of the Royal College of Surgeons.

It is well known to professional men, that the juices of almost all plants are more or less injured in their medicinal qualities, by being boiled down and evaporated in the usual way, to the consistence of extract.

At Apothecaries' Hall the evaporation is entirely effected by means of steam, so that the heat employed is under complete control; and in Mr. Barry's patent process, the evaporation is performed in vacuo.

Mr. Houlton's process is the following: the plant being bruised, is to be submitted to the action of a press, in order to squeeze out the juice, which is then to be strained through fine linen. The depurated juice is now

to be poured to the depth of about one-eighth of an inch into an earthenware plate, or a glass dish, and is to be exposed to a constant current of air, by placing it on the inner sill of a window, and raising the sash about an inch. The constant current of air thus produced, occasions the rapid evaporation of the watery parts, and there remains a soft extract, retaining the colour, odour, and medical properties of the recent plant, with less alteration than by any other method. If the sun shines, a blind should be hung before the window, as vegetable juices are speedily changed by the action of solar light. The consistence given to the extract is entirely optional, but those that are rather hard will keep better than those that are soft.

The method is not adapted to a manufactory on a large scale; but any individual practitioner may, without much trouble or expense, prepare in this way, for his own use, extracts far superior, in active properties, to those that are usually met with.

V.—PREPARING LIME-JUICE.

The THANKS *of the Society were presented to* CAPTAIN BAGNOLD, *for the following Letter, and the samples of* LIME-JUICE *by which it was accompanied.*

SIR; Falmouth, July 12, 1825.

FROM some conversation I had with one or two of the members of the Transport Board, I find they are by no means satisfied with their knowledge of the effect produced on the antiscorbutic qualities of lime-juice, by the 25 per cent of rum, now added for its preservation. This

induces me to hope, that the mode I have adopted to cure it for sea voyages may be of more consequence than I at first suspected. Last Christmas I caused some to be prepared in Jamaica, and one dozen has been sent home, samples of which will accompany this letter. I have simplified the process, and I trust where the directions are carefully followed, the juice will be permanently preserved in an unaltered state. The bottle which accompanies this, is one of a dozen, prepared by a process far less troublesome, and equally efficacious, with that of Mr. Appert, for the application of which I had the honour of the Society's thanks last year; and by the alteration proposed, a great deal of the loss hitherto occasioned by the bursting of bottles in the boiler will be prevented. Should the Society be of opinion that I have made an improvement in the process, they will deal with it according to its merits.

The expressed juice being well strained, to separate every particle of pulp and rind, is to be boiled in an earthen vessel smartly for half an hour; a part of the water is driven off, and the vegetable albumen will separate, and subside on cooling; decant the juice clean, and re-boil it for a few minutes; fill it into bottles previously dried and heated, so as to leave just room enough for the cork; cork tight, cement over the cork, and lay the bottles away on their sides. By this process the whole dozen were prepared, and if not opened till Christmas, will have been twelve months under cork. I shall direct another bottle to be sent, for the purpose of being deposited in the model room, to try the effect of time upon; have the goodness to cause its date to be noted. In fine, this process, instead of boiling the bottles with their corks tied in, and breaking many, perhaps twenty per cent, by the heat, is simply to put the boiling fluid into the bottle,

instead of the bottle into the boiling fluid. It appears to be equally efficacious in preserving the juice without the alcohol, and leaves it in possession of all its flavour.

I am, Sir,

A. Aikin, Esq. &c. &c. &c.

Secretary, &c. &c. WM. BAGNOLD.

The sample was bottled in Jamaica, at Christmas, 1824, and at the time of being examined, had been two years in bottle. Its acidity did not seem to be impaired, but the flavour had a slight smack of empyreuma. Notwithstanding this, it would probably be more grateful to invalids on board ship, and certainly would be more efficacious, than the juice preserved by means of rum.

MECHANICS.

I.—COMMUNICATING WITH A STRANDED VESSEL.

The SILVER VULCAN MEDAL *was this Session given to Mr.* W. THOROLD, *of Melton, near Wymondham, Norfolk, for his* IMPROVED REEL FOR CAPTAIN MANBY'S APPARATUS. *A model of the same has been placed in the Society's Repository.*

THE considerable loss every year of valuable lives by shipwreck on the British shores had early attracted the notice of the Society, and premiums were offered for the discovery of effectual means of diminishing the frequency of these distressing calamities.

In the year 1791, the sum of fifty guineas * was given to Mr. J. Bell, sergeant of the royal regiment of Artillery, for his invention, which consisted of an eight-inch shell loaded with lead, and having a light rope attached to it. The shell being discharged from a small mortar, on the deck of a stranded ship, would perform a range of about two hundred yards, carrying the rope with it, and would bury itself in the sand of the shore, so as to form a communication with the land, by means of which boats or rafts might be hauled through the surf, and thus greatly facilitate the probability of escape from the wreck.

* See Vol. X. of the Society's Transactions.

The objections to this plan consisted in the difficulty of prevailing on the owners of merchant ships to incur the expense, and on the masters to have the apparatus in constant readiness for use. Besides which, many cases would no doubt occur in which, from the pitching of the vessel, and from the sea beating over her, it would be impossible to project the shot in the right direction, or even to discharge the mortar at all.

It was therefore with much satisfaction that the Society, in 1808, conferred their large gold medal on Captain G. W. Manby, of Yarmouth, for very considerable improvements on the original proposal of Mr. Bell. These consisted in stationing the apparatus ashore instead of having it on board the ship, as indeed had previously been proposed by Mr. Bell,* thus enabling, in the first place, a single apparatus to be used in aid of every vessel that might be driven ashore on a considerable line of coast; secondly, enabling the persons intrusted with the apparatus to become familiar with it, and therefore prompt in its application; thirdly, increasing the probability of success, by having the power of placing the mortar in the most favourable position, with regard to the vessel, and of arranging the rope so as to render it much less liable to entangle, and thereby to break, than if it were thrown from the deck of the stranded vessel.

The great personal activity and exertions of Captain Manby in this very interesting and meritorious undertaking were liberally seconded by the government; and the result has been, that on the eastern part of the Norfolk coast, where Captain Manby has been stationed, 332 persons have been rescued from stranded vessels from the year 1808 to 1826, according to the subjoined list.

---

* See Vol. XXV. of the Society's Transactions.

Place where saved.	Date.	Names and Description of the Vessels, distinguishing those of Foreign Nations.	No. of Persons saved.	To or by whom the Case has been reported.
Yarmouth ...	12 Feb. 1808	Brig Elizabeth	5	To Committee of House of Commons, 9th May, 1823
Hasbro	5 Jan. 1809	Br. Wanderingmain, *Swed.*	13	Ditto
Yarmouth ...	15 Dec. 1809	Brig Nancy	6	Ditto
Yarmouth ...	15 Dec. 1809	Brig Camilla	7	Ditto
Pakefield	13 Jan. 1810	Hoy Henrietta .... *Dutch*	7	Ditto
Hasbro	13 Jan. 1810	Galliot ..... *Dutch*	6	Ditto
Winterton ...	24 Jan. 1810	Vrow Maria ..... *Dutch*	2	Ditto
Yarmouth....	2 Oct. 1810	Brig Susan	8	Ditto
Yarmouth....	10 Oct. 1810	Brig, collier laden	6	Ditto
Mundsley....	2 Nov. 1810	Brig Four Friends	7	Ditto
Yarmouth ...	4 Nov. 1810	Brig Elliot	7	Ditto
Yarmouth ...	4 Nov. 1810	Brig, coal laden	6	Ditto
Lowestoft	10 Nov. 1810	Brig, coal laden	8	Ditto
Yarmouth ...	5 Jan. 1811	Brig, coal laden	7	Ditto
Yarmouth ...	6 Jan. 1811	Galliot ..... *Danish*	9	Ditto
Mundsley....	13 Oct. 1811	Brig Sophia	12	Ditto
Hasbro	20 Jan. 1812	Brig Commerce	10	Ditto
Mundsley....	6 Jan. 1814	Brig Jongo..... *Dutch*	7	Ditto
Yarmouth ...	20 Jan. 1814	Ship Venus	9	Ditto
Hasbro	20 Jan. 1814	Galliot Verendering, *Dutch*	10	Ditto
Mundsley....	28 Jan. 1814	Vrow Gessina..... *Dutch*	6	Ditto
Trimmingham	28 Jan. 1814	Brig Ploug ..... *Danish*	12	Ditto
Bacton	8 Sept. 1814	Brig Hopewell	7	Ditto
Winterton ...	15 Apr. 1815	Brig Providence	7	Ditto
Winterton ...	29 Oct. 1815	Brig John	9	Ditto
Yarmouth ...	7 Nov. 1815	Brig Leipsic	10	Ditto
Mundsley....	1 Sept. 1816	Brig Ranger	9	Ditto
Mundsley....	12 Jan. 1818	Brig Dairy Maid	5	Ditto
Mundsley....	26 Oct. 1819	Brig Betsy	11	Ditto
Yarmouth ...	4 Nov. 1821	Galliot Matilda.....	5	Ditto
Yarmouth ...	4 Nov. 1821	Sloop Sprightly	4	Ditto
Winterton ...	13 Oct. 1822	Sloop Dolphin	1	By Preventive Coast Guard
Winterton ...	14 Oct. 1822	Brig Supply	5	Ditto
Winterton ...	4 Mar. 1823	Brig John	10	Ditto
Winterton ...	23 Mar. 1823	Brig, *laden*	10	To Committee of House of Commons, 9th May, 1823
Winterton ...	31 Oct. 1823	Sloop William and Francis	2	By Preventive Coast Guard
Winterton ...	31 Oct. 1823	Brig Edmond	6	Ditto
Mundsley....	4 Nov. 1823	Sloop Field	4	Ditto
Yarmouth ...	23 Nov. 1823	Brig Jessies	11	Ditto
Corton	1 Dec. 1823	Brig Venus	10	By Custom-Ho. Grt. Yarm.
Hasbro	2 Mar. 1824	Sloop Alexander the Great	3	By Preventive Coast Guard
Hasbro	3 Mar. 1824	Sloop Albion.....	2	Ditto
Filey Bay....	12 Oct. 1824	Brig George and Elizabeth	5	Ditto
Caister	23 Nov. 1825	Ketch ..... *Swedish*	7	Ditto
Yarmouth ...	20 Dec. 1825	Brig Lapwing	5	By Norfolk Association
Yarmouth ...	26 Dec. 1825	Sloop Herring	4	Ditto
Caister	19 Feb. 1826	Sloop Faith	5	Ditto
Bacton	5 Nov. 1826	Sloop John	5	By Preventive Coast Guard
			332	

Captain Manby's original method of coiling or faking the rope on the shore was an operation that required to be very dexterously performed; was impracticable in some places, from the inequalities of the ground; was liable to derangement from the wind; occupied much precious time after the arrival of the apparatus, and scarcely admitted of being performed by night. A great improvement was subsequently made by Captain Manby, in having the ropes arranged in baskets, which allows of their being now conveyed, in a state ready for immediate use, to any place where they may be wanted. Under the management of Captain Manby and his immediate assistants, the breaking of a rope in consequence of its getting foul while running out, is a very rare occurrence. Other persons less accustomed to the business, and, perhaps, less dexterous, have, however, frequently failed, and it seems to be generally allowed by the associations on the coast of Norfolk and Suffolk, for relief in cases of shipwreck, that some more certain mode of faking or coiling the rope, would be an important improvement.

In 1823, Mr. Hase, of Saxethorp, in Norfolk, being employed to cast a brass mortar for one of Captain Manby's apparatuses stationed near Cromer, constructed a skeleton reel, or rather conical spindle, as an improvement on Captain Manby's baskets. This reel was supported by an axis, which allowed of its being placed at any required angle, and the rope being wound round it, was expected to be delivered more freely and with less risk of breaking, than by the usual mode. Experiments made at Cromer confirmed the anticipation of the inventor, and the apparatus has now been in use for three years, and apparently has given much satisfaction.

Finally, Mr. Thorold has given to Mr. Hase's reel a stronger and more compact form, has both expedited and facilitated the coiling of the rope evenly upon it, and has

placed the mortar and reel upon wheels, so that it may be transported expeditiously to any place where it is wanted. The Society, however, are sensible, that by so doing, the expense of the whole apparatus is considerably increased; that it is now scarcely capable of being conveyed by hand, as Captain Manby's and even Mr. Hase's is; and that therefore situations may occur, to which it would be difficult, if not impossible, to bring it.

Observations and Description of an Improved Apparatus for saving Lives of Shipwrecked Mariners. By W. Thorold.

Persons who make improvements in machinery are under the disagreeable necessity of exposing the previous defects, not from invidious motives, but to show wherein their improvement consists. It is therefore hoped the following observations will be ascribed to that cause, and not to any idea of detracting from the credit the inventors have so justly obtained, or to lessen them in the eyes of the Society.

At the annual exhibition of apparatus for saving lives from shipwreck, held at Cromer, on the 1st of September, 1823, the writer attended for the express purpose of improving it, if possible. The method of laying or preparing the line, appeared to him but ill-adapted for the urgency of the case, and particularly after once spent. Captain Manby has greatly improved the method described in the Transactions, by faking the line on pegs, and afterwards delivering it into baskets, ready for projection. With the Captain himself this method has seldom failed, but with others the case has been far otherwise, and generally the first three or four shots have been spent in fruitless

attempts; then recourse must be had to the old method of faking it on the beach, when the risk of failure is doubly increased, in its liability to catch the stones, or to be swept away by the sea. In order to avoid the sweep of the sea, the fakes are frequently laid higher up the beach, but in remedying one evil another is incurred, viz. the distance from the wreck is increased, a great evil in desperate cases. To show the importance of this part of the service, I shall quote Captain Manby's own words, from the 26th volume of your Transactions, page 227. "Knowing the success of the service depends upon the regularity in laying the rope, I have given a plan of the best mode repeated practice has furnished. The fakes should not exceed five or six yards, for if extended to a much greater length, the vibration at each extent (like the pendulum of a clock) becomes so considerable, that a deep-sea-line is unable to resist its force, and consequently the object of the service defeated, with the loss of the shot, and part of the line." Here is a tacit admission that faking is objectionable, although it is improved by shortening the fakes until the resistance is less than the momentum of the shot. But this success by no means proves it to be the form which offers the least possible resistance to the air and the shot; on the contrary, it proves it to be the greatest strain a line will bear without breaking, for if the fakes are lengthened a little, the shot breaks away, and by analogy we may infer, that fakes, however short, offer more resistance than the circular form, in the manner used in the whale fishery. Of this latter Captain Manby says, "Could persons in the performance of this service be always collected, the latter method would have the decided advantage over the first, being laid in much less time." See his "Essay" and "Supplement to Encyclopædia Britannica, art. Preservers," page 364. This is precisely the coil formed by the im-

proved reel, entirely by mechanical means, and uninfluenced by mental agitation.

The next method tried on the above occasion was from a reel invented by a very ingenious mechanic in Norfolk, from whom (as I am at all times ready to acknowledge) I received the first idea of my invention. The reel of Mr. Hase was a cone, formed of two circular ends, connected by eight splines, turning upon a vertical spindle fixed in cross trees, but not connected with any cart or carriage, and elevated by a temporary contrivance. This reel consumed as much time in recoiling as the pegs and basket, and was equally liable to be deranged by the sweep of the sea; and the only advantage it possesses over the basket is its capability of being coiled in the dark.

The model herewith sent is made to a scale of three inches to the foot, which, with the sheet of drawings, it is hoped will be sufficiently explanatory. Previous to setting out, the apparatus must be put into complete travelling order, one line being coiled on the reel, and another (wound on a frame) being placed in one of the boxes; a spare shot and other necessary articles will occupy the other box. On coming to the spot opposite the wreck, the mortar is to be unshipped, and placed a few yards to leeward of the reel, and elevated about thirty degrees; the reel must be elevated in like manner when standing level with the mortar; but if above, on a cliff, the reel must be depressed lower than the mortar, according to the height above it. Previous to firing, the ring with the crank attached to it is to be removed from the head of the reel, the guide is to be thrown back, and the line is to be fastened to the shot. Some person must now place his finger on the first coil, to prevent it from being blown off, and he is to retreat, just before the discharge of the mortar. After firing, if the shot has missed the wreck, and it becomes necessary to fire again, the reel

must be brought to point blank, the crank ring must be replaced, and the guide turned, with its box at the lesser end; the rope frame is to be taken from its box, and placed in a proper position; the rope is to be rove first through the nippers, then through the guide-box, and finally is to be hooked to the foot of the crank: the man may now begin to turn, when the crank ring will form the first coil; this acts upon the guide, while the second is forming, and so on till the whole rope is wound on the cone: the end is then fastened, and the cone likewise, to keep it from turning; it is now ready for projection as before. It may now become necessary to coil the first rope; to do this, nothing more is required than to bring the reel a quarter round, so as to have its broadside to seaward, then place a man with the nippers between the sea and the reel, and the line may be brought in as quick from the sea as from the frame, the nippers clearing it as it passes through them. The method of winding the rope on the frame requires attention, in order that it may pay out sufficiently fast for the reel, which requires six hundred feet per minute, when working at an average speed. The method of doing this is shown by inspecting the frame; the object is, to wind it so that it may come off without catching, or being detained by another coil; this is effected by crossing back after the frame is once filled, and beginning a fresh course directly over the first.

The greatest attention must be paid to this simple operation, but it is to be performed in calm weather at any convenient opportunity. The guide-box in the model differs from the large ones, they having a friction roller, as shown in the drawings. There is also a lamp suspended upon a Hooke's joint, fixed to the spindle. The Mundesley men use a sort of wooden glove, sometimes, instead of the guide, but they cannot coil so expeditiously. Tarred ropes can be used with the reel exclusively, which

creates a great saving, as they last three times as long as white ropes: another advantage arises in the extreme pliancy of the line fresh wound on the reel, compared to that on the pegs, which must inevitably get stiff at the turns, from the length of time it remains on them.

CERTIFICATES.

These are to certify that Mr. Thorold's reel was tried on the Beach at Mundesley, in the presence of many gentlemen, and that in every respect it was found superior to any thing of the kind which has hitherto been produced. That Mr. Fowell Buxton found by his watch, Mr. Thorold was enabled to wind the line, and prepare the shot for discharge, in one minute and a half.

J. M. JOHNSON, *Lieut. R. N.*

Colney, Norwich, February 10, 1826.

I was present at Mundesley, in August, 1824, when a rope coiled round the reel invented by Mr. William Thorold, was, by means of a shot attached to it, thrice thrown over a vessel at anchor off the Beach, and have no doubt of its very great utility. Had the comparative experiment which was afterwards made been continued, so as to have afforded an opportunity of forming an opinion, I am much disposed to believe, that the superiority of the reel, except in some particular situations, would have been manifest.

JEH. POSTLE.

Mundesley, January 20, 1826.

This is to certify, that I have witnessed comparative trials with the most improved apparatus for saving lives

from Shipwreck, and am of opinion, the reel invented by William Thorold, of Great Melton, in Norfolk, is superior to any yet produced.

FRANCIS WHEATLEY,
Deputy Vice-admiral of Norfolk.

SIR; Melton Hall, February 27, 1826.

I am most happy in being enabled to certify, that I have witnessed experiments with the reel invented by you, and heard evidence before the Central Committee, at Norwich, of which I am a member, and am of opinion, with the rest of the Committee, that its superiority was manifest over any other invention yet offered.

I am Sir,
&c. &c. &c.

Mr. W. Thorold. EDWARD LOMBE.

Reference to the Figures, Plate 1.

Fig. 1 is the side elevation of the cart and reel in its travelling position, with the mortar in front, and stowage for all the requisite apparatus; one line is kept ready coiled on the reel: the near wheel is taken off, and the cone represented in section, to show how it is mounted on an axis. This axis is fixed in the centre of a strong wooden cross, *a a*, which is secured or framed by four bolts to the bars *b b*; these are hinged at *c* to the cart: *d* is a bar of iron, with holes, serving as an elevator; it is screwed to the frame *b*, and one of the holes being placed on a pin fixed in the cart's side, retains the cone or reel at the required angle. Two chains *e e* are fixed, one at each side of the cart, and to the frame *b b*, which retains it, when vertical,

as shown in fig. 2, the elevator *d* then catching the pin by its last hole: *f*, a moveable ring and winch-handle (shown removed in fig. 3): *g* a guide-bar, turning on pivots in the frame *b b*, on which is a sliding box, *h*, to be used in coiling the rope.

Fig. 2, a perspective view of the cart and reel in the position necessary for coiling on the line (part of the near wheel being broken away to show the cart). The mortar is removed from the cart; the cone is then brought to the horizontal position, and retained there by the chains *e e* and the bar *d*. Within the winch ring *f* is a hook *i*; a bend of the line being placed on this, the reel is to be turned once round, by means of the winch, and the rope is then passed through the eye of the guide-box *h*, and the nippers *j* (the sliding guide-box *h* is shown on a larger scale in fig. 4, and with the addition of a friction roller, *k*). The rope, as it passes through the guide-box, rests on a pin, and is kept in by a tumbler *l*. The front plate *m*, on which the pin is fixed, barely touches the reel, it being relieved by the roller *k*. The last coil of line keeps pressing against this plate *m*, and gradually slides it up the bar *h* as the coils advance, thus preventing them from riding or overlapping, however rapidly the winding may be performed; at the same time the nippers *j* deliver the line to the reel quite clear of knots or kinks.

Figs. 5 and 6 show a top and end view of the nippers open.

Fig. 7 represents the reel elevated to the firing position, and retained so by the bar *d*; the guide *g h* is thrown back, and the winch-ring removed. When this pressure is taken off, the elasticity of the cord causes it to rise a little, and throw off two or three of the upper coils; the next coil is kept in its place by one of the assistants laying his finger on it, and not withdrawing it till the moment of firing. The mortar is to be placed a few yards

to leeward of the reel, with the line attached to the shot. A clamp *n* hangs from the frame *b*, by means of which the last coil of the rope is to be bound to the rim of the cone, in order to secure it for travelling, the remainder of the line being on the frame *o o*. Another line on a similar frame *o o*, fig. 2, is stowed in the tail of the cart, and *p*, on the top of the cart, is a locker in front of the axle-tree for the shot.

Fig. 8 represents one of these shots, which has a cylindrical body, and is made conical behind.

The carts and reels are drawn forty times less than the original.

II.—INSTRUMENT TO ENABLE THE BLIND TO WRITE MUSIC.

The LARGE SILVER MEDAL *was this Session given to* DON JAIME ISERN, *for his* INSTRUMENT TO ENABLE THE BLIND TO WRITE MUSIC, *which has been placed in the Society's Repository.*

DON JAIME ISERN, the inventor of this machine, is a gentleman of Catalonia, who has been blind from his birth. He is now about twenty-five years old, and is an excellent performer both on the piano-forte and violin. Some time ago he was induced to make a journey to Montpellier, for the purpose of being couched, and though the operation was entirely without success, yet the journey had this advantage, that it afforded him the opportunity of learning to write both common letters and musical notes. On his return, he invented the machine in question, and has used it with much satisfaction ever since.

The object of the invention is, to enable a blind composer to transfer his thoughts to paper in the usual musical notation, without the necessity of employing an amanuensis. It has this disadvantage, that the inventor cannot afterwards read what he has written, but this, in the particular case of Don J. Isern, is of small moment, for being endowed with a tenacious and well-exercised memory, he never begins to write any musical composition till he has passed and repassed through his own mind the whole series of notes, and has thus corrected it to his own satisfaction. He then transfers it to paper in the manner to be described, and at the same time finds, that by the effort he has impressed it indelibly on his memory.

It is obvious that the power which through this instrument he acquires, of writing music on paper in the common notation, frees him from the necessity of employing another person to re-write and translate (so to speak) his thoughts, as would be the case if he had made use of any of the instruments hitherto invented for enabling the blind to write music. He has therefore rendered himself much more independent in this particular than he was before; and those who take thought on the long tedious hours of solitude and involuntary idleness which result from the extinction of the noblest of the senses, will not lightly appreciate an invention which redeems from blank oblivion some of these hours, and converts them into enjoyment and a blessing.

The instrument is a table or board (plate iii, fig. 1) about eighteen inches long, and nine inches wide, on the bottom of which a sheet of white paper is secured by means of a straining frame. Over this is laid another sheet of paper covered on the under side with a composition of oil and lamp-black, so that any lines or characters drawn with a hard point on the upper paper will be represented by corresponding black lines on the white

paper. One of the longitudinal edges, *f f*, of the frame, is about half an inch high, and has a simple groove made along its inner side, *i*, fig. 3; the opposite edge is twice as high, in order to allow room for a groove corresponding with that in the other end, and also for a line of teeth, or a rack *t* placed above the groove. At one end of the frame is a slider, *k*, having a spring click, which takes into the teeth of the rack, and which, therefore, may be moved forward by equal intervals for every note, division of the measure, &c. On the inner margin of the slide is a chamfered brass plate *q*, figs. 1 and 2, about an inch wide, having ten music lines, composed of five each, raised on its surface, with notches between for the ledger lines. At the other end of the frame is inserted a slide, *j*, figs. 4 and 5, carrying a ruler in which are ten sets of five wires each. If this slide is pushed on till it comes in contact with the slide *k* already described, it will be found that the wires in the former coincide with the raised lines on the latter; and if the ruler be then drawn back to its former position, pressing down the wires at the same time, by bearing on the handle *p p*, the white paper below will be ruled fit to receive the musical notes, &c. The ruler-slide is then to be withdrawn, and is to be replaced by a plain one *l*, on the inner edge of which are scores or notches indicating the position of the ruled lines. This slide is to be brought almost in contact with the slide *k*, and the first note is to be made on its proper line, by pressing with a blunt style, fig. 11, on the black paper, to form the body of the note, and the tail of the note is to be afterwards drawn by using the other end of the style. The slide *k* is then to be moved on one space, as indicated by the falling of the click into the rack, and the second note is to be inserted in the same manner as the first. The tails of the notes are joined by bringing the slide *l* close up to the other, and then moving this latter as many

spaces back as there are notes to be joined, and then drawing the joining line. A fork, fig. 9, is inserted into the brass edge of the ruler *k* (as shown in fig. 1) as a guide, between the prongs of which any words, as allegro, &c., are to be written.

Further Details.

Fig. 1 is a top view of the instrument.

Fig. 2 is an elevation, the side *f f* being removed by drawing the screws *h h*: the side *f f* is shown by itself, fig. 13.

Fig. 3 is an elevation of the board, and of the slide *k*, at right angles to fig. 2: the same letters in each indicate the same parts.

The board *a c* is covered at top with tin plate, in order to oppose a firm pressure against the writing style. A sheet of paper previously damped is laid on the board, and is secured steadily in its place by pressing the wedges *e e* into the grooves *d d*, which they are represented as occupying; and this is done most conveniently by removing the side *f f*.

The side *f f* being now replaced, and the blacked paper being laid smoothly over the white one, the slide *k* is to be introduced, by placing the edges *m m* into the grooves *i i*, fig. 3.

The slide *k* consists of the following parts: a knob or handle to move it by; a spring click, composed of, *v* a stud, in which is inserted a steel spring, terminated by the wedge-shaped click *u*; a brass plate *q q*, secured by the screws *r r r*, having ten sets of lines raised on its surface, and its exterior edge being serrated with teeth, to indicate the position of the ledger lines; holes *w w* are also made intermediate between the raised lines, in order to receive the pin *x* of the fork, figs. 9 and 10, the

square extremity of which, *x*, takes into the holes *y y y*. There is also a series of holes *á á* on the slide, into any one of which may be put the pin *b'*, to show at what line the person using the machine left off, and therefore, where he is to begin again.

Figs. 7 and 8 are an edge and top view of the brass plate, of the full size.

Figs. 4 and 5 are the ruling slide; *l* the body, *m m* the feather edges of brass which are received into the grooves *i i*, fig. 8; *n n* a flap hinged to the body; *o o* the ruler, formed of pieces of stiff wire; *p p* the handle. This slide is to be introduced at the end of the board, fig. 1, opposite to that by which the slide *k* is inserted, and is to be brought up in close contact to *k*, so that the ends of the wires *o o* touch the ends of the raised lines *s s*; pressure being then made, and the ruling slide being at the same time slowly drawn out of the board in the direction *c*, the lines *b* will be ruled on the paper.

The slide *l*, of which fig. 6 is an edge view, is now to be introduced in place of slide *j*, and the musical notes, &c. are to be written as already described.

When the whole is finished, the peg, fig. 12, is to be introduced into the holes, beneath the wedges *e e* shown in fig. 2, and by moderate pressure, the wedges are forced up, and the paper may then be removed.

III.—TYPES FOR THE BLIND.

The GOLD VULCAN MEDAL *was this Session presented to Mr.* GEORGE GIBSON, *of Birmingham, for his* TYPES FOR THE USE OF THE BLIND, *a set of which has been placed in the Society's Repository.*

AT the Institution for the Blind, in Paris, the pupils were, more than forty years ago, taught to read by the Abbé

Sicard, who adopted a mode of printing in embossed characters, the forms of which, in consequence of their projecting from the paper, were easily recognized by means of that fine touch in the fingers which the blind are so often found to cultivate as a substitute, however imperfect, for eye-sight. Mr. Gibson, who has been blind from the age of three years, has also adopted a species of embossed letters, but has very ingeniously made them the foundation of a mode of writing and keeping accounts, available by the blind, and perfectly intelligible without instruction to those who can see. It is, indeed, not very expeditious, but besides being an amusement, is also capable of very useful application, since Mr. Gibson hereby keeps his own accounts, and writes many of his letters.

A cube of wood, or of any other convenient material, the size of which will depend on the delicacy of touch in each blind person, is to have raised on one side of it a letter, or figure, or stop, in the manner of a printer's type. On the opposite or lower side of the cube, is the representation of the same character as is on the upper side, but formed of needle points inserted into the wood. If, therefore, a piece of paper be laid on a cushion, or surface of felt, and the type be pressed down, the points will enter the paper, and form on the under surface of it a raised or embossed representation, by the projection of the burs where the points have penetrated, and this embossed character may be distinguished, and consequently read, by the touch.

In applying this ingenious device, the inventor has a shallow rectangular box, with a wadded bottom, on which the paper is laid. It is held firm by means of moveable bars which stretch across from one grooved side of the box to the other, and represent the spaces between the lines.

A case contains the types, placed in alphabetical order, also the ten numerals, stops, spaces, breaks, &c. in a

known and invariable order, which is soon learnt. The first letter of the first word intended to be written, is taken out of its case, is applied to the edge of the box, and touching the ruler; it is then pressed down, so that the edges of the points shall pass through the paper. The next letter is applied in the same manner beside the first, and when this is done, the first is taken away and put into its place, and so on till the word is completed. A blank type, forming the space between two words, is then placed, and the second word is then begun and finished as above described.

Mr. Gibson truly observes, that an objection may be made to the cost of the paper, as it can be written in this way only on one side, and the characters must be at least as large as full-sized printing capitals; but this objection he states is by no means so great as it seems to be, because waste writing paper, such as has been written over with pen and ink, will answer the purpose of the blind quite as well as any other.

In the course of the inquiry which the subject underwent in the Committee, a specimen was produced of a short devotional piece, executed in pricked characters, and used in the school for the blind at Zurich. Whether this was pricked by hand or by a rolling cylinder, similar to that by which dotted patterns are impressed on printed calicos, does not appear, but the invention seems at Zurich only to be used in teaching the blind to read, as being cheaper and more convenient in its application, than the embossed types of the Abbé Sicard.

SIR; Birmingham, May 2, 1827.

Annexed I hand you a complete explanation of the method by which I make my types, which I have no doubt you will fully understand; and with respect to the

apparatus, &c. I presented to the Society, it was always my intention that it should remain in the possession of the Society, if they thought it worthy of their attention. Of course I did never intend, after presenting it to the Society of Arts, to apply for a patent for the invention, it being my wish that the publication of it might be as useful to others as it has been to me. I feel highly gratified for the honour the Society has conferred on me, by voting me their Gold Vulcan Medal, and shall value it much more than any thing else that has ever happened to me in my life.

I am, Sir,

&c. &c. &c.

A. Aikin, Esq. For GEORGE GIBSON,

Secretary, &c. &c. M. GIBSON.

Reference to the Engraving.—Plate IV.

Fig. 1 represents an open box, and on the right hand an open drawer, which contains the apparatus for guiding the type, and in which the writing is to be performed.

Fig. 2 is an end view of the same in section; they are drawn one-fifth part of the real size: *a a* the surface on which the paper *b b*, fig. 1, is laid, it is made of different squares of green baize, or flannel, so as to form a soft and even cushion one quarter of an inch deep, in order to receive the impressions of the type through the paper without injuring them or preventing the bur. The box is one inch and a half deep above this bed or cushion; it is kept down by the frame or bars *c c c* and *d*; two brass racks *e e*, *e e*, are screwed against the end bars *c c*, to receive two moveable bars *f f* and *g g*; these serve to hold the paper *b b* down, also as rulers and as guides to

the type; *h h* is a drawer also, one inch and a half deep, to contain the nests of type *i i*, *j j*, and *k*, they are shown in section in fig. 2; each type has a separate cell, lined at bottom with a sufficient thickness of baize to receive the type points, and preserve them from injury. Each type has a raised letter on its top the right way up, and as the words are composed by feeling these letters, the writing is direct, while the type formed with pins at the bottom is always upside down. The writing being performed on the back of the paper, it is placed upside down, and the writing is begun on the bottom line, and proceeds gradually upwards; thus the puncturing type being upside down, enables the writer to begin at the left hand, and spell his words direct, as usual, to the right. The notches of the racks are just enough wider than the letters, to leave a space between the lines.

The writer begins by placing the bar *f f* over the lowest or rather nearest margin of the paper, and then with the right hand selects the first letter from its cell, suppose G for the name George, and beginning at the left, places it against the guide-bar, then with the left hand he presses it through the paper into the soft bed; he then takes the next letter, E, and places it against the bar close to the first, and presses it in; the first letter may then be removed back to its cell, and the third letter, O, taken and pressed in close to the second, which then may be removed, and the fourth brought, and so on till the word is finished; then a piece of ivory, *l*, is taken from the drawer, it is of the right thickness to form the space, and is placed against the last letter; the first letter of the next word is then brought and placed close to it, this leaves the right space to divide the words. Two types, S and O, are shown in fig. 1, as forming part of the name Gibson; the type S is ready to be removed, and the type N is to be brought and pressed down close by the O;

the name is then finished, and if no more is to be written on that line, the types are removed, and the bar *f f* placed one notch higher, for the next line. The bar *f* is made twice the width of *g g*, and fits into two notches of the rack, that it may hold firm and steady while arranging the types against it; two brass plates are fixed on its top, containing the alphabet and figures in raised characters, to initiate the pupil into the forms of letters and figures.

Fig. 3 is a side view of one of these bars. As the type last put in is the guide for the next, two sets of letters and figures are required; *m*, in the drawer, is a bar containing a line of pins; *n* is a short line of pins for making short lines; *o* is a pointed roller in a handle, which is also shown in section, for ruling marginal lines, or columns of pounds, shillings, and pence, the bar *g g* may be used as its guide. The nest *k* contains type with one, two, and three lines, to serve for one, two, and three farthings; also type with one, two, three, and four dots, made with so many pins, to serve for a comma, (,) semicolon, (;) colon, (:) and period. (.) The drawer and the writing-box being the same depth, the nests of type will shut in either. The space *p* in the lid, may be closed with a flap or doors *g g* to contain paper.

Fig. 4 represents a copper-plate or plates, with letters either cut out, or formed with holes, and upside down. Strips of thin lead and pasteboard exactly the same width as the copper-plate are provided. The copper-plate is to be placed upon the lead, the pasteboard being under it, and with a sharp-pointed instrument the holes to receive the pins are to be pierced through the plate, the lead, and pasteboard. The letter thus formed must be cut as shown fig. 7, to fit the chamber or recess *r r* of the mould, figs. 5 and 6. After the holes are filled with pins, as fig. 8, the pasteboard is to be separated from the lead, as fig. 9, so as to leave the points a certain length,

the lead must then be turned over the heads of the pins, which forms the skeleton of the type, as shown in the half mould, fig. 6. When placed in the mould, a small square rim, *s s* fig. 10, is sprung into the chamber upon the pasteboard, to keep it steady. Care should be taken that the type is quite upright in the mould, and sufficient room left for the metal to surround it. The metal used for this purpose is composed of eight parts Bismuth, five of lead, three of tin, which is fusible in boiling water, as metal which requires a greater heat would tend to soften the pins. The mould should be set upon sand to be filled with the metal. The impressions for the tops are raised with punches upon lead; the type to be filed or made even, and the letter cemented on with gold size, or any other cement.

Fig. 11 is a side view of the types when finished; they are all notched as at *t*, to distinguish the top from the bottom of the letter.

IV.—ICE SAW.

The LARGE SILVER MEDAL *was this Session presented to* W. J. HOOD, *Esq. Sen. Lieutenant, H. M. S. Hyperion, for an* ICE SAW; *a Model of which has been placed in the Society's Repository.*

SIR; Newhaven, Sussex, March 6, 1827.

IN reply to your letter of yesterday's date, I have to avail myself of the occasion of a friend going to town, to forward a drawing of a saw and frame for cutting through ice, and as I deem the invention to be a decided improve-

ment on that of the common method now in use by our Greenland vessels, and others accustomed to the necessity of its use. I beg to lay it before the public, through the medium of the Society, trusting that the same will be found useful.

I am, Sir,

A. Aikin, Esq. &c. &c. &c.

Secretary, &c. &c. W. J. S. Hood,

Sen. Lieut. H. M. S. Hyperion.

Sir; London, March 22, 1827.

My last letter, dated from on board His Majesty's Ship Hyperion on the 10th instant, claimed the favour of being allowed an opportunity of laying before a Committee of Mechanics a saw calculated to cut through ice with much fewer hands than is usually employed by our Greenland and Northern trade, when requiring the same; and as my stay in town is limited, by my presence being required at an early period on board, I have to hope that I may be allowed an early opportunity to explain the nature of the improvement. I subjoin a few remarks relating to the same.

I am, Sir,

A. Aikin, Esq. &c. &c. &c.

Secretary, &c. &c. W. J. S. Hood,

Sen. Lieut. H. M. S. Hyperion.

The common method now practised by our Greenland ships, and those connected with our Northern trade, when they have to cut through ice, is, to suspend a saw with a weight attached (similar to that represented in Plate V), from a triangle formed of three spars, with a block at the

fork, through which a leading rope is rove, to run it up and down. It is obvious that this rope will require ten or twelve men, and that to follow up the cut, four or five more must be stationed at the lower end of each spar, to carry the whole forward, making an aggregate of twenty-five to thirty.

By adopting the plan proposed by me, and shown in the model, the saw is constantly kept at its work. It will be seen, that the first and second position of the propeller only goes over a space equal to the versed sign of the arch made by the angle of elevation, which is equal to the cut.

The saw, after once being entered in the ice, will only require from two to four men to work it; and it need not be taken out of the ice till after the distance required to be cut through is accomplished. The saw can be guided by the lever in any direction, so as to cut the ice into pieces most convenient for removal, either by pushing them under the adjacent floor of ice, or by dragging them out of the ship's track to clear water.

Reference to the Engraving.—Plate V.

Fig 1, *a a a a a a* a sledge of open frame work, resting on the surface of the ice *x x*; *b* a transverse bar, passing through the lever *c c*, and forming the fulcrum on which it moves; *d* the handle of the lever; *e* a clamp or brace, consisting of two cheeks, one on each side of the lever, loosely pinned at top to the lever, and at bottom to the saw *f*; *g* a clamp similar to *e*, by which the weight *h* is hung to the lower end of the saw; *i* the propeller, an iron bar, terminating below in two claws, and at top in a fork, and suspended on the lever by means of a transverse pin *k*; *l* a weight, hung to the propeller at *m*;

n a transverse bar, limiting the motion of the handle end of the lever in an upward direction.

Figs. 2 and 3, *o o* two upright bars between which the handle end of the lever moves, and which therefore prevent it from swerving laterally.

V.—IMPROVED LOG-SHIP.

The LARGE SILVER MEDAL *was this Session given to Mr.* JAMES HOOKEY, *Midshipman, for his* IMPROVED LOG-SHIP, *a Model of which has been placed in the Society's Repository.*

SIR;

I SHALL feel particularly obliged by your laying before the Society of Arts, &c. a log-ship invented by my son, James Hookey, Admiralty midshipman on board his Majesty's ship Barham, recently sailed for the West Indies, with an improvement in the log and lead lines.

The advantages gained by this invention are, that it gives the distance the ship runs more correctly, as it remains more stationary in the water than the one now in use; and when required to be hauled into the ship, by giving it a sudden jerk, the toggle swivels round, and disengages the line from the spring, in consequence of which, the log-ship reverses its position, and may then be pulled into the ship with the greatest ease.

With respect to the lines, he recommends that they be saturated in a composition of oil, which makes them more buoyant and pliable, and prevents kinking; it likewise prevents their contracting, which in new line is about twenty feet in fifty fathoms.

As many serious accidents are likely to occur by getting a false depth of water, in consequence of the contraction

of the line attached to the lead, it becomes an object worthy of attention to prevent the possibility of such accidents taking place.

I am, Sir,

A. Aikin, Esq. &c. &c. &c.

Secretary, &c. &c. W. HOOKEY.

CERTIFICATES.

(Copy.)

HONOURABLE SIRS; Deptford Yard, January 17, 1827.

Agreeably to the directions in your letter of the 15th instant, to give my opinion on the model of a log-ship invented by Mr. James Hookey, mate of His Majesty's ship Prince Regent, I have this day tried it in the river, by rowing a boat against the tide, and am of opinion, it is in every respect the most complete invention for a log-ship I have ever seen, and trips with the greatest ease, either with a long or a short length of line being veered out. And I would humbly beg to recommend that models of it be made at this yard, to be sent to all the other yards, to be supplied to all ships and vessels when commissioned, as in the event of one being carried away, the carpenters of the ships might make them, so as always to have a spare one.

Honourable Navy Board. J. DOUGLAS.

These are to certify that I tried a log-ship, invented by Mr. James Hookey, Admiralty midshipman, on board the Supply, naval transport, during a voyage from the river Thames to Leith and back, and found it answer extremely

well; it gave the distance very correctly, by remaining more stationary than the old log, and when required to be pulled back to the ship, it disengaged itself with the greatest ease. I therefore recommend it to be used in preference to the old log, as I consider it very far superior.

Given under my hand, on board the Supply, naval transport, at Deptford, this 1st day of February, 1827. } H. I. K. WALKER, *Master.*

Instructions for using the Log-ship invented by Mr. James Hookey, of the Royal Navy.

Deptford Yard, February 16, 1827.

The eye in the line is to be put over the toggle, on the tail of the fish, and when the line is all run out from the reel, and it becomes taught, by giving it a sudden jerk, the toggle will swivel round; the fish will then reverse its position, float on the surface of the water, and may be hauled into the ship with the greatest ease. When it is necessary to shift the line at the head of the fish, knock out the peg that forms the eye, and the line will then disengage itself; and in attaching another line, make an eye in it, and pass it into the mouth of the fish perpendicularly, through which put the peg that forms the eye, and it will be quite secure.

The inventor strongly recommends that all log-lines and lines to the lead should be saturated for one hour in linseed and lamp oil, three-fourths of the former, and one-fourth of the latter, well mixed together; after which, hang them up to dry; contraction will thereby be prevented, which in all new lines is twenty feet in fifty fathoms; besides, by thus saturating them in oil before

they are used, they become more buoyant and pliable, and are prevented from kinking.

N. B.—The spring to the toggle may be fixed either on the upper or the lower side of the fish.

Reference to the Engraving.—Plate VI.

The log is formed like a fish. Fig. 7 represents one running out, and fig. 8 the same in the act of being pulled in; *r* the toggle, *s* the spring; the eye of the line is put on the toggle, which is then pushed under the spring; the flap-board *t* falls down, and the fish runs out. When the line is taught, a sudden jerk will make the toggle pass the spring, and let go the line; the fish then swings round, the flap-board *t* closes, and it is easily pulled in.

Fig. 9 shows the under side; the flap-board *t* is jointed to the fish by the strap of copper *v*, which passes round a pin *uu*, and this pin is held by the copper-strap *w*; the line is attached to the log by a loop which goes in at the mouth, and is held by a peg which forms the eye; the flap-board *t*, if made of copper, has a piece of wood rivetted to it in the middle to stiffen it; if made of wood, a slip of lead or copper *x* is rivetted on, to make it heavy enough to drop down readily when thrown in the water.

Fig. 10. A top view of one made thin and wide like a flat-fish; the spring *s*, which holds the toggle, is underneath, between the fish and the flap-board *t*; the spring may be above or below in either case.

VI.—SECURING THE DEAD EYES OF A SHIP.

The LARGE SILVER MEDAL *was this Session given to Mr.* J. WEEKES, *of the Royal Dock-yard, Chatham, for his mode of* SECURING THE DEAD-EYES OF A SHIP, *a Model of which has been placed in the Society's Repository.*

SIR, Chatham Yard, February 24, 1827.

You will do me the honour to lay the accompanying model and drawing before the Society of Arts, &c. as it describes a proposition of mine, calculated, I humbly conceive, to remove a great evil universally complained of by nautical men. Among the various evils with which they have to contend, there are few that excite greater anxiety than that caused by the extreme difficulty and danger experienced by the present mode of fitting the dead-eyes, in cutting away the lee shrouds or lanyards when a ship, in action or by the violence of a storm, carries away her masts at sea; for by the present mode of fitting them, in the event of the mast being carried away, the channel rail is torn off, and the dead-eyes to leeward are instantly dragged from the channel down nearly into the water, when the operation of disengaging the wreck from the ship becomes a work of the greatest danger.

Several officers who have been engaged in our great naval actions describe the dangerous situation in which many of our ships have been placed, and also those of the enemy, when their masts, by the effect of the shots, have been carried over the side of the ship, and dashing against it with tremendous violence, have baffled every effort to disengage it from the ship for a very considerable time, when

the service of the men was so urgently wanted on other important duties; and they have no doubt that many ships and vessels in a storm have foundered in consequence thereof.

The following extract from the Dumfries Courier, of October 14th, 1825, fully corroborates the possibility of such an event; viz. "We are sorry to state, that the ship Nicolas, of Maryport, coal laden, was totally wrecked while on her passage to Dumfries, during the severe gale of Saturday last, having been struck by a heavy sea, the mast went overboard and beat with such violence against the stern, that it soon went in, and the vessel foundered in ten fathoms water. Another vessel happening to be in company, the crew were picked up, and landed at the Cars on Sunday morning."

The accompanying model and drawing shows a mode of fitting the dead-eyes, by which, in the event of a ship or vessel carrying away her masts, the dead-eyes would remain in their stations, when the operation of cutting away the lanyards or shrouds can be effected with the greatest facility, and the wreck thereby readily disengaged from the ship, and the dead-eyes all remain in their places, to which the rigging of the jury-masts can immediately be attached.

It will also be seen by the model and drawing, that this is effected by means of a threadle or preventive bolt, which is secured by eyes wrought in the bolts, ordinarily employed in attaching the channel to the side of the ship; and also an eye wrought in the outer end of a sort of iron knee, or what is usually denominated a T plate, at all times employed for the support of the channel through which the threadle bolt passes to keep the dead-eyes in their places, and which has been highly approved by all naval officers who have seen it. Vice-admiral Stirling, in a pamphlet containing two letters to the Admiralty, on

professional topics, in 1825, mentions my proposition, in the last page, in these words: "They who have seen a lower mast carried away in a gale of wind will appreciate the ingenuity of Mr. John Weekes, of Chatham-yard, who recommends the channels to be so secured as to hold the dead-eyes in their places, and thereby enable men to get at the lanyards of the shrouds to disentangle the wreck." I therefore trust to have the honour of its being approved by the Society.

I am, Sir,

A. Aikin, Esq. &c. &c. &c.

Secretary, &c. &c. J. WEEKES,

Assistant to the Master Shipwright, Chatham-yard.

Reference to the Engraving.—Plate VII.

Fig. 1, plan of part of a ship's main channel, and fig. 2, elevation of the same. *a a a*, three of the bolts, as ordinarily made to secure the channel; *b b b b*, similar bolts, but with the addition of eyes *e e*, to receive the threadle-bolts *c c* and *c*; *d d d* T-plates, with the addition of eyes *e e e*, to receive the bolts *c c*. Thus with the simple addition of the eyes *e e* to the bolts and T-plates, and the threadle-bolts *c c* passing through them, the dead-eyes are secured from being stripped away, should the mast go overboard.

Fig. 3 shows one of the T-plates separate.

VII.—INSTRUMENT FOR MEASURING GRAIN, &c.

The LARGE SILVER MEDAL *was this Session presented to* W. CAFFIN, *Esq. of Woolwich Common, for his* INSTRUMENT FOR MEASURING GRAIN, *&c., a Model of which has been placed in the Society's Repository.*

SIR, Woolwich Common, March 5, 1827.

I HAVE to request you will be good enough to submit to the Society a model of a machine invented by me, for measuring, in the most accurate and expeditious manner, seed, corn, or any article in which struck measure is necessary. I have to request you will excuse any informalities in my manner of submitting this, which can only proceed from my ignorance of the usual forms.

I am, Sir,

A. Aikin, Esq.
Secretary, &c. &c.

&c. &c. &c.
WILLIAM CAFFIN.

Description of the Machine.—Plate VII.

The measures *d d*, fig. 18, are fixed vertically in a circular plate *f*, opposite to each other, with an axis between them, upon which they work between two other plates. On the top plate *y y* a hopper *w* is fixed, communicating alternately with the measures, and filling them; and on the opposite side, in the bottom plate *a*, is a hole, with a spout *z*, through which the discharge takes place. The plates are framed together by three pillars *b b b*, having double adjusting nuts *c c* on each, to regulate the distance of the plates.

The measures are moved by a handle or lever *e*, the motion of which is limited by the pins *g g*, which, while it presents one under the hopper to receive, places the other immediately over the discharging hole for delivery, so that the two operations of filling and discharging are going on at one and the same moment. The bottom of each measure is contracted, to retard, in a small degree, the discharge, so as to secure one measure to be filled before the other is emptied. A hole is cut in the top plate, over the discharging measure, by which it may be ascertained that it is always full, as well as that the whole contents are delivered: *x* is the handle.

Machines of the size of the model have been in use for six months past, for filling cartridges, and a boy delivers with ease 12,500 measures daily from one machine, in the most accurate and perfect way possible, and supplies his hopper himself.

Fig. 16 is a view, and fig. 17 is a section, of the instrument.

Fig. 18 shows the measures, with the plate and axis to which they are attached.

Fig. 19 is a top view of fig. 18, and fig. 20 is a top view of fig. 16, the hopper being represented by a dotted circle.

VIII.—SLIDING RUDDER.

The LARGE SILVER MEDAL *was this Session presented to Mr.* JOSEPH HILLMAN, *of Deptford, for a* SLIDING RUDDER, *a Model of which has been placed in the Society's Repository.*

SHIPS of war, and other large vessels, if they happen to strike the ground when riding heavily at anchor, or by falling on a sand-bank, are very liable to injure the

rudder, by tearing it away from its fastenings. To prevent this, Mr. Hillman proposes, that the lower part of the rudder should be made capable of sliding up into a cavity prepared to receive it, and of descending by its gravity into its original position, as soon as the vessel gets clear again. The changes in the construction of the rudder which Mr. H.'s plan will occasion, are represented in the subjoined figures, of which No. 1 is a broadside view, and No. 2 an aft view of the lower part of the rudder, together with the stern-post.

Fig. 1. Fig. 2.

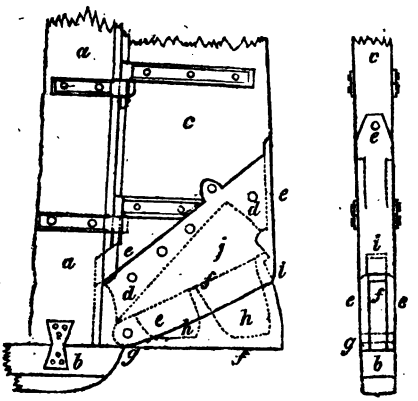

a a the stern-post; *b* part of the keel; *c* the rudder, the bottom of the rudder is cut away to the dotted lines *d d; e e e* is a hollow metal case, bolted on by the five bolts above *d d; f f* is a metal segment, turning on the pin *g*, and sliding within the case *e e;* this segment is made hollow from the top, in two compartments, as shown by the dotted lines *h h;* it falls down by its own weight, as shown in the figure, and is prevented from coming farther by a projection from its top, lodging on a step at *i*, within the case *e e*. The cavity *j*, from the bottom of the case *e e* to the dotted lines *d d*, is made,

large enough to receive the whole of the segment *f f*; if, therefore, the vessel should touch ground, so as to endanger the rudder, this segment would slide into the recess, and thereby avoid the blow, and fall out again to restore the length of the rudder when clear of the ground.

IX.—STOPPER FOR A CHAIN-CABLE.

The SILVER VULCAN MEDAL *was this Session presented to Mr.* J. B. KOOYSTRA, *Lieut. R. N., for his* STOPPER FOR A CHAIN-CABLE, *a Model of which has been placed in the Society's Repository.*

3, Queen-street, Golden-square,
January 17, 1827.

SIR;

I BEG leave to lay before the Society of Arts, &c. a model of an improved method of stoppering chain-cables in ships' lower decks. It has been successfully used on board His Majesty's Ship Barham, the ship I am appointed to.

I am, Sir,
&c. &c. &c.
JUSTUS B. KOOYSTRA.

A. Aikin, Esq.
Secretary, &c. &c.

The box containing the chain-cable is placed on the lower deck of a ship of war, and the chain passes through a stopper, formed of an iron hook or clip, secured to one of the beams that support the main-deck, by means of a bolt that passes through an eye in one end of the stopper. The stopper is thus placed in a horizontal position, and is

capable of moving on its bolt, so as either to pinch the cable, or to let it run freely. The stopper is closed or opened by means of a tackle, which is fixed on an eye-bolt in the lower deck, and requires eight men to manage it. The oblique strain which the tackle exerts on the stopper is very disadvantageous both to the stopper and to the tackle; this latter, indeed, so often gives way, that an additional one is always in readiness in case of accident. Mr. Kooystra omits the tackle, and supplies its place, by attaching to the loose end of the stopper a few links of chain, terminating in a screw bolt which passes horizontally through the nearest cross-beam, and is received at the other side into the hollow screw of a crank or winch, which, when turned by two men in one direction, or the contrary, causes the stopper to clasp or to release the chain-cable. The advantages contemplated by the inventor are two; namely, to substitute the labour of two men for that of eight, and to secure the stopper more effectually, and with less risk of accident.

Fig. 1. Fig. 2.

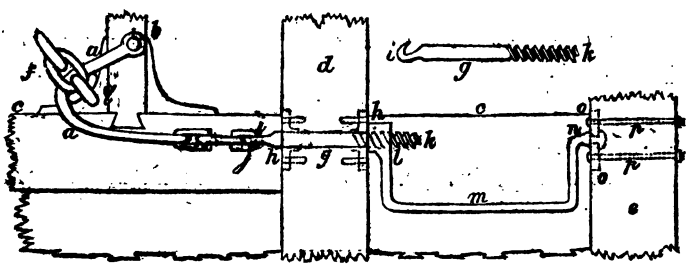

Fig. 1 is an under view of the part of the deck where the stopper *a a* is fixed; *b* the bolt or center on which it turns; *c c* the side of the hatchway; *d* and *e* portions of two beams; *f* part of the chain-cable held fast by the stopper; *g* a square bar sliding through the beam *d*, and through the square holes of the metal facing plates *h h*; *i* the hook on the end of the bar *g*, which takes the

link *j* of the stopper; *k* a double-threaded screw on the other end of the bar *g*; *l* the screwed end of a crank-handle *m*, fitted on the screw *k*; the other end *n* is well secured, yet so as to turn freely in the plate *o o*; *p p* the bolts which secure this plate to the beam *e*.

Fig. 2 shows the sliding-bar *g* separate. It is evident that on turning the crank *m* one way, it unscrews from the bar *g*, and as it cannot retreat (being stopped by the beam *e*), the bar is therefore slid through the beam *d*, and loosens the stopper, so that the links *j* may be lifted off the hook *i*, and on turning it the other way, it draws the bar *g* back, which pulls the stopper *a* after it, and presses the chain-cable *f* quite tight against the iron elbow *q*.

X.—CLOSET FOR OFFICIAL PAPERS.

The SILVER VULCAN MEDAL *was this Session presented to* W. J. CHARLTON, *Esq. of the War Office, for his* CLOSET FOR OFFICIAL PAPERS, *a Model of which has been placed in the Society's Repository.*

SIR; War Office, June 7, 1826.

I DO myself the honour of sending, for the inspection of the Society of Arts, a model of a press, which I believe differs from any hitherto in use. It has been approved of by all who have seen it, and its convenience I can speak to, having made use of it for some years in the War Office; it is particularly adapted for the use of the public departments of government.

I am, Sir,

A. Aikin, Esq. &c. &c. &c.

Secretary, &c. &c. W. J. CHARLTON.

P. S.—I have sent the model of the press situated in the *corner of the room*, as being the most intricate.

The press presents externally two doors, each carrying a set of shelves, which opens outward with the door, and is thus very accessible. Facing the moveable shelves is a similar set of fixed ones, besides another case, turning outward on a vertical pivot, and thus capable of being brought into view at pleasure.

By this arrangement the corners of a room afford much more accommodation than when fitted up in the ordinary way. Libraries, cabinets of Natural History, merchants' papers, &c. which, from their constant tendency to accumulate, often become inconveniently bulky for stowage in private houses, might be considerably reduced in the space they occupy by the adoption of this arrangement.

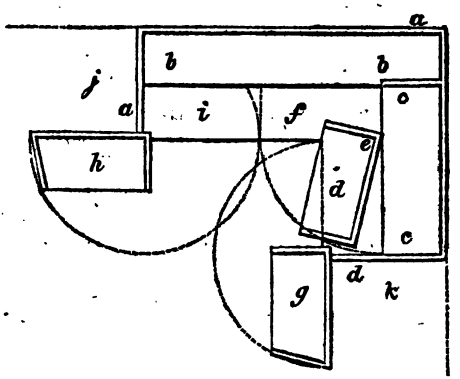

Reference to the Diagram.

a a a A horizontal section or plan of the closet; *b b* and *c c* two sets of shelves half the depth of the closet; *d* a smaller moveable set, hinged or jointed at *e*, this shuts into the space *f*, and then the set *g* will shut into the place now occupied by *d*; *h* a third set, shutting into the place *i*. It is evident that when *g* is open, access is had both to it and to the shelves *c c*; and, by opening or turning back *d* and *h*, as in the figure, access is had both to them and to the shelves *b b*. The spaces *j* and *k* are supposed to be occupied by other cases or furniture: the height and number of shelves are, of course, arbitrary.

XI.—DRAINING SYPHON.

The GOLD VULCAN MEDAL *was this Session given to* R. COWEN, *Esq. of Carlisle, for his* DRAINING SYPHON, *a Model of which has been placed in the Society's Repository.*

SIR; Carlisle, April 21, 1827.

IN submitting to the Society of Arts, &c. a communication on an instrument in such general use, and so well known as the syphon, I would particularly draw the attention of the committee to the fact, that though the theory of the syphon is universally understood, yet it has not been applied in practice for raising water over the highest levels, which the law of the atmospheric pressure and theory have assigned to it. On the common principle, I believe from twelve to fourteen feet rise has been the extent attainable in the practical uses of the syphon, although the weight of the atmosphere, at its lowest point of pressure, is an equipoise to a column of water of thirty-two feet in height. If a syphon of any height be filled with water, it may in theory be considered a torricellian vacuum; and it is only necessary to shorten one of the legs below the height of a column of water equal to the weight of the atmosphere, to give the other a preponderance, and the water begins to flow from the longer leg, and in theory should continue to do so. Water, however, has an affinity for air and some of the gases, and when exposed to them under the pressure of the atmosphere, absorbs a portion of each. This affinity, I believe, may be considered a given force; it is destroyed by boiling, and the air is expelled; it is also diminished as the atmospheric pressure is removed, and a portion of

air is set free at something less than half the weight of the atmospheric column. The weight of the opposing columns of water suspended in the two legs of the syphon, it is evident, must diminish the atmospheric pressure, at the highest bend, in an inverse ratio to the height of the shorter leg or column; when this exceeds twelve to fourteen feet, air is set free, displaces the water at the highest bend of the syphon, thus dividing the two columns, and entirely preventing that continuous flow which would otherwise take place were water to contain no gas or air. To devise means to remove this defect in the action of the syphon at the higher levels, is the object of the invention which I now submit to you.

I am, Sir,

A. Aikin, Esq. &c. &c. &c.

Secretary, &c. &c. ROBERT COWEN.

Reference to the Engraving.—Plate X.

Fig. 1, *a a*, part of the quarry to be drained; *b*, a level lower than the bottom of the quarry, which in this case is two hundred yards off, where the water is to be discharged; *c*, the highest ground, over which the water is to be conducted; *d e* and *f*, three different rises, over which the pipes pass—they are farther apart than here shown; *g g h h*, the lead pipe composing the two legs of the syphon; *i*, a forcing-pump, on the common principle fixed below the surface of the water, having a hinged valve at *j*, fig. 2, and an open working-box with a similar valve *k*. The two valves *j* and *k*, when the syphon is in action, are opened by the force of the water flowing through the pump in its passage to the syphon; *l* is the handle or lever for working the pump, which is placed at

a convenient height above the water at all times; *m* is a close iron receiver, shown larger in fig. 3, having inserted at one end, at the lower side, at *n*, the shorter or ascending leg of the syphon *g g*, and at the other end, at *o*, the longer or descending leg *h h*; at the upper side at both ends are inserted two air pipes *p p*, which may be small, joining with the syphon pipe at the highest bends, as shown at *d e* and *f*, with a regular slope into the receiver to allow the air to ascend into it, which would otherwise remain at the highest elevations of the pipe; *q* is a small valve fixed at the highest point of the receiver, to allow the whole of the air to escape through the valve when the water is forced up by the pump; for this purpose the pump *i* and pipe *g* must be able to supply water quicker than the pipe *h* will carry it off.

To put the syphon into action, it is only necessary to pump the water up into the receiver, to expel the air through the valve, and also through the longer leg of the syphon. The syphon will then continue in action without aid till the receiver is again filled with air, which is again expelled by a few strokes of the pump, and only requires to be repeated every twelve hours, when the rise exceeds from twelve to fourteen feet, varying with the unequal pressure of the atmosphere; but when less than the above height, it continues to flow without intermission for any given time, and acts on the principle of the common syphon.

The following are Directions to be observed in laying the Syphon to suit different situations.

1st. In laying the pipes of the syphon, it is necessary to give them a regular slope to admit the air to pass forwards

into the receiver, or to the highest bends, which must have either an air receiver to each bend, or a pipe inserted to convey the air into a general receiver.

2nd. When sufficient descent from both sides of the air receiver can be obtained, no air pipes will be required.

3rd. In situations where it may be necessary to carry the pipes over more than one elevation, and the second exceeds the height of the first, a separate receiver will be required for each elevation. On this construction, viz. with more than one receiver, it is necessary to adopt the following expedient for closing the valves in succession, as the air is expelled from each receiver.

Description to Figs. 4 and 5.

Fig. 4; *r* is the lower valve in the receiver *s*, which is opened by the force produced by pumping, and the air escapes; *t* is an inverted valve, with a float or buoy *v* fixed upon the valve-spindle in the centre of the cup *u*. While air only is expelled, the inverted valve will remain open; but when the water is forced out and fills the cup, the float will rise and close the valve at the same time; thus the water being stopped from flowing out, will be forced forward to any number of receivers in succession; *w* is a very small outlet-pipe inserted into the bottom of the cup *u*, through which the water escapes slowly; as the cup is emptied, the float is lowered, and the inverted valve again opened—a position necessary to allow the air to escape at the next pumping.

Another method described for closing the Valve.

Fig. 5; *q* is a valve placed in a cup, as shown in fig. 1;

on the cup is mounted a lever with a counter-weight x at one end, and a small pendant receiver y at the opposite end; z is a conducting tube inserted into the edge of the cup, to convey the overflowing water into the receiver, which as it fills, loads the valve, and prevents the escape of the water, and thus forces it forward as before described to any number of receivers. As it may be expected that the first cistern will collect the greatest portion or nearly the whole of the air, the others following in succession may be proportionally smaller.

In making the joints of the lead pipes, I used tinned copper hoops, and made the joints square or jump joints, and soldered them over in the common manner. The joints of the air cistern were made with iron cement, with a portion of red lead in powder added, and mixed up with oil, in place of water, as in the usual way, and caulked into the joint in the same manner as common iron cement.

Carlisle, Currock Cotton Works,
April 27, 1827.

Sir;

I beg leave to trouble you with a few observations, in addition to the communication on the improved syphon which I recently had the honour of submitting to the Society of Arts; and I would observe, in the first place, that in my former communication I have designated the air vessel an air *cistern*, but in the following remarks I have substituted what I conceive to be a more appropriate term—that of air *receiver*, an alteration I should wish to have made in the original paper and in the section.

On referring to the plan, it will be observed that the water delivered by the syphon passes through the air receiver, and must of course rest there a given time, or in proportion to the quantity of water in the receiver, compared with the quantity discharged, and the time will

consequently vary from a quarter to half an hour. This rest is necessary to allow the air to separate—as the affinity between air and water increases as the quantity of air held in solution diminishes, and *vice versâ*, and time is also required in addition to diminished pressure, to effect a complete separation. When the water has not had sufficient time to rest in the receiver, air bubbles collect in the descending leg of the syphon, and diminish the quantity of water discharged materially.

In the first experiment I had a small receiver with a screwed plug or cap at the top, attached to the highest elevation of the syphon, and an inch pipe, having a stop-cock, introduced between the syphon and the receiver, for cutting off the communication, to ascertain the quantity of air collected in a given time. When the syphon, under this arrangement, had been in operation a short time, the discharge gradually diminished, and in three hours nearly ceased. The two legs of the syphon were now plugged up, and the connexion cut off by means of the stop-cock, the cap unscrewed, and the quantity of air then in the receiver ascertained. The cap and stop-cock were again adjusted, and the descending or longer leg of the syphon shaken a little from the lower end upwards to the receiver. The stop-cock being again closed, and the receiver examined as before, it was found to contain a considerable additional quantity of air, and the water had consequently descended into the pipe and occupied the space, proving, I think pretty satisfactorily, the three following facts; first, that air had separated from the water flowing through the pipe; second, that it had not been carried forward, but had attached itself to the interior of the pipe, in small bubbles; third, and that air bubbles so attached increased the friction to such a degree, as nearly to prevent the discharge. This experiment was repeated with some little variation, and the

first result confirmed. The size of the large air-receiver was now determined, which I must remark was intended to be double the present size; and I had in the first instance two vessels connected together, but one of them on trial proving defective was detached, and the single one only used. The discharge, however, after twelve hours running, diminishes about one eighth to one tenth in quantity; but for several hours no apparent diminution takes place. Hence the necessity of allowing time for the water to rest in the receiver, by keeping a sufficient quantity in it, and of having the receiver of large capacity, compared with the size of the pipe.

It may also be necessary to observe, that the syphon was in full operation upwards of three weeks, without requiring any air to be forced out by the pump, no air for that period having collected in the receiver. This, however, occurred under the following peculiar circumstances:—on the 3rd and 4th of March, a very extraordinary quantity of snow fell, accompanied with a high wind, which drifted the snow into the quarry nearly to the summit; and for several days a rapid thaw, with a fall of rain, succeeded, which, together, filled the quarry with water to an unusual height, so as to reduce the column of water in the shorter or ascending leg of the syphon to 8·5 or 9 feet. After this period, the syphon required no pumping till the column had reached 14 feet, exceeding the height at the first commencement fully two feet, at which elevation air collected in the receiver, and it required pumping out night and morning. The barometric column, however, at the former period, stood at about one inch and a quarter lower than it did in the latter, which would make some difference, and should be taken into account; but it does not satisfactorily explain the whole difference, which would, in all probability, *exceed* two feet, as the syphon collected air from the commencement of the first trial, and the minimum of pressure at which air might

have then separated, could not be ascertained. It is not therefore *certain* that twelve feet is the minimum height at which air is set free, when the water is fully saturated. It is probable, under such circumstances, at a much lower pressure, as the above is a single instance in which the syphon operated for so long a period without pumping, and the only one with a mixture of snow-water. We have the authority of a number of eminent chemists (with the exception of Gay Lussac, and Humboldt), for supposing, that the water obtained from melted snow contains little or no air; and if the law of absorption be correct as established by Dr. Henry and Mr. Dalton, that water will hold in solution a quantity proportionate to the pressure, or if it absorbs one twenty-fifth under the pressure of one atmosphere, two twenty-fifths under the pressure of two, &c., the same law will hold in diminishing it below the pressure of one atmosphere to that of a vacuum; so that we might presume that in a syphon where water is fully saturated, air would separate at a much lower pressure; yet, whether it is that water is seldom fully saturated, or that the air is carried forward when it passes rapidly through the syphon, as is the case with a short one having a considerable fall in the longer leg, I shall not presume to determine, but, in practice, it does not collect under such circumstances in a common syphon of moderate height of five or six feet. A little more experience, therefore, and repeated observation, are necessary to determine the minimum height at which air will separate from water, and this will unquestionably vary with the proportion of air held in solution, with temperature, with the length of the syphon and the velocity of the water passing through it; and other circumstances.

I am, Sir,

A. Aikin, Esq. &c. &c. &c.

Secretary, &c. &c. ROBERT COWEN.

CERTIFICATES.

Howrig, near Carlisle,
April 21, 1827.

SIR;

Having had under my direction the improved syphon constructed by Mr. Cowen, for draining the stone quarry at Howrig, and being also acquainted previously with the great labour, expense, and difficulties, at certain seasons, in clearing away the water by the common pump, I can with great confidence give my testimony of its having answered fully the intended purpose. It is now comparatively managed with little or no trouble or expense, and by its regular unceasing operations, greatly contributes to the profitable working of the quarry.

The diameter of the pipe is only one inch, and it delivers, on an average, about 3,000 gallons of water per twenty-four hours. When the surface of water exceeds from twelve to fourteen feet below the bottom of the air cistern, a quantity of air collects, which requires to be displaced by a few strokes of the pump night and morning, but does not exceed, in the expanded state, more than from six to ten cubic feet. A few minutes each day are sufficient to expel the air, and the labour is so simple and easily performed, that any of the boys are equal to the task. It may be necessary to observe, that no air can possibly enter through the pump, it being completely immerged under the surface of the water; and that portion of the pipe which was at the surface of the water when the air began to collect, has been accurately examined, but no defect can be discovered, as no water issues from any part of it, even when the force of the pump is applied. I have great pleasure in being able to state, from considerable experience, the superiority of this method of draining such quarries, and am of opinion it is the most economical ever yet discovered, and may

be applied for draining other quarries in this neighbourhood, or to any purpose or situation where sufficient fall can be obtained.

I am, Sir,

A. Aikin, Esq. &c. &c. &c.

Secretary, &c. &c. WILLIAM WOOD.

SIR; Carlisle, April 18, 1827.

I have much pleasure in bearing testimony to the ingenuity and usefulness of Mr. Cowen's improved syphon. I lately accompanied Mr. Cowen and Mr. Studholme to Howrig, and examined the syphon, which was then in full operation, and appeared to answer effectually the purpose for which it was intended.

I am, Sir,

A. Aikin, Esq. &c. &c. &c.

Secretary, &c. &c. THOMAS BARNES, M. D.

Kingmoor House, near Carlisle,

SIR; April 26, 1827.

I have examined Mr. Robert Cowen's improved syphon, at present drawing water from a freestone quarry at Howrig, near Carlisle, which appears perfectly to answer the intended purpose.

I took levels and such dimensions as enabled me to draw a correct plan and section, showing the height which the syphon draws the water, and the lengths of its respective parts, which I suppose Mr. Cowen will send you.

I am, Sir,

A. Aikin, Esq. &c. &c. &c.

Secretary, &c. &c. JOHN STUDHOLME.

XII.—EXPANDING KEY FOR A LOCK.

The SILVER VULCAN MEDAL *was this Session given to Mr.* GEORGE MACHIN, *of Wolverhampton, for an* EXPANDING KEY FOR A LOCK, *a Model of which has been placed in the Society's Repository.*

IN this key the bit or lever which raises the tumblers, and shoots the bolt, is moveable on a countersunk pin, so that it may slide thereon, and thus be drawn one eighth of an inch from the barrel.

The hole in the escutcheon-plate is of such a length as to admit the key only when the bit is pressed close up to the barrel. When the key in this state is introduced, and is begun to be turned round, one of the notches in the bit takes into a raised circular edge of steel, placed eccentric with regard to the lock-pin; so that as the key is turned, the bit is drawn out, and is at its greatest elongation when it arrives at the tumblers, and other moveable parts of the lock; hence it is obvious that no common or skeleton key that could pass the escutcheon-plate would have a bit long enough to reach the tumblers, and shoot the bolt.

Reference to the Engraving.—Plate VII.

The wards *a a*, figs. 1 and 2, and *b b*, fig. 10, are made eccentric, the shortest distance being under the key-hole, and the longest towards the bolt; and the shortened key is provided with a sliding bit *c*, figs. 11, 12, 13, which is gradually brought out by the eccentric wards till it becomes long enough both to arrange the tumblers and move the bolt, and continuing to turn the

key round the sliding bit *c*, is returned or slid back till it is short enough to come out of the hole.

Fig. 1 represents the lock, having the front plates removed; *d d* the bolt, *e* and *f* parts of the tumblers under it; in fig. 2 the bolt is removed, to show these tumblers *e* and *f*; the tumbler *e* slides in the pieces *g g*, and the tumbler *f* slides in a recess *h h*, fig. 3, in the back of the tumbler *e*, and also in a recess *i*, made in the plate of the lock; this latter is shown in fig. 4, which is a section.

Fig. 3 shows the under side, fig. 5 the upper side, and fig. 6 an end view of the tumbler *e*.

Figs. 7 and 8, a side and top view of the tumbler *f*.

Fig. 9, an elevation of the tumblers in their places, the bolt *d d* being raised a little to show its locking pin or stud *j*.

Fig. 10, the inside of the plate which contains the upper ward *b b*; *k*, figs. 1, 2, and 4, the pin on which the key turns; *l*, fig. 2, the split or double springs which press down each tumbler. The eccentric ward *a a*, which slides out the key-bit *c*, by its gap *m*, is filed away at top to make room for the nib of the tumbler *f*, so that it cannot retain the key-bit *c* extended in that part, while the action of the springs *l* on the tumblers is urging it back; the bit *c* is therefore only kept extended in that part by the upper eccentric ward *b b*, which fits into the gap *n*; and as its action depends on that ward, a spring is put within the key which acts on the top of the pin *k*, and keeps the key in close contact with the upper ward. The key, fig. 11, is partly sectioned, and at different places, purposely to show the thin tube within the pipe which retains the spring and the loose metal plate *s* in their places; the sliding bit *c* is here close ready to enter the lock in figures 12 and 13; the bit *c* is shown extended long enough to move the bolt.

Fig. 13, being an end view, shows the thin tube within the pipe.

Fig. 14 shows the nib *o* of the key without the sliding-bit; it has a groove *p* for the end of a pin fixed in the sliding-piece *c*, to move in and keep it from coming off; *q q*, figs. 1 and 2, the ridge of the tumbler *e* against which the prominent end of the bit *c* acts; *r* the part of the key-bit which acts against the curved end *f* of the tumbler *f* to raise it.

XIII.—TRUSSED GIRDER OF WROUGHT IRON.

The SILVER VULCAN MEDAL *was this Session presented to Mr.* GEORGE SMART, *of King's Arms Wharf, Lambeth, for his* TRUSSED GIRDER OF WROUGHT IRON, *a Model of which has been placed in the Society's Repository.*

King's Arms Wharf, Lambeth,
November 17, 1826.

DEAR SIR;

I HAVE sent for the inspection of the Society a model of a wrought-iron beam of my invention, applicable for bridges, girders, breastsummers, roofs, or other purposes where stiffness, strength, and lightness are required.

I am, Sir,

A. Aikin, Esq. &c. &c. &c.

Secretary, &c. &c. GEORGE SMART.

The girder is made by welding an arched bar of wrought iron to a longer straight bar, and then turning the ends of this latter either up or down as may be most convenient for the particular use to which the girder is to be

applied. Fig. 15, Plate VII, represents the girder, *t t* being the places where the bars are welded together; *u u* the ends of the straight bar turned either up or down. The arch is prevented from giving way or buckling when the weight presses upon it, by means of blocks of well seasoned wood inserted at intervals between the two bars, and secured in their places by the iron straps *v v*, and which inclose both the bars.

Beams of wrought iron made in this way will, in Mr. Smart's opinion, support a weight so much greater than cast iron ones of equal dimensions, that they may be made of any given strength at half the cost of equivalent cast-iron beams.

This mode of forming bearing bars has been used in a new and ingenious manner, to sustain weights of extraordinary magnitude. A very heavy mass of brickwork, over a gateway leading from the Poultry, is supported in this manner, under circumstances which would have precluded the use of timber, and with a degree of permanent durability, of neatness, and of architectural propriety, which would not have been compatible with a timber support. The lateral thrust of a heavy brick arch over the same gateway is resisted by a similar contrivance. Mr. Smart recommends it strongly for bond joists, &c. as affording an easy way of securing angles and party walls, where, in consequence of the occurrence of chimney flues, it is not safe to use timber. Strong bridging and ceiling joists are easily made from wide hoop iron rivetted together, with a slip of poplar between them to hold the flooring or lath nails. Neither fir nor oak, if thin, will endure nails being driven into or through it without splitting, nearly so well as poplar will; and this wood, besides being very durable, if kept dry, has the advantage of being much less combustible than either of the former.

XIV.—MANGLE.

The Sum of FIVE POUNDS *was this Session given to Mr.* JONAS THURRELL, 2, *Little King-street, Camden-town, for his mode of producing the alternate motion of a* MANGLE BOX. *A Model of the same has been placed in the Society's Repository.*

2, Little King-street, Camden-town,
March 27, 1827.

SIR;

I WILL thank you to lay before the Society of Arts, &c. the accompanying model of a new and simple method of producing the alternate motion of a mangle-box, by turning the handle continually in the same direction.

I am, Sir,

A. Aikin, Esq. &c. &c. &c.
Secretary, &c. &c. JONAS THURRELL.

Reference to the Figures.—Plate II.

Fig. 1, *a a* the mangle-box; *b b* parts of the frame which support the axis *c c*; *d* the cranked handle; *e* and *f* two barrels loose on the axis *c c*; to the barrel *e* are fastened two cords, one of which, after making several coils round the barrel, passes from its *under* side to the eye *h*, where it is secured, while the other, after having in like manner coiled round the barrel, is also delivered from its under side to the eye *g*. To the barrel *f* are also fastened two cords which being delivered from the *upper* side of the barrel, are respectively fixed in the eyes *i* and *j*. The part *k* of the axis between the barrels is made square, and is cut out longitudinally, to receive the lever *l*, which is secured in its place by a pin, but so as to allow of lateral motion between the two barrels; each of

these barrels has a stud *m* and *n*, so placed that the lever may be shifted to engage either of them, and consequently, to oblige that barrel with which it may be engaged to revolve together with the axis; *o* and *p* are two alternating irons, each with an eye at one end, through which a pin *q* passes, in order to fasten them to the mangle box; their height above the box is such as to allow them just to clear the axis when passing under it, and the motion of each is limited, but on opposite sides, by the adjusting pins *r r*.

The figure represents the lever *l* as engaged with the stud *n*, and consequently, as fixing the barrel *e*; now if the handle is turned so as to wind up the cord *h*, the cord *g* will proportionally unwind, and the mangle box will move from left to right, till the end *l* of the lever comes in contact with the alternating iron at the point *o*. By continuing to turn the handle, the end of the lever slides from *o* to the end of the iron, and is brought into the position shown by the dotted lines; the stud *n* is consequently disengaged, and the barrel *e* becomes loose; at the same time the lever engages the stud *m*, and fixes the barrel *f*. The handle being still turned in the same direction as at first, begins to wind up the cord *i*, and thus makes the box begin to move from right to left, the cord *j* at the same time unwinding proportionally. When the left hand alternating iron has begun to come under the axle, the end of the lever will touch it at *p*, will slide along it to the point of the angle, and in so doing will bring it to the position shown in the figure, the barrel *e* being now fixed, and the barrel *f* being loose. Thus is accomplished the production of an alternating motion of the box, by continuing to turn the handle always in the same direction.

The back of the lever *l* is bevelled off, so that if the handle is turned in a wrong direction, it passes between

the studs *m* and *n*, and, not engaging either barrel, produces no motion of the mangle-box.

Fig. 2, one of the barrels separate.

Fig. 3, the square middle part of the axis, showing the slit in which the lever traverses.

XV.—CAP FOR A MALT-KILN.

The LARGE SILVER MEDAL *was this Session presented to Mr.* WILLIAM HENRY PERKINS, *of Stanstead, Herts, for his* CAP FOR A MALT-KILN; *a Model of which has been placed in the Society's Repository.*

SIR; Stanstead, Herts, November 1, 1826.

HAVING made a considerable improvement in Malt-kilns, by substituting a cap, in place of the usual cowls, I shall be glad to obtain the approbation of the Society of Arts, and will attend with a complete model thereof, on being favoured with notice when the subject will be taken into consideration.

I am, Sir,

A. Aikin, Esq. &c. &c. &c.

Secretary, &c. &c. WM. HENRY PERKINS.

The common cowl of a malt-kiln is a long, somewhat conical, cap, open at one side, and having the vane or arm so fixed, that, as the wind shifts, the cowl shall turn on its spindle, and always present the boarded or closed side to the weather. This prevents drifted rain from beating in; but in showers, when the wind is still, the wet readily finds its way in: this, if the floor is loaded with malt,

retards the drying of it, and, if empty, rusts the iron wire of which the floor is composed, except it is covered with sacks, straw, &c.

Another inconvenience attending the common cowl is, that it prevents all accurate regulation of the fire, except by varying the supply of fuel; so that in making the high-dried malt, it is by no means uncommon for the grain on the kiln to take fire, to its own certain injury, and the imminent hazard of the premises. Mr. Perkins's cap, by enabling the chimney to be opened, or, if necessary, entirely closed, offers additional security against these accidents.

Felix Booth, Esq. of Brentford, in a letter dated 1st May, 1827, reports to the Secretary of the Society, that he has made trial of Mr. Perkins's cap for the last three months. He has found that a saving in fuel has resulted from its use, and that the malt has been benefitted by the facility which the invention affords, of regulating and varying the heat according to the increasing dryness of the malt, and other circumstances.

Reference to the Figures.—Plate II.

Fig. 8 represents the turn-cap *a a a*, and neck *b b* in section; *c c* a square iron bar, or spindle, sliding through a square hole in the middle of the iron plate or bar *d*, and through another in the middle of the beam *e*: the cap *a a* turns upon the upper cylindrical portion of this bar, and the bar itself is supported, and hangs, entirely on the chain *f*, attached to the pully *g*, which is mounted in a carriage on the beam *e*; on the same axis is a larger pully *h*, with a chain attached to it at *i*, and from which a weight *j* hangs, sufficient to balance the weight of the sliding-bar *c*, and turn-cap *a a*. By raising the weight *j*

the cap is lowered, and finally shut, and on lowering the weight the cap is raised quite up, or held at any intermediate height.

Fig. 9 is a section of the neck between the bars *d* and *e*.

Fig. 10 a top view of the bar *d*, showing the hole through which the spindle passes; *k*, fig. 8, is a similar iron bar across the cap *a a*.

The chain *f* should be attached quite close to the bar *c c*, to lessen its tendency to lean on one side.

XVI.—IMPROVED CAT-BLOCK.

The Silver Vulcan Medal *was this Session presented to Mr.* J. Bothway, R. N. *for his* improved Cat-Block; *a model of which has been placed in the Society's Repository.*

13, Clowance-street, Devonport,
December 16, 1825.

Sir;

I assure you that you will lay before the Society for the encouragement of Arts, Manufactures, and Commerce, the accompanying model of an improved metal cat-block, for the use of the royal navy, and for merchants' service, which I have had the satisfaction of inventing, and which, under the sanction of the Public Boards, has already been introduced into several of His Majesty's ships, with every prospect of its proving so eminently useful, as to receive universal adoption.

In the course of a long period of service in the royal navy, having observed how many valuable seamen have been lost overboard, when getting under weigh in a fresh

gale, in consequence of the unwieldy bulk of the old cat-blocks, I have for several years been labouring to produce something that should obviate this evil; and I trust the invention I have now the honour of submitting, will fully realize the expectations that are formed of it, not only by myself, but also by every experienced officer before whom the block has been exhibited.

The following are the advantages which my block possesses over that which is now generally in use.

In all large class ships in the royal navy, when applying the usual cat-block, the unwieldy nature of the machine requires, that two men be sent out on the anchor, a most perilous service in rough weather, whereas mine only requires one man at any time, because he has not to sustain the whole weight of the block, as in the former case, but only that of the hook. And in vessels smaller than line-of-battle ships, in blowing weather, when the ship pitches heavily, the anchor may be hooked without the man going on it, by his standing on the head, and guiding the hook of the block to the anchor by a staff and hook, similar to a boat-hook; this facility is gained by the mobility of the swivel in its socket, so that the man has not the weight of the block to turn in order to insert the hook in the ring of the anchor. Should the anchor be hooked in the dark or otherwise by a turn in the fall, the hook being on a swivel and joint, will come out before the strain comes on the block; and when the anchor is foul, it can also be hooked with great facility.

In my thirty-two years' service, I have seen the wooden cat-blocks swell so much in cold climates, that the sheaves have become immoveable; mine, being of metal, are not liable to this inconvenience.

In point of strength and capability to bear a sudden jerk, they have been well tried in the Royal Dock Yard, at this port.

The metal blocks being of far less bulk, are considered even lighter than the wooden ones, with their iron bindings, capable of the same service; for example, take the metal block of the Warspite, the only line-of-battle-ship I have fitted; the wooden cat-block weighed 3 *cwt.* 2 *qrs.* 5 *lbs.*, whereas the metal one weighs 3 *cwt.* 1 *qr.* 26 *lbs.*, and this latter is large enough for our first-rates.

Another great advantage may be derived from this invention, namely, that the same block may be applied to other uses, whereas the old ones cannot; for instance, by merely having a spare socket or two fitted with hooks of various sizes, it may take a strap for gear blocks; or it may be converted into a lashing block, without the hook and socket, but with the socket bolt.

The two models herewith sent, namely, the metal block on my principle, and the wooden block, are made on a scale of three inches to a foot, for a large class frigate.

I have had the honour of fitting the following ships in the royal navy with these blocks, viz. Warspite, Druid, Success, Harlequin, Bustard, and Trinculo, all of which, except the latter, that has been recently fitted for the Irish station, are gone on foreign service.

I have only further to state, that I am ambitious of some mark of approbation from the Society, whose liberality has already been experienced by me on a former occasion.

I am, Sir,

A. Aikin, Esq.
Secretary, &c. &c.

&c. &c. &c.
J. Bothway,
Royal Navy.

TESTIMONIALS IN FAVOUR OF THE IMPROVED CAT-BLOCK.

April 27, 1827.

We, the undersigned officers, do hereby certify that we were present on the trial of the strength of a metal cat-block invented by J. Bothway, R.N. in December, 1825, in his Majesty's Royal Dock-yard, Plymouth. The above block was made suitable for a sloop of war; an anchor of two tons was hoisted up by it to a crane, the runner was stoppered, and the parts of the fall overhauled; the stopper then cut so as to enable the anchor to come down with a heavy surge clear from the ground. The block was afterwards examined by the officers, and was found quite perfect; the honourable commissioners of the navy then ordered it to be supplied to His Majesty's sloop Success.

(Signed)

J. JACKSON,
Master Attendant.

N. B.—The temporary absence of the other master attendant prevented the obtaining of his signature for the present.

SIR; Devonport, April 16, 1827.

Having used and experienced the invention of your cat-block, I am fully convinced it is the most superior article that has ever yet been invented, especially for large ships, where the block cannot be handled without great strength and danger of men's lives when standing on the anchor in a sea way; not only this, but the purchase is greatly improved by the hinge being attached above the swivel, which makes the block work fair to the

sheaves in the cat-head, and I would strongly recommend it to owners and masters commanding large ships,

I am, Sir,

&c. &c. &c.

Mr. Joseph Bothway. (Signed) JAMES FRY,
Commanding the Brig Amelia.

SIR; Devonport, April 30, 1827.

I have much pleasure in acknowledging to you the report which the master of the brig Amelia has made on your much improved cat-block, which I had on your principle, and from its peculiar construction, I think it has a great advantage over the common cat-block.

I am happy to say that the master is very much pleased with it, and would recommend it for its great utility and safety.

I am, Sir,

&c. &c. &c.

Mr. Joseph Bothway. SAMUEL FRY,
Ship Owner.

Reference to the Engraving.—Plate VI.

Figs. 11 and 12 are a side and front view of the block. The bolt *a* passes through three rings or eyes, one at each end, and one in the middle of the frame, that contains the sheaves; the swivel-pipe *b* hangs loose upon the bolt, so that it has a free motion backwards and forwards; the middle of the swivel-pipe bends down, forming a socket, which supports the swivel-head *c* of the hook *e*.

Figs. 13 and 14 are a top view and section of the swivel-pipe.

In order to fit the block for the other uses alluded to in Mr. Bothway's letter, the bolt *a* is to be withdrawn, and the swivel-pipe with its hook removed, and in their place is to be inserted the looped pipe, fig. 15.

XVII.—REVOLVING LIGHTS FOR STEAM-BOATS.

The LARGE SILVER MEDAL *was this Session presented to* JOHN HAWKS, *Esq. Upper Thames-street, for his* REVOLVING LIGHT FOR STEAM-BOATS, *a Model of which has been placed in the Society's Repository.*

Duck's-foot-lane, Upper Thames-street, London,
June 7, 1826.

SIR;

THE fatal accident which occurred to the passengers and crew of the Comet steam-packet, although generally deplored, seems still not to have excited the ingenuity of the public, or to have been passed by, like all other calamities, without a remedy. The cause of that accident was certainly attributable either to having no light at all, or so placed as not to be sufficiently discernible.

Within a short time of that accident, I invented a revolving light, which I think, if brought into use, would prevent the chance of a similar calamity; but, like all others who may have thought on the subject, have not yet made it public, from having been very much engaged.

I have shown the model to some scientific and ingenious friends, who have requested me to make it public, through the Society of Arts, &c. &c., and have therefore to request that you will do me the favour to lay the same before the earliest possible committee, in order that, if it shall

prove worthy of the Society's notice, no further time may be lost in publishing the invention previous to the ensuing winter.

I am, Sir,

A. Aikin, Esq. &c. &c. &c.

Secretary, &c. &c. JOHN HAWKS.

Reference to the Engraving.—Plate VII.

Fig. 4, a front view; fig. 5, a side view. *f f* the chimney of the boat, or a strong upright spar; *g g* a projecting horizontal spindle, on which the frame which carries the lights revolves; *h h* two arms connected by the cross bars *i i*, to which are fixed the lanthorns *l l*; *o o* a connecting rod which receives its motion from the spindle *g*, by means of the crank *m*, and communicates it, by means of the cranks *n n*, to the bars *i i*, and consequently to the lanthorns [fig. 6 shows separately one of the lanthorns with its cross bar and crank]; *j* is a pulley over which passes the band *k k*, which is to be connected with the steam-engine in any convenient manner, and by which a rotatory motion is given to the lanthorns. The ends of the bars *h h* revolve in the lower dotted circle *p p*, while those of the bar *o o* revolve in the upper dotted circle *q q*; the consequence of this arrangement is, that the lanthorns will be fixed so as to prevent them from being shaken about by the wind, and will retain a vertical position at every point of their revolution.

The following are the Regulations relating to this subject to which the Steam-boats navigating the Clyde are subjected by the Trustees of the River and of the Har-

hour of the Broomielaw, as printed by order of the House of Commons, May 12, 1826:—

When two steam-vessels meet, going in opposite directions, each shall slack its engine as soon as the vessels come within thirty or forty yards of one another, and shall keep to the left or larboard side.

If two steam-boats are going in the same direction, and the fastest is astern, as soon as the latter comes within thirty yards of the slower-going one, this shall slack its engine, and go to leeward till the faster has got thirty yards at least a-head.

All steam-vessels at night or in foggy weather shall slacken their speed to four miles an hour at the utmost.

All steam-vessels shall have a bell capable of being attached to the machinery, so that in foggy weather it shall be continually ringing.

All steam-boats shall have a triangular light hung a-head, or placed in a conspicuous part of the bow of the vessel, from sunset to sunrise.

It appears also from a letter written to Mr. Hawks, by Mr. J. Miller, secretary to the Margate Steam-packet Company, that their vessels have for the last two years hoisted a triangle light at the foremast head after sunset.

But sailing vessels occasionally hoist triangle lights; and therefore a mere triangle light is not a sufficient distinction for steam-boats; but by making the lights, whether two or three, to revolve, by attaching them to the machinery, no mistake could possibly arise. It was also mentioned in the committee, and the suggestion deserves notice, that a further advantage would accrue from having the stern half of one of the lanthorns green, or any other readily distinguishable colour, as it would serve not merely to point out a steam-boat, but also to show in what direction she is going, and thus give still

greater facility in avoiding her. If, for example, a vessel on her course descries a-head two steadily revolving lights, one of which is white and the other green, it is evident that a steam-boat is in that place, and going in the same direction as the other vessel; but if both the lights are white, it is plain that the steam-boat is bearing down, and that due care must be taken to avoid her. The same advantage might also be obtained by causing the lights of every steam-boat to revolve in one and the same direction.

The shock of any two sailing vessels falling aboard of each other at sea will not unfrequently sink the smaller one; and the probable mischief to be apprehended from two steam-boats in similar circumstances is greatly increased both by the greater velocity of the vessels, and the weakness of their construction.

XVIII.—SELF-ILLUMINATING CLOCK.

The LARGE SILVER MEDAL *was this Session presented to Mr.* J. P. PAINE, 39, *High-street, Bloomsbury, for his mode of* ILLUMINATING PUBLIC CLOCKS, *a Model of which has been placed in the Society's Repository.*

39, High-street, Bloomsbury,
April 8, 1827.

SIR;

THE model I have this day the honour to exhibit to your consideration has long occupied my closest attention, as I consider there is no object to which mechanism is applied of more importance than our public time-keepers, and which I lament have by no means kept pace with the improvements introduced into other branches of the arts.

It is true the hands continue to perform their revolu-

tions; but for six months of the year they are nearly half their time useless; and even for the remainder, we lose their service during one third of the time. To remedy this defect is the object of my invention, in effecting which I have endeavoured to combine utility, elegance of appearance, durability of material, simplicity of operation, and economy.

The model is made to the quarter size of a six-feet dial, the average size for churches. It may be termed a skeleton dial, the usual blank spaces being perforated, and the hours and minutes left in the solid, in the exact situation in which they are placed in a well painted dial, in Roman characters. The material is of cast-iron, and in the full size will be about five eighths of an inch thick; the spaces are filled in with coloured glass, and the light so diffused from the inside, that not only the hour, but even the minutes, may be distinctly seen by night; and during the day the deep colour of the glass will give the clock face a dark appearance; this is not to be obtained by using common ground glass, which shows white, and looks poor with only a black letter painted on it.

The model also exhibits a plan which, by the revolution of the motion of the hands, with the addition of only one wheel and pinion, lights up the dial itself, and extinguishes the same at any period of time that may be necessary, and by simply withdrawing or adding a pin once a month, according as the days increase or decrease in length, it will vary its time of operation accordingly; so that whether it is required to be lighted at four o'clock in the afternoon, and to burn till eight in the morning, or not to light up till nine at night, and to be put out at three, as in the longest and shortest day, it is always punctual in its operation at the given period. I trust the simplicity of the means by which this is effected will meet your approbation. The dial being made of framed

work, allows of its being glazed with small pieces, and therefore, if broken, of being restored at a trifling expense; the joints of the glass are behind the letters, and thus any indistinctness which might otherwise be occasioned by them is avoided. I shall be happy to exhibit the model in full operation before the committee, at any time that they may appoint.

I am, Sir,

A. Aikin, Esq. &c. &c. &c.

Secretary, &c. &c. J. P. PAINE.

Mr. Paine's object is to render the dial of a church or other turret-clock visible by night, and also to obviate the necessity of a person going twice every day up to the clock for the purpose of lighting and extinguishing the jet. During the day no more gas is expended than is sufficient to keep up the smallest possible flame, and during the night the flame is large enough to answer the intended purpose. The actual consumption of gas in the clock of St. Giles's church, fitted up by Mr. Paine himself, is fourteen cubic feet during the day, and fifty-six cubic feet during the night.

Certificates were produced from the parish officers of St. Giles's, highly approving Mr. Paine's plan; and at the last meeting of the committee on the subject, on the 21st of May, it appeared that the jet had continued constantly alight for a month.

The illumination of public clocks is practised with more or less success in various places. At Glasgow the jet is on the outside of the dial-plate: and at Manchester the mode of illumination from within has been for some years adopted; the light, however, is not regulated by the motion of the clock, as in Mr. Paine's dial, but the jet is lighted and extinguished by hand like other gas-lamps.

References to the Engraving.—Plate VIII.

Fig. 1 represents a skeleton frame dial, cast all in one piece; the eight central divisions are very thin, and curved, so as not to coincide or interfere with the hands while passing over them; the spaces are all filled up with transparent red glass, ground rough on the inside; this by day is sufficiently dark to relieve and render distinctly visible the gilt hour numbers; but at night when the gas-burners behind the dial-plate are lighted up, the hours, minutes, and hands appear black, and the rest of the dial glows with a dusky red light.

Fig. 2 is a horizontal section across the aperture *a a* in the church tower at the back of the dial *b b*; *c* the tube which carries the hour hand, having a balance weight and the wheel 48 on its inner end; through this passes the shaft *d d*, holding at one end the minute hand, and at the other end the pinion 14, and balance-weight *e*; *f f* two gas burners; *g g* the tubes supplying the gas—they branch from the upright tube *h h*, fig. 3; the aperture *a a*, not being as large as the dial, is chamfered off at *i i*, to give a clear passage from the lights all over the dial; *j j* a curved reflector, made of sheets of tin; *k k* a bar crossing the aperture *a a* within to support the motion wheels and the additional twenty-four-hour wheel 96; the long axis *d d* receives motion from the clock, as usual, by a bevel wheel; 14, 42, 12, and 48, fig. 5, are the usual motion wheels and pinions; an additional pinion of 12 is put on the wheel 42 to turn the wheel 96, this has thirteen pins, one hour's motion apart; these pins have raised up the weighted lever *l* in fig. 3, and are near letting it drop; while this is up, its opposite end *m*, by means of the connecting rod *n*, keeps the lever handle *o* of the gas cock *p* down, and thus nearly closes it, allowing the pas-

sage of only just enough gas to keep the burners alight; but at eight o'clock, when the weight *l* drops, it raises the handle *o*, and quite opens the cock *p*, by which the dial is instantly illuminated. It will be seen by the dotted place of the lever *l*, fig. 3, that there are seven hours before the first pin will touch it, and two hours more will quite raise the lever, slowly closing the cock *p* as at first, where it will remain till all the pins have passed the lever.

Fig. 4 represents the lever *l* down, and the pins nearly beginning to raise it; by removing two pins, one at each end, the clock will open the gas-cock one hour sooner, and nearly close it one hour later. By successively removing the pins as the days shorten, and replacing them as the days lengthen, the clock is accommodated to all seasons.

Fig. 4 shows the wheels arranged in one line on one bar *k k*; fig. 5 is a top view of them. The whole space is kept clear between the lights and the dial, except only the axis *c*, fig. 2; and the lights being placed on each side of this, and having a large reflector, no shadow is perceived from it.

XIX.—IMPROVED LATHE CHUCK.

The Large Silver Medal *was this Session given to Mr.* J. Bower, *of Clerkenwell-green, for his* Improved Lathe Chuck, *for Engine-turners, a Model of which has been placed in the Society's Repository.*

Sir; May 9, 1827.

I beg leave to submit, for the consideration of the Society of Arts, the accompanying lathe-chuck, the object of which is to *turn*, if so it may be called, a straight

line of any given length which the height of the lathe will admit of, and any segment of a circle with the ordinary rotatory motion of the fly-wheel of the lathe.

The straight line chuck at present in use requires the lathe to be turned backwards and forwards, for the length of line required with a very slow motion by hand, which leaves the workman but one hand at liberty for the management of his tool, and no other means but the eye to guide his work.

The principal object of this chuck is to assist the inexperienced workman in engine-turning, and amateur turners to make their stops at any given part required.

The two specimens sent are merely to show the accuracy with which the length of lines and parts of circles may be obtained, with a very great saving of time; the chuck at present is in a rude unfinished state, but time would not allow me to finish it more completely, as I particularly wish the opinion of the Society concerning it during the present session. Should the Society require any further information, or have a wish to see it at work, I shall be happy to wait upon them at the time appointed, having the lathe that it is made for in hand, in a forward state; and should the Society think it worthy of any honorary reward, I shall feel a pleasure in placing either drawings or a model in the repository of the Society.

I am, Sir,

A. Aikin, Esq. &c. &c. &c.

Secretary, &c. &c. JOHN BOWER.

The straight line or chuck at present in use among the engine-turners requires to be moved backwards and forwards by one hand, with a very slow motion, leaving the workman only the other at liberty for the management

of the tool, and no guide for the truth of his work but the eye.

The chuck invented by Mr. Bower produces the alternate motion of the work by the continued movement in one direction of the mandril of the lathe, and enables the workman to make his stops with accuracy at any part that may be required.

This is effected by placing on the mandril a plate which has an eccentric stud loosely attached to one end of an iron bar, the other end of which is in like manner attached to the extremity of a brass arm projecting from a plate, which thus receives an alternate sliding motion; to each end of this sliding piece is fixed a chain, the middle of which is coiled round the axis of the mandril which carries the work, and thus gives it a movement of rotation first in one direction and then in the other; or, by the removal of a pin, converts the alternate rotatory, into an alternate sliding, motion. The tool is fixed in a slide rest.

Trial was made before the committee, of Mr. Bower's chuck, and from the testimony of several professional engine-turners and mechanics who were present, it appears to be a decided and important improvement on those now in use.

Reference to the Engraving.—Plate IX.

Fig. 1 is a front view of the lathe head; fig. 2 a side view.

Fig. 3, the same, partly in section, and fig. 4 a top view; *a a* the head which supports the mandril *b*; *c c c c* the additional part; it is a metal box, having the parallel steel bars *d d* and *e e* firmly screwed to it; this is fixed

to the lathe head by screws, and then forms part of it; the screw of the mandril *b* projects through the bottom of this box, to receive the brass chuck *f f*, figs. 1 and 3. Fig. 5 shows the chuck separate; this chuck *f* contains an adjusting screw to move the sliding stud *g* to or from the centre; *h*, a bar connected to the stud *g*, and at top by a double stud *k k* to a sliding-plate *i i*, shown separate in figs. 6 and 7; this plate slides between the bars *d d*, fig. 4. The stud *g*, while describing a circle, communicates an up-and-down motion to the plate *i i* exactly the length of its diameter, by means of the connecting bar *h*; a hole *j* is made in the side of the box *c c*, fig. 2, to introduce a key to the adjusting screw of the stud *g*, and fix it for the required length of line. Between the parallel bars *e e* slides another plate *l l*, shown separately in figs. 8, 9, and 10; to this plate is attached the sliding frame *m m* of the eccentric chuck.

Figs. 8 and 10 show a steel ring *n* let into the plate *l*, to form a true bed for the frame *m*, fig. 9, to turn on.

Fig. 11 is an end view of the sliding frame *m m*; *o* the axis which passes through the plate *l*, and is then squared to receive the chain roller *p*; the frame *m*, the plate *l*, and roller *p* are then secured together by the screw *q*.

Fig. 12, *r* the sliding plate and stud on which the chuck *s*, shown in section, turns. The eccentric chuck, though fixed to and turning on the plate *l*, receives its circular motion from the sliding plate *i*, by means of the chain attached to that plate by the studs *t* and *u*, after passing round the roller *p*, to which the middle link is attached: *v* the screw which moves the slide. When turning a straight line, the sliding plates *l* and *i* are secured together by a pin passing through the hole *w*, or *á*, fig. 9, and through the adjusting piece *x*, which slides along the opening *b'*, fig. 6; the frame *m m* is also pinned to the plate *l* at the holes *z z*, figs. 8 and 9, and all moves

up and down together. A line thus turned is equally above and below the centre; but to turn a line in any particular place, the frame *m m* is set free to turn, and the work brought up or down to the required place by the adjusting screw *c′*, which moves the sliding-piece *x*, and carries the front plate *l* with it, the chain then only holding the frame *m* from turning. To turn a segment, the pin is taken from the holes *w* and *x*, figs. 6 and 9, and the outer plate *l* is pinned to the bar *e* by the corresponding holes *y y*, the frame *m* being at liberty to turn; then the up-and-down motion of the plate *i*, by means of the chain, turns the eccentric chuck round; the length of the segments, as well as the straight lines, are always governed by the diameter in which the stud *g* revolves; as the motion of the lathe is direct and continuous, the eccentric chuck, and its wheel *s*, allow any part of the work to be brought in any position required to the turning tool; *d′*, figs. 8, 9, and 10, is an index which traverses the divisions *é é*, fig. 1, to measure the quantity above or below the centre.

In combining this straight up-and-down motion with the rose engine, the divisions do not gradate equally at each end like the geometrical projection of the rosette on a plane surface, but like a very oblique perspective representation of those divisions; this inequality, however, diminishes inversely as the connecting bar *h* and plate *i* lengthen. But if, instead of using the connecting bar *h*, the stud *g* enters direct a piece *f′*, which slides between the horizontal parallel bars *h′ h′* at the back of the plate *i* (shown only half the size in fig. 13), the patterns then taken from the rosette will be given in the geometrical projection of a perfect semicircle, because the line is always a diameter of the revolution that produced it: some of these patterns are shown in fig. 14.

XX.—ROLLING PRESS FOR BOOKBINDERS.

The SILVER VULCAN MEDAL *was this Session given to Mr.* W. BURN, *Kirby-street, Hatton-garden, for his* ROLLING PRESS *for the use of Bookbinders.*

SIR; 37, Kirby-street, Hatton-garden.

HAVING introduced an improvement in bookbinding, which I consider of great importance, I shall be much obliged if you would lay an account of the same before the Society for the Encouragement of Arts, &c. It is a method of rendering the books extremely compact and solid, by passing the sheets when folded between a pair of powerful rollers, and in some cases inserted in plates of tinned iron or other metal, which method will entirely supersede the old laborious and imperfect one of beating with the hammer, the blows of which suddenly compressing the air between the leaves, creates a heat, which is liable to make the printing set off, as it is termed, on the opposite pages. I have used it constantly for two months, and find it answer most satisfactorily. I shall be most happy to show the machine in operation, and specimens of its effects, to you or any gentlemen of the Society who may honour me by calling to inspect it.

I am, Sir,

A. Aikin, Esq. &c. &c. &c.

Secretary, &c. &c. WILLIAM BURN.

A committee met at Mr. Burn's house, for the purpose of examining the rolling press employed by him as a substitute for the beating which books require previous

to being bound. The press consists of two iron cylinders about a foot in diameter, adjustable in the usual way, by means of a screw, and put in motion by the power of one man, or of two, if more convenient, applied to one or two cranked handles. In front of the press sits a boy who gathers the sheets into packets, by placing two, three, or four upon a piece of tin plate of the same size, and covering them with another piece of tin plate, and thus proceeding by alternating tin plates and bundles of sheets till a sufficient quantity have been put together, which will depend on the stiffness and thickness of the paper. The packet is then passed between the rollers, and is received by the man who turns the winch, and who has time to lay the sheets on one side, and to hand over the tin plates by the time that the boy has prepared a second packet. Among other books that were pressed in presence of the committee was a minion bible, which was passed through the press in one minute, whereas the time necessary to beat the same would have been twenty minutes. It is not, however, merely a saving of time that is gained by the use of the rolling press, the paper is made smoother than it would have been by beating, and the compression is so much greater, that a rolled book will be reduced to about five-sixths of the thickness of the same book if beaten. A shelf, therefore, that will hold fifty books bound in the usual manner would hold nearly sixty of such if bound in Mr. Burn's manner, a circumstance of no small importance, when it is considered how large a space even a moderate library occupies, and that book-cases are an expensive article of furniture.

XXI.—COMPENSATION PENDULUM.

The Sum of FIVE POUNDS *was this Session given to Mr.* ADAM REID, *of Green End, Woolwich, for his* COMPENSATION PENDULUM; *a Model of which has been placed in the Society's Repository.*

IN the year 1818 a reward was given to Mr. Reid, for a Compensation Pendulum, in which the bob rested on a hollow cylinder of zinc, through which the rounded end *b c* of the steel pendulum rod A passed, the zinc itself being supported by the nut *e* at the end of the rod. As, therefore, the rod lengthened by heat, carrying the bob downwards, so the upward expansion of the zinc raised the bob; and if the relative lengths of the steel and zinc were so proportioned that the amount of their expansions was equal, it is evident that the compensation above described would be perfect.

But it is extremely difficult to effect this accurate proportioning of the lengths of the two metals. The length of the zinc, at first, must be such, that its rate of expansion shall be in excess, and it must be cautiously reduced by repeated trials, till the requisite accuracy is attained; this, however, is not done, except at a considerable expense of time and attention, to avoid which, Mr. Reid has introduced the following modification. He forms a hollow screw in the cross-bar *f* of the bob *g*, and an external screw of the same rake on the end of the zinc cylinder *d*; this latter is purposely made too long for due compensation, but its effective length may be commodiously and accurately reduced to what is required, by screwing it up as represented in the figure. But, after this has been done, supposing the nut *e* to have

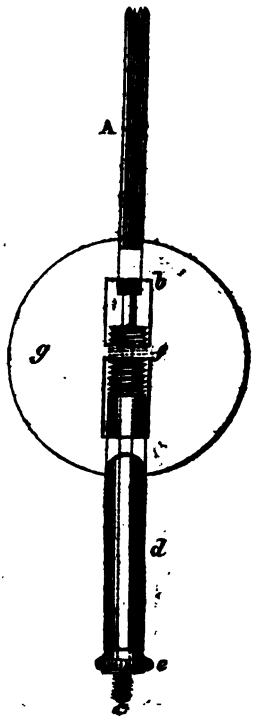

remained stationary, it is evident that the center of gravity of the pendulum itself will have been lowered by the bob descending exactly as much as the upper end of the cylinder has advanced through the hole in the cross-bar *f*; an adjustment for time is therefore required after that for compensation has been effected, which is done in the usual way, by screwing up the nut *e*. This latter compensation, however, will not be required, if the rakes of the screws *f* and *c* are proportioned to each other as the weight of the bob alone is to the sum of the weights of the bob, the zinc cylinder, and the nut. Thus, if the former weight be assumed as ten, and the latter as eleven, the screw at *f* must have ten threads in the same length that the screw at *c* has eleven threads. Care must be taken in screwing the cylinder of zinc up or down, to place the finger and thumb at the same time on the nut, so that the two may turn together; or the nut may be fastened to the cylinder.

XXII.—FACE-GUARD FOR SMELTERS.

The Sum of FIVE GUINEAS *was this Session presented to Mr.* J. CALLAGHAN, *Carlisle Lane, Lambeth, for his* FACE-GUARD FOR SMELTERS; *one of which has been placed in the Society's Repository.*

MR. CALLAGHAN'S Guard is intended to preserve the face, and particularly the eyes, of smiths, founders, stokers, and others, from being injured either by the heat of the furnace, or of red-hot or melted metal, or by fragments of metal dispersed on all sides, in the action of hammering.

The guard is of two forms, either a veil, as it were, of iron wire gauze of a curved form, and fastened by a hinge to the front part of the hat, or a mask, more or less complete, with the eye-holes covered with wire gauze.

There is not much novelty in the invention; spectacles of wire gauze are already in use, and eye-guards, fastened by a band round the head, have been employed by persons engaged in breaking stones for the roads.

It does not, however, appear that founders, stokers, and others, whose eyes are much exposed to radiant heat from burning fuel or melted metal, are in the habit of using any precaution to protect their eyes. It appears from the concurring testimony of engine-makers, master founders, and others, members of the Society, that the eyes of persons in their employ are often seriously injured from the above-mentioned causes. J. Callaghan is himself a workman, and the Society have rewarded him in hopes that his fellow-labourers may be induced to avail themselves of the invention of one of their own comrades, though they would probably neglect the very same contrivance, if offered to them from any other quarter.

CERTIFICATES.

Bridge-road, Lambeth,
January 10, 1827.

This is to certify that I have had Joseph Callaghan's face-guard tried at the forge and at the air furnace in my father's manufactory, in one instance in forging a spindle of eleven hundred weight, and in the other, in dipping metal from the air furnace; and on both occasions the men expressed their surprise at the trifling heat which they felt upon their faces; and I do not hesitate to assert, if the description of men above-mentioned would use these guards at an early stage of their profession, they would have their eye-sight wholly unimpaired for many years.

CHARLES COLLINGE.

Foundry, Blackfriars-bridge,
January 16, 1827.

SIR;

We have tried your fire-guard, and find it to answer every purpose of protecting the face and eyes from the effects generally produced by excessive: heat though simple in its construction, yet we consider it to merit the warmest approbation of

Your's, &c.

Mr. Callaghan. WARD AND AINGER.

XXIII.—TRUSS FOR RUPTURES, &c.

The SILVER VULCAN MEDAL *was this Session given to Mr.* J. PACKHAM, *of Maidstone, for his* SELF-ADJUSTING TRUSS FOR RUPTURES, AND BANDAGE FOR PROLAPSUS ANI, *specimens of which have been placed in the Society's Repository.*

THE wearers of common Rupture-trusses find, to their great inconvenience and occasional hazard, that when more than ordinary motion is given to the body, the pad will slip from its bearings, and descent of the intestine will immediately take place. The invention of connecting the pad to the bandage, by means of a ball-and-socket-joint allows of free motion in every direction, with little risk of displacement, except in cases where a considerable and partial lateral pressure occurs. If such pressure is sufficient to move the spring beyond the limits of the power of adjustment of the joint, the pad must necessarily be displaced. To obviate this risk has been the aim of Mr. Packham in the construction of his truss.

From the centre of the pad projects externally a brass stud, having a hole in its axis to receive a screw *r*, figs. 6, 7, plate VIII; the end *q* of the spring has a longitudinal slit in it through which the screw *r* passes, and thus connects the pad with the spring. If the screw were flat on the under side, it is obvious that by means of it a fixed adjustment may be obtained by fastening the pad to any part of the spring, within the limits of the slit, that may be most agreeable to the wearer. Such an adjustment has been occasionally introduced into trusses previously to Mr. Packham's invention, the peculiarity of

which consists in the following circumstances. The diameter of the screw is less than that of the slit; the head of the screw is carefully rounded on the under side, so that even when turned quite home, it makes no pressure on the spring; this latter, therefore, is at full liberty to yield to lateral pressure the whole length of the slit, as shown by the dotted lines, fig. 6, without displacing the pad. The rounded underside of the screw-head gives likewise nearly as much play as the ball-and-socket-joint, as shown in the dotted lines, fig. 7. The result of this is a truss, which, according to the annexed professional certificates, gives Mr. Packham's instrument an advantage over the others heretofore employed.

The same principle has been introduced by him with success into bandages for prolapsus ani. Fig. 8 represents a part of such bandage; *r* is the head of the screw; *s* is a metal sheath within which the end of the screw moves; *t t t* are the leather clothing. Fig. 9 is part of the same bandage in a position at right angles to fig. 8.

CERTIFICATES.

Sir; Langham-place, April 2, 1827.

You have full liberty to use my name as approving your truss. I have tried it in several cases with superior advantages to other trusses. I consider the sliding adaptation to be a perfect contrivance; and the substantial workmanship of your instrument greatly enhances its durability and its fitness for persons using much exercise.

I am, Sir,

&c. &c. &c.

Mr. John Packham. ANTHONY CARLISLE.

SIR; Maidstone, November 10, 1825.

I feel great pleasure in giving my testimony to the efficacy of Mr. John Packham's newly-improved truss, with a slit at one end of the spring, which I invariably recommend to my patients. I have made trial of the truss on my own person, and I find it is worn with comfort, and supports the protruding parts more effectually than any other truss with which I am acquainted, as the spring is so adapted to slip across the front pad by the variable attitudes of the body, and gives the front pad that equalized pressure and steadiness on the ring which secures the hernia effectually.

I am, Sir,

A. Aikin, Esq. &c. &c. &c.

Secretary, &c. &c. J. W. BATE, *Surgeon.*

SIR; Borough High-street, February 16, 1826.

I have great pleasure in offering my testimony to the usefulness and efficacy of the truss improved and made by Mr. John Packham, of Maidstone, in a case of constant prolapsus of the rectum; it completely prevented the disease, and was worn by the patient without inconvenience, and enabled him to walk with ease; and it appears to be admirably adapted for this deplorable disease, and much superior to any other I have seen proposed for this complaint.

A. Aikin, Esq. T. CALLAWAY, *Surgeon.*

Secretary, &c. &c.

XXIV.—TURRET CLOCKS.

The following Letter has been received from Mr. W. Wynn, *respecting certain improvements made by him in* Turret Clocks, *for which he has at different times been rewarded by the Society.*

Dean-street, Soho-square,
April 17, 1827.

Sir;

As I conceive that the Society of Arts will feel as much pleasure to hear of, as I have to relate, the success of the application of those improvements for which they have honoured me with their rewards, I beg to hand you a rate of going of a church clock which I have lately made and fixed in the splendid old church of Boston, Lincolnshire, in which, among many other improvements, I have introduced the escapement for which they awarded me their gold Isis medal, and twenty guineas, in 1817.

Rate of variation from

1826.—Nov. 16 to Nov. 20,	+27″,	being 4 days,	at +6″·75	per day.
20 to 26,	+35″,	being 6 days,	at +5″·83	per day.
26 to Dec. 2,	+43″½,	being 6 days,	at +7″·25	per day.
Dec. 2 to 3,	+ 7″,	being 1 day,	at +7″	per day.

During the above series I was with the clock, having other work to execute in the town, and continually had to be opening the case to show the machinery; yet, notwithstanding this frequent disturbance, the daily error of the above rate was only $7''\cdot25 - 5''\cdot83 = 1''\cdot42$, or less than a second and a half per day. The pendulum has since been altered, to correct the gaining, and the following has since been the rate of the clock.

Rate of variation from

1827.—Jan. 30	to Feb. 3,	− 1″,	being 4 days,	at	−0″·25	per day.
Feb. 3	to 22,	−13″,	being 19 days,	at	−0″·684	per day.
22	to Mar. 5,	+ 2″,	being 11 days,	at	+0″·18	per day.
Mar. 5	to 22,	+ 1″,	being 17 days,	at	+0″·06	per day.

In this last series of fifty-one days, the daily error has, therefore, been 0″·684 + 0″·18 = 0″·864, or very little more than three quarters of a second.

The accuracy of this rate has prevented the necessity of altering the time of the clock since it was first put going from regulation, and will do so for a long time to come, which is an object of much importance; for an alteration in a public clock, although it be made to correct it, is liable to mislead those persons who are guided by it.

So much is the friction taken off in this piece of work, that the watch part, which goes eight days, whose great wheel is fifteen inches diameter, is keeping up a motion of a two seconds' pendulum, weighing 132 lbs. with a maintaining power of 15 lbs. 9 oz. which is not more than a tenth of the weight usually employed in clocks of these dimensions. And I wish to add, that it does not only keep it going, but that it goes well; for the length of the chord of the arc of vibration is twenty-four inches, while that of the angle of escapement is only 9·6 inches. This reduction of the weight of the maintaining power has not only tended to produce the accuracy of rate, but it will be the means of greatly prolonging the duration of the watch part.

I am also much gratified to state that the hammers for which the Society honoured me with another reward of twenty guineas in 1822, most fully answer my expectations. I have attached a set of them to the clock in question, the powers of which are so ample, that they produce sounds from the bells sufficiently loud to be heard in every house in the large town of Boston, which

contains twelve thousand inhabitants, an object which was never accomplished before by an eight-day clock. I have also, by the application of my toothed sectors, as described in your 40th volume, and by executing the trains on genuine geometrical principles, been able to lift these hammers with weights from fifty to seventy per cent lighter than is applied to several specimens of work executed by my contemporaries, as compared with the momenta of the hammers and of the weights severally applied—an object of great importance, as it is generally acknowledged, that to be enabled to lift the hammers of an eight-day clock sufficiently heavy to bring out the tones of the large bells of a church, it would be necessary to employ such heavy weights as to risk the crushing of the machinery in a few years.

I beg to say that the above is a statement of facts which may be most unequivocally authenticated.

I am, Sir,

A. Aikin, Esq. &c. &c. &c.

Secretary, &c. &c. W. Wynn.

MANUFACTURES.

I. II. III.—BRITISH LEGHORN.

The Sum of £.21 was this Session presented to Messrs. J. *and* A. MUIR, *of Greenock, for their* HATS OF BRITISH LEGHORN; *and the Sums of £.10 10s. and £.5 5s. have respectively been presented to Messrs.* MUIR, *and Mr.* JOSEPH LONG, *of Claydon, Suffolk, for* FINE PLAT. *The quantity made by the former amounts to about* 1,880 *score, and by the latter to* 804 *score.*

SIR; Greenock, February 10, 1827.

WE have by coach forwarded for the competition a paper parcel containing fifty score rye plait, in imitation of Italian. We also, on the 4th, forwarded to Mr. Jones, of the house of Ingleby, Jones, and Co. one box containing ten dozen ladies' hats made from the same material: we have requested that he provide you with the whole or what part you wish. We hope both packages will be in time, so that we may be enrolled as competitors. We have not, since our former communication, made any alteration either as to material or mode of bleaching. We do not think a better material can be procured than rye for the purpose. It grows in much finer and longer joints than wheat, and with it we produce finer hats than come from Italy. Last Spring we had forty bolls rye sown for straw, which was put in five or six Scotch acres. Our agent finds from experience, that the ground requires to be

rich. He has made for us in the course of the last year two thousand ladies' hats, besides several thousand scores of plait that was forwarded to us to be made up into hats here or sold in the plait.

We are, Sir,

A. Aikin, Esq. &c. &c. &c.

Secretary, &c. &c. JAMES & ANDREW MUIR.

SIR; Greenock, February 12, 1827.

We have this day received yours of the 9th. We had written to Messrs. Ingleby, Jones, and Co. on the 26th August last, with an order to receive from you our medal and hats, which we thought were since in their possession: you will now please deliver the same to them.

In the course of the past year we have corresponded with Sir John Sinclair, Sir James Riddell, and several others on the subject of the manufacture of hats in imitation of Leghorn. Sir James Riddell has engaged a man in our employment, for the purpose of attempting the manufacture on his estate.

Owing to the great depression in business, Leghorn hats have been sold so much lower than formerly, that though our workers are only earning two shillings to two shillings and sixpence a week, we find difficulty in producing goods to leave us a profit; a knowledge of this, we suppose, has been the means of preventing those houses in England who are in the habit of dealing in straw plait and hats embarking in that manufacture. That plait and hats can be produced in this country equal in quality to the foreign, is now, we think, beyond a doubt. When Messrs. Ingleby, Jones, and Co. have advised us of the house they have fixed on to sell our manufacture, we intend this Spring to forward to London all

the finest hats, as we receive them from Orkney. In the course of eight days, we intend forwarding more hats and plait to London, which, in point of clean work, will be generally superior to those hitherto sent.

We are, Sir,

A. Aikin, Esq. &c. &c. &c.

Secretary, &c. &c. JAMES & ANDREW MUIR.

6, Wood-street, Cheapside, London,

SIR; February 23, 1827.

AT the request of Messrs. James and Andrew Muir, of Greenock, we hand you four British Leghorn hats, which you will be pleased to submit to the Society of Arts. These hats are made in the Orkneys, from rye-straw, prepared in the manner they formerly described, and appear of excellent quality.

We are, Sir,

A. Aikin, Esq. &c. &c. &c.

Secretary, &c. &c. INGLEBY, JONES, & Co.

SIR; Greenock, March 17, 1827.

WE received your favour of the 13th instant, advising the Society's having voted to us their Large Silver Medal or Twenty Guineas, at our option (being the premium offered), for our Hats of Rye Straw, in imitation of Leghorn.

It has given us pleasure to learn from your's, that our plait is tighter and more compact made than that in Italy. Our Orkney plaiters, when at split straw, always made better work than that in Bedfordshire, and naturally followed the same method in rye plait; the Italians, however, by slighting their work, are able to bring it much

cheaper to market. So very low are Italian hats just now, that, notwithstanding the duty, we have difficulty in making a saving business in our manufacture. This is the grand reason why there is not a greater competition. If government were to double the present duty on Italian plait and hats, we have no doubt but by so doing much employment would be given to our female population, and many acres of poor land would be put into cultivation.

With respect to knitting, our plait, owing to its compactness, could not be made up in the same time as Italian. For example, take what is called a forty-row Italian hat, and a forty-row hat of ours, count the loops with an inch glass in each, ours will count twenty-two loops, while the Italian will count only nineteen loops, thus making a difference of fifteen per cent, which operates both as it respects plaiting and knitting, but ours will be a finer-looking hat, with the same number of rows. Our knitters were taught to take up one loop at a time, and continue that practice, yet our plait admits of the knitters taking up three or more loops, without injuring the appearance of the plait.

We are, Sir,

A. Aikin, Esq. &c. &c. &c.

Secretary, &c. &c. JAMES & ANDREW MUIR.

P. S.—We might have said, our hats, with the same number of turnings to the inch, can be made up as soon as the Italian. We intend to forward to the Society a gentleman's silk shag hat, weighing only six ounces, the whole of rye-straw, knit and plait as the Italian hats, an invention of ours that are much approved of by gentlemen who wear them; also a piece of plait, the finest we have ever made, it would make a hat equal to eighty rows, or ten to eleven rows in the inch. We have sent to differ-

ent houses in London this Spring, eight hundred and eighty score rye-plait, and we have about one thousand score to forward.

As connected with the subject of plait, it may be mentioned, that the Society have received from J. White, Esq. of Westbourne Green, some interesting samples of mats of stained grass, platted very ingeniously in various patterns, made at Mombass, on the Coast of Africa.

They have also received specimens of bark cloth from the Sandwich Islands, presented by Joseph Hume, Esq. M.P. V.P., and by Thomas Winkworth, Esq. Chairman of the Committee of Manufactures.

IV.—OPENING HORN.

The Silver Vulcan Medal and Five Guineas *were this Session presented to Mr.* J. James, *James Street, Lambeth, for his* Machine for Opening Horn; *a Model of which has been placed in the Society's Repository.*

Horn is prepared for the use of the Lanthorn-maker, the Comb-maker, the Cutler, &c. by making it into flat laminæ of various thicknesses, according to the use for which it is intended. The horns are first cut transversely into pieces, according to the use to which each is applicable. The pieces are then slit longitudinally, and are held separately over a naked fire, till heated to the degree

at which horn becomes soft; they are then hammered flat by a mallet, and placed in a strong press till they become cold.

Mr. James, who is himself a worker in horn, objects to softening it over a naked fire, in consequence of its frequently being scorched or frizzled, more especially as in opening the old hard horns, it is necessary to allow the flame to enter the hollow, that the inside may be rendered equally soft as the outside.

The apparatus employed by Mr. James is a block of cast iron, with a conical hole quite through it, and a plug of the same metal, about one eighth of an inch less in diameter than the hole. The block and plug are both to be heated in a common fire, or in a stove, to about the temperature of melting lead; the block is then taken out, and placed on a firm support; a piece of horn previously slit is put into the hole, and the heated plug is dropped within the horn. This latter being heated, both from within and from without, soon becomes soft; the plug is then carefully and gradually driven in by a mallet, and by its pressure soon redresses any original crookedness of the horn. After being left for about a minute in this state, the plug is to be driven out by turning the block on one side, and the horn being then withdrawn will be found quite soft enough to be opened and pressed in the usual manner. Considerable saving of time is thus obtained, and all risk of overheating the horn is avoided.

COLONIES AND TRADE.

WINE FROM THE CAPE OF GOOD HOPE.

The LARGE GOLD MEDAL *was this Session voted to* FRANCIS COLLISON, *Esq. of the Cape of Good Hope, for* WINE *of superior quality, the growth of that Colony.*

HALF a pipe of Cape wine, in the wood, was sent by Mr. Collison for the Society's examination. The candidate states in his letter, dated June 26, 1826, that the wine has been made from the pure juice of grapes, the growth of the colony of the Cape of Good Hope, without any kind of flavouring having been added to it. Above three hundred pipes of the same quality have been sent by him for sale to the London market.

The wine was examined at the Committee by dealers in that commodity, and by other competent judges, and was considered by them to be far superior to the Cape wines in general. It is free from the unpleasant earthy flavour by which such wines are usually characterized, and was considered to bear a near resemblance to that made at Teneriffe.

PRESENTS

RECEIVED BY THE SOCIETY FROM NOVEMBER 1, 1826, TO JUNE, 1827, INCLUSIVE.

ROBERT AIKIN.—Recipes of great improvement in the mode of curing all kinds of Meat, Fish, and Butter. 8vo.

WILLIAM ALLSUP.—A Specimen of Writing Engraving.

AMERICAN PHILOSOPHICAL SOCIETY HELD AT PHILADELPHIA.—The Transactions of the Society. 4to. Vol. 3, part i.

ANTIQUARIAN SOCIETY.—Archaeologia; or, Miscellaneous Tracts relating to Antiquity. Vol. 20, part ii, and Vol. 21, part i. 4to.

ASIATIC SOCIETY INSTITUTED IN BENGAL.—Asiatic Researches. Vol. 15. 4to.

ASTRONOMICAL SOCIETY OF LONDON.—Memoirs of the Society. Vol. 2, part ii. 4to.

POWELL CHARLES BLACKETT.—An Essay on the Use of the Atropa Belladonna, or Solanum Lethale, and the Solanum Portense, &c. 8vo.

WILLIAM BROCKEDON.—The Passes of the Alps. Nos. 1 and 2. 4to.

R. BURNET.—A Word to the Members of the Mechanics' Institutes. 8vo.

WILLIAM REID CLANNY, M. D., F. R. S. E.—A Lecture upon the Zopuron. 8vo.

BARON CLOSEN.—The Transactions of the Polytechnic Society of Bavaria from 1815 to 1826. 4to.

The Transactions of the Agricultural Society of Bavaria, from 1810 to 1820. 8vo.

Ditto, from 1821 to 1826. 8vo.

A Treatise on the Management of Bees.

Prize Essay on the Best and Most Equitable Means of Concentrating Dispersed Estates in Bavaria. By D. Gebhard.

A Treatise on the Cultivation of Silk in Bavaria. By H. Van Nagel.

A Treatise on the Cultivation of Hops in Bavaria. By J. E. Van Reider.

Prize Essay by Counsellor Von Hazzi, on the best means of Concentrating Dispersed Estates in Bavaria.

Prize Essay on Scarcity and High Prices.

A short Treatise on Grafting. By L. Goss.

A Treatise on Freeing Landed Estates from Manorial Services. By D. Gebhard.

(The whole of the above are in German.)

MONSIEUR COINDET.—Lettres sur la Suisse, accompagnées de Vues dessinées d'après Nature et Lithographiées, par Villeneuve, &c. Folio.

LAYTON COOKE.—Practical Observations on the Importation of Foreign Corn. 8vo.

M. FARADAY, F. R. S., F. G. S.—A Paper on the Existence of a Limit to Vaporization, printed in the Philosophical Transactions.

Chemical Manipulation; being Instructions to Students in Chemistry, on the methods of performing experiments of demonstration or of research, with accuracy and success. 8vo.

DR. FITTON.—Instructions for Collecting Geological Specimens. 8vo.

An Account of some Geological Specimens from the Coasts of Australia. 8vo.

JOHN FROST.—An Oration delivered before the Medico-Botanical Society of London, at the commencement of their Sixth Session, Friday, October 14, 1825. 4to.

Another, delivered at the Commencement of their Seventh Session, Friday, October 13, 1826. 4to.

T. GILL.—The Technical Repository, in continuation. 8vo.

P. GREEN.—Mr. Huskisson's Letter on the Corn Laws.

MR. * * * * * * (a Member).—Sessions Papers for 1821, 1822, and 1823.

Five Reports of the Select Committee on East India Affairs, with a Glossary, 1808 to 1812.

Proceedings of the Court of Common Council for 1821 and 1822 complete, and for 1823, wanting Nos. 12, 13, and 14.

Report of Committee for General Purposes respecting the Disturbances at Knightsbridge, August 26, 1821.

London Bridge Proceedings, and Evidence relative to the same, from 1799 to 1819.

Reports, &c. 1820 and 1821.

Report from the Bridge Committee, February and May, 1823.

Bill for rebuilding London Bridge, 1823.

Seventeen Reports, with Index, of the Commissioners of Woods and Forests, January 1787 to March 1793.

House of Commons Standing Orders and Table of Fees, 1685 and 1819.

Table of Fees, 1813.

Report made to the Secretary of State for the Home Department on Tread Wheels, 1823.

Report of the Select Committee on the state of Gaols, July 12, 1819.

Report on the King's Bench, Fleet, and Marshalsea Prisons, May, 1825.

Report on Printing and Stationery, July 30, 1822.

Minutes of Evidence on the Gas Light and Coke Company, May 17, 1809.

Report of Physicians on the Penitentiary at Millbank, April 5, 1823.

Rev. G. A. Hatch.—Specimens of Timber from Van Dieman's Land.

Captain Henniker.—A Description of a Vessel with a Sliding Keel.

Sir William Hillary, Bart.—A Pamphlet entitled The National Importance of a Great Central Harbour for the Irish Sea, &c. 8vo.

L. Horner.—Elements of Arithmetic, Algebra, and Geometry, for the use of the Students in the Edinburgh School of Arts. By George Lees, A. M. 8vo.

A Manual of Chemistry, chiefly for the use of Pupils of Mechanics' Institutions. By Andrew Fyfe, M. D., F. R. S. E. &c.

The Horticultural Society.—The Transactions of the Horticultural Society. Parts 4, 5, 6, vol. vi, and part 1, vol vii. 4to.

The Report of the Garden Committee. 4to.

The List of Members. 4to. In continuation.

Joseph Hume, M. P. V. P.—Returns of the Revenue, the Expenditure, and the Rules and Regulations of the Trustees of Light-houses on the River Clyde and the Harbour of the Broomielaw, Glasgow. Folio.

Samples of Cloth from the Sandwich Islands.

J. Jenour, Jun.—An Essay on Spiral Cartridges. 8vo.

J. Jopling.—Designs for Agricultural Buildings, &c. By the late Charles Waistell, Esq. 4to.

Miss Kendrick.—A Miniature, framed and glazed.

George Lange.—A Prize Dissertation in German on the Age of Homer, his Writings, &c. 8vo.

Robert Laurence.—Memoir prepared at the request of

a Committee of the Common Council of the City of New York, and presented to the Mayor of the City at the celebration of the completion of the New York Canals. By Cadwallader D. Colden. 4to.

DR. LEE.—A Treatise on Astronomy, Theoretical and Practical. By Robert Woodhouse, A. M. F. R. S. 3 Vols. 8vo.

LINNÆAN SOCIETY.—The First Part, Vol. XV. of the Transactions of the Society, with the List of Members. 4to.

R. MACHAN.—A New System of Astronomical Mnemonics: forming a new and truly original method of acquiring a complete knowledge of the Constellations. 8vo.

CAPTAIN GEORGE WILLIAM MANBY.—A Practical Illustrative Essay on the Prevention of Shipwreck, and the Preservation of Shipwrecked Mariners. 8vo.

MR. MATHIAS.—Il Cavaliero della Croce Rossa, o la leggenda della santita poema in dodici canti dall' Inglese di Edmundo Spenser, &c. 8vo.
Poesie Liriche e varie. 3 Vols. 8vo.

A MEMBER.—Plans and Elevation of the intended Athenæum.

CESAR MOREAU.—Chronological Records of the British Royal and Commercial Navy, from the earliest period (A. D. 827) to the present time (1827), founded on official documents.

W. NEWTON.—The London Journal of Arts and Sciences, in continuation. 8vo.

JACOB PERKINS.—A Pamphlet, on the Cause of Explosion in Steam-boilers.

S. RIGAUD.—Principles of Electricity, containing divers new Theorems and Experiments, together with an Analysis of the superior advantages of

high and pointed conductors. By Charles Viscount Mahon, F. R. S. 4to.

W. C. Ross.—A Lithographic Print, representing our Saviour Dispossessing the Demoniacs.

Royal Asiatic Society of Great Britain and Ireland.—Regulations of the Royal Asiatic Society of Great Britain, and a List of the Members. 4to.

Royal Economical Society at Dresden.—The Transactions of the Society for 1826. 12mo.

Royal Institution.—A Journal of Science and the Arts, Nos. 42, 43, and 44, with the Index to the First Twenty Volumes. 8vo.

Royal Society of Edinburgh.—The Transactions of the Royal Society of Edinburgh. 4to.

Royal Society of London.—Parts I. II. III. and IV. of the Philosophical Transactions of the Royal Society of London. 1826.

Ruffy and Evans.—The Farmer's Journal, from the commencement.

Russell Institution.—A Catalogue of the Library of the Russell Institution. 8vo.

William Salisbury.—A Pamphlet on the General Improvement of the Rural Arts. 8vo.

William Seymour.—Tarif des Douanes de France. 4to.

H. C. Shenton.—Three Frames, containing various Proof Impressions of Engravings by the late Charles Warren, Esq.

B. Silliman.—The American Journal of Science and Art. Vol. 12.

R. H. Solly.—Various Drawings and Engravings of Bridges.

A Pamphlet, entitled, The Collective Wisdom; or, Sights and Sketches in the Chapel of St. Stephen, &c. 8vo.

A Map of Paris.

A Plan of Edinburgh.

A Collection of Chrysanthemums, with their Names affixed, from the Garden of the Horticultural Society.

A Pamphlet, entitled, The Universal Directory, for taking Alive and Destroying Rats, &c. By Robert Smith. 8vo.

A Pamphlet on the Fire-damp of Coal Mines. By Sir Humphrey Davy, LL. D. F. R. S., &c. 8vo.

ANDREW STEELE.—The Natural and Agricultural History of Peat-Moss, or Turf-Bog, &c. 8vo.

SAMUEL STAPLES.—A Lithographic Drawing of Wanstead House.

MR. STAUNTON.—Returns relative to the Prices of Corn and Flour, transmitted by his Majesty's Consul in America in 1824–5.

Returns of all Accounts relative to Foreign Corn, No. I. Papers 1, 2, 3, 4. Ditto, No. II., 1, 2, 3, 4. Ditto, No. III., 1, 2, 3, 4.

Paper relative to Regulations in Foreign Countries, in respect to the Export and Import of Grain.

Report from the Committee of the House of Lords respecting Foreign Grain.

Report from the Commissioners on Promissory Notes in Scotland and Ireland.

An Account of the number of Persons committed for trial in each county of England and Wales in the years 1810, 1811, and 1812, and 1824, 1825, and 1826. Ditto Convicted in the several Counties of Scotland, for seven years ending 1821. Ditto in England and Wales for seventeen years ending 1826.

First Report from the Select Committee for Improving the Foreign Trade of the Country.

Report from the Select Committee to consider the validity of the Doctrine of Contagion of the Plague.

First and Second Reports from the Select Committee on the offices of Clerk of Parliament and Black Rod.

Papers on the Slave Population of His Majesty's possessions in the West Indies and South America.

Papers relating to the Burmese War.

Treaties with the Native Powers in India.

Correspondence with the Commissioners at Sierra Leone, the Havannah, Rio de Janeiro, and Surinam, relating to the Slave Trade, class A.

Correspondence with Foreign Powers, relating to the Slave Trade, class B.

Vaccine Establishment Report.

Minutes of Evidence on the Equitable Loan.

Return of the Number of Convictions in each County of Ireland, for seven years ending 1826.

Communication from Sir Charles Brisbane, Governor of St. Vincent's to the House of Assembly, on the Slave Population.

The Rural Code of Hayti, in French and English.

W. Thorold.—A Pamphlet, entitled, An Inquiry into the means of making Norwich a Port.

William Tooke, V. P.—Library of Useful Knowledge, Nos. 1 and 2. 8vo.

C. C. Western, M. P.—A few Practical Remarks on the Improvement of Grass-land, &c.

Engravings of Antique Candelabras, &c.

John White.—A sample of Matting, from the Coast of Africa.

T. Winkworth.—Samples of Cloth from the Sandwich Islands.

Richard Williamson.—A View of Athens.

T. Woodfall.—A Printed Index to the Minutes of Evidence on the Oil Gas Bill in 1824. Folio.

W. H. Wyatt.—The Repertory of Patent Inventions. Vol. iii. 8vo. With Supplement.

A

CATALOGUE

OF THE

MODELS, MACHINES,

&c. &c.

RECEIVED SINCE THE PUBLICATION OF THE FORTY-FOURTH VOLUME OF TRANSACTIONS.

IN AGRICULTURE.—Class I.

Mr. W. Thorold's Machine for Slicing Turnips. *See page* 47.

IN CHEMISTRY AND MINERALOGY.—Class II.

Mr. George Field's Colourless Lac-Varnish. *See page* 59.

Mr. Henry Luning's Colourless Lac-Varnish. *See page* 59.

Captain Bagnold's Lime-Juice. *See page* 72.

IN MECHANICS.—Class III.

Mr. W. Thorold's improved Reel for Captain Manby's Apparatus. *See page* 75.

Don Jaime Isern's Instrument to enable the Blind to Write Music. *See page* 86.

Mr. G. Gibson's Types for the Use of the Blind. *See page* 90.

W. J. Hood, Esq. (Lieut. R. N.), his Ice-Saw. *See page* 96.

Mr. J. Hookey's improved Log-ship. *See page* 99.

Mr. J. WEEKES's mode of Securing the Dead-eyes of a Ship. *See page* 103.

W. CAFFIN, Esq., his Instrument for Measuring Grain, &c. *See page* 106.

Mr. J. B. KOOYSTRA's Stopper for a Chain-cable. *See page* 109.

W. J. CHARLTON, Esq., his Closet for Official Papers. *See page* 111.

R. COWEN, Esq., his Draining Syphon. *See page* 113.

Mr. G. MACHIN's Expanding Key for a Lock. *See page* 123.

Mr. G. SMART's Trussed Girder of Wrought Iron. *See page* 125.

Mr. J. THURRELL's Mangle. *See page* 127.

Mr. W. H. PERKINS's Cap for a Malt-kiln. *See page* 129.

Mr. J. BOTHWAY, R. N. his improved Cat-block. *See page* 131.

J. HAWKS, Esq., his Revolving Light for Steam-boats. *See page* 136.

Mr. J. PAINE's Illuminated Public Clock. *See page* 139.

Mr. J. BOWER's improved Lathe Chuck. *See page* 143.

Mr. A. REID's Compensation Pendulum. *See page* 150.

Mr. J. CALLAGHAN's Face-guard for Smelters. *See page* 152.

Mr. J. PACKHAM's Self-adjusting Truss for Ruptures, and Bandage for Prolapsus Ani. *See page* 154.

IN MANUFACTURES.—CLASS IV.

Messrs. MUIR's Specimen of British Leghorn. *See page* 159.

Mr. LONG's Specimen of British Leghorn. *See page* 159.

Mr. J. JAMES's Apparatus for Opening Horn. *See page* 164.

Mr. Wm. Thorold's Reel for throwing a line from the Shore to a Ship in distress.

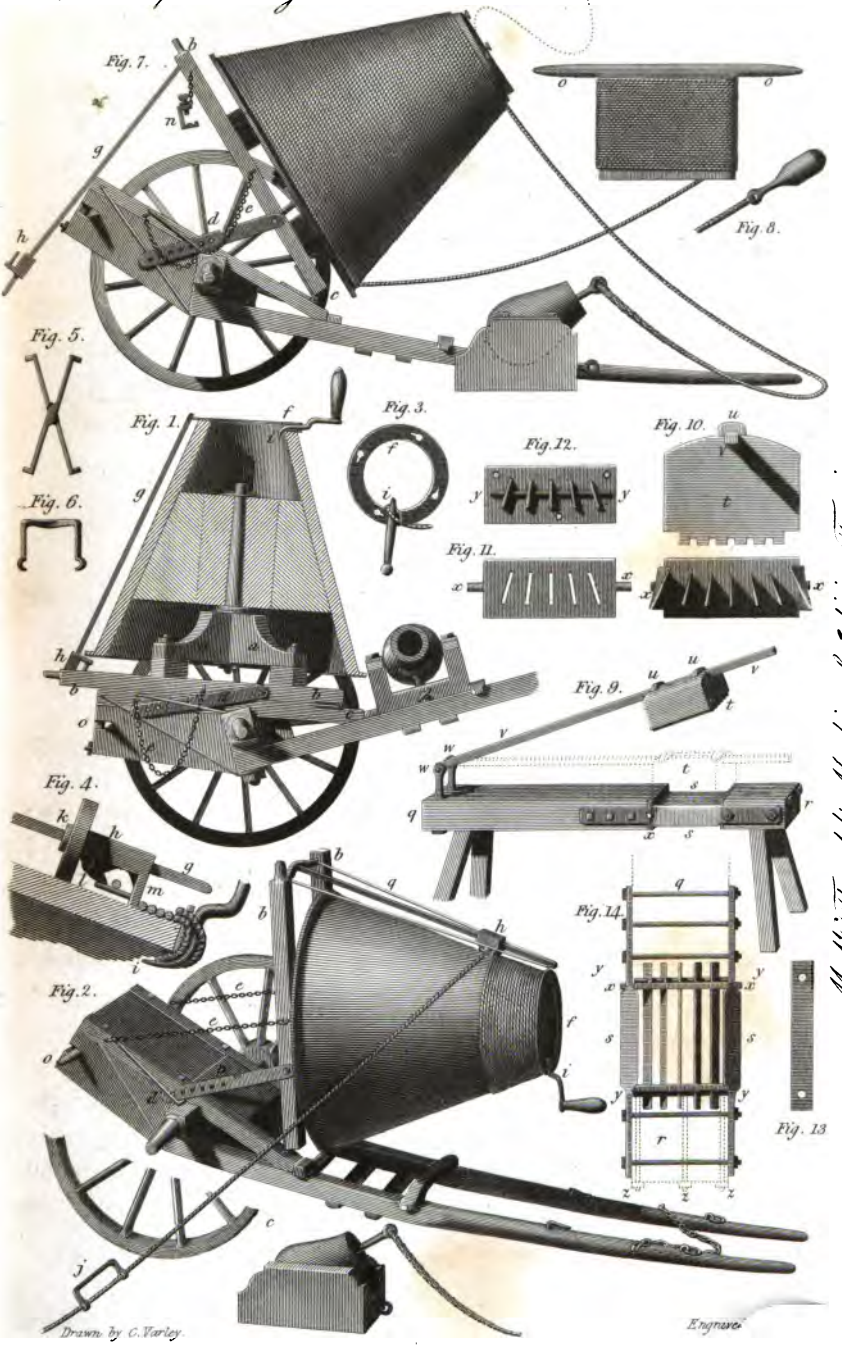

Mr Jonas Thurrell's Mangle.

Fig. 1.

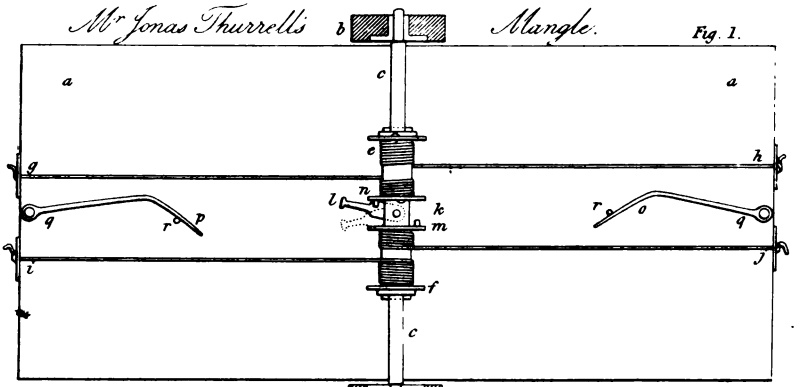

Mr Peter Green's Lamb Carriage.

Fig. 6.

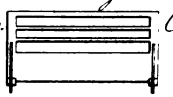

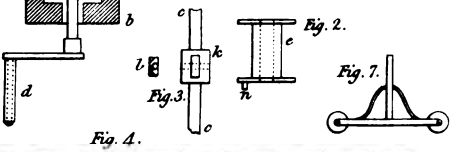

Fig. 2.

Fig. 3.

Fig. 7.

Fig. 4.

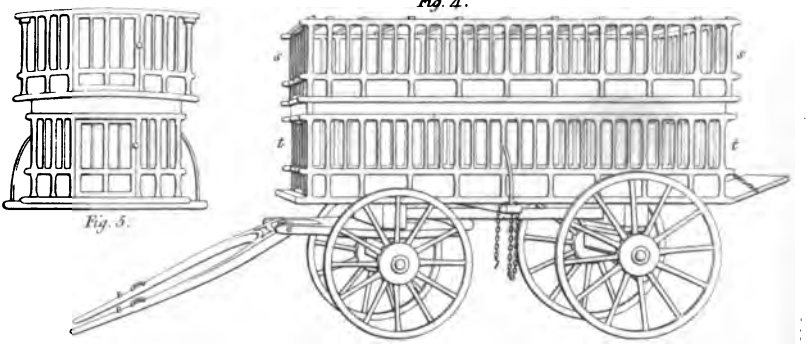

Fig. 5.

Mr W. H. Perkins's Cap for a Malt Kiln.

Fig. 8.

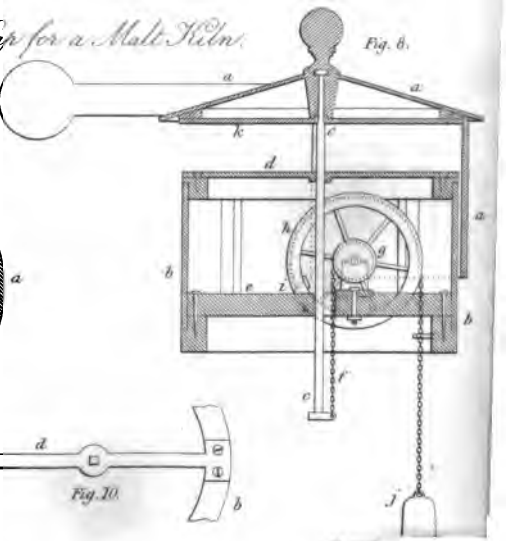

Fig. 9.

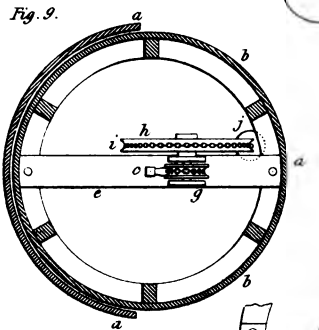

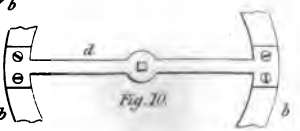

Fig. 10.

Drawn by C. Varley.

Engraved

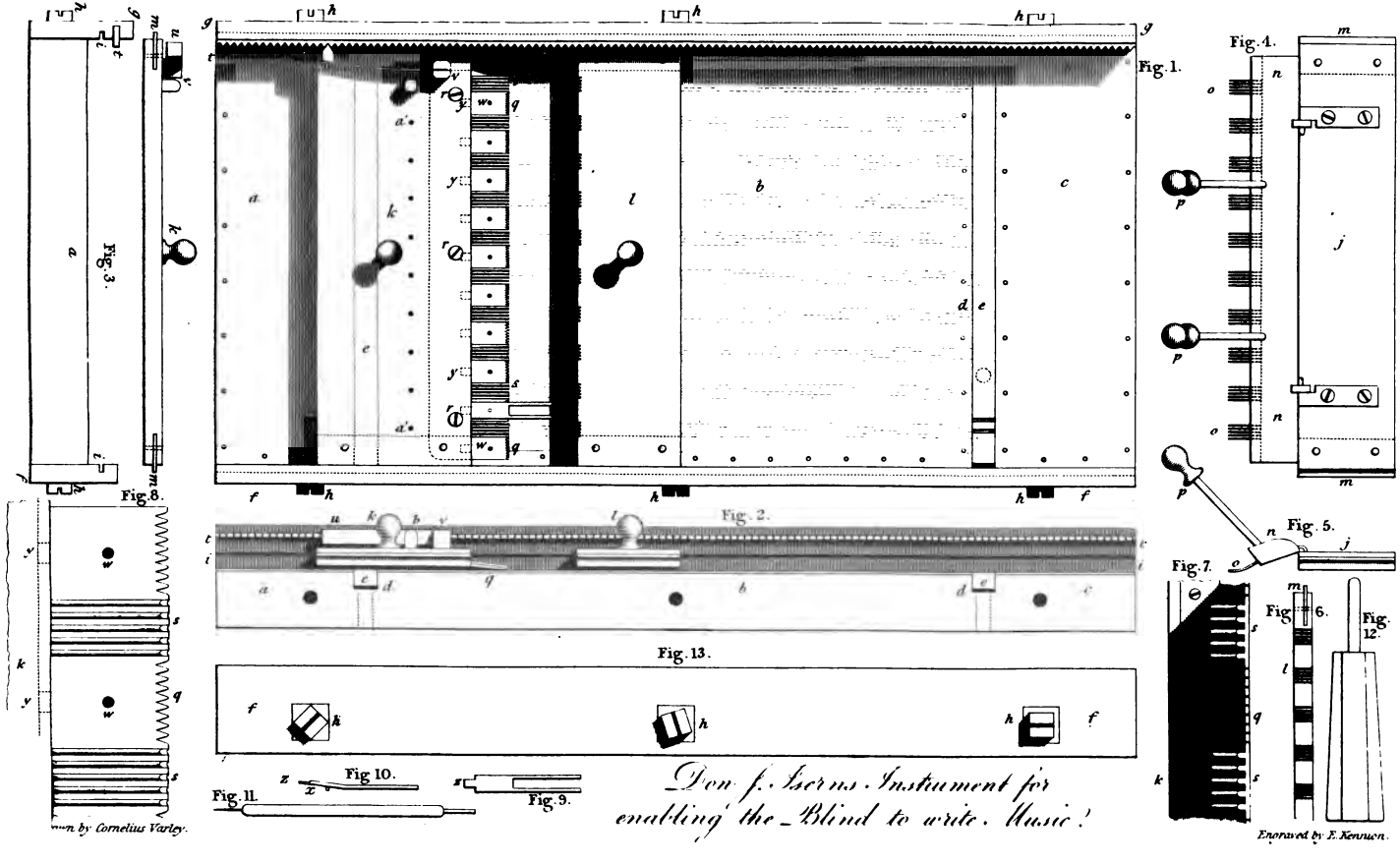

Don J. Iserns Instrument for enabling the Blind to write Music!

...wn by Cornelius Varley.
Engraved by E. Kennion.

Mr. G. Gibson's Apparatus to enable the Blind to Write & Read.

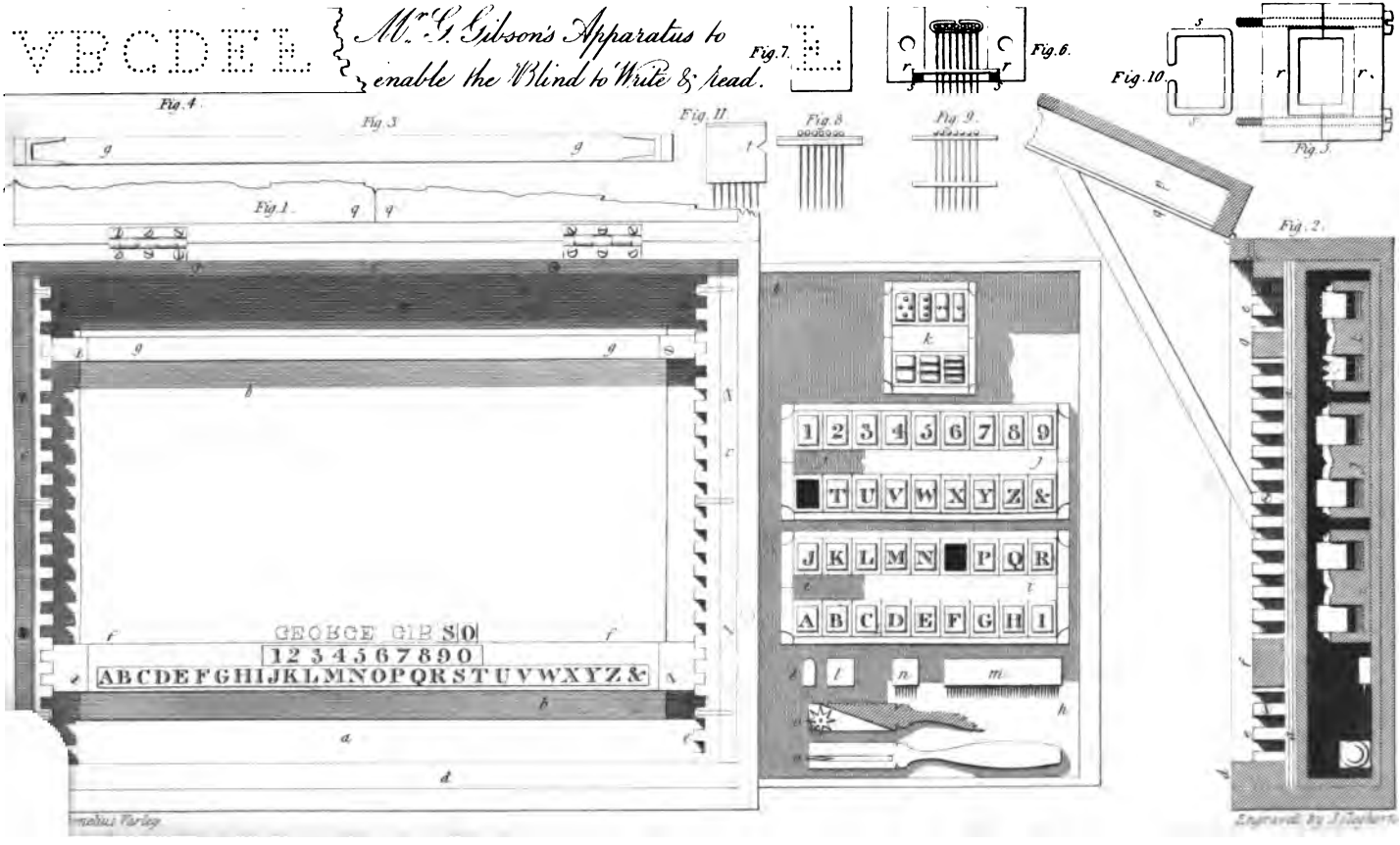

Lieut. W. J. Hood's Ice-saw.

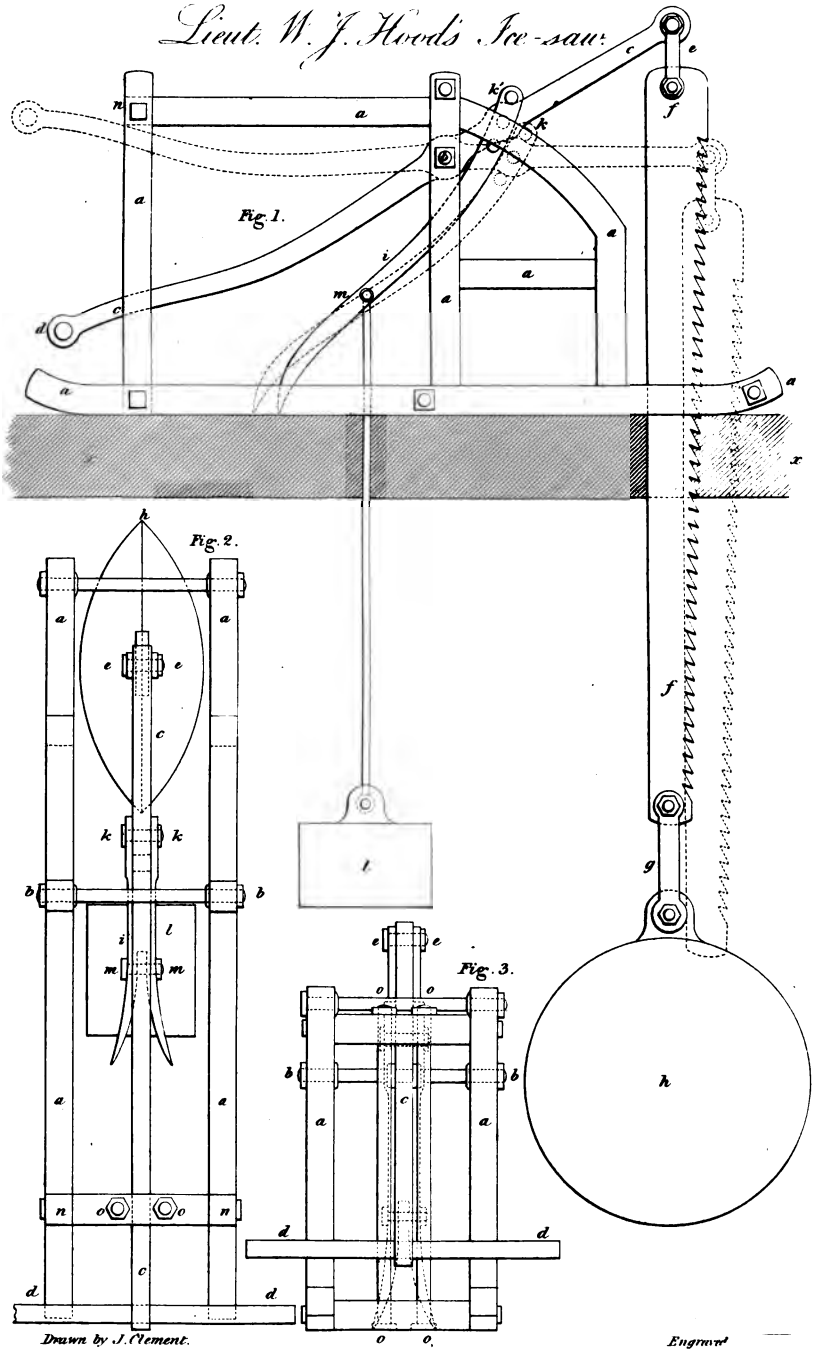

Mr. Bothway's Cat Block.

Mr. Weeks mode of securing dead eyes.

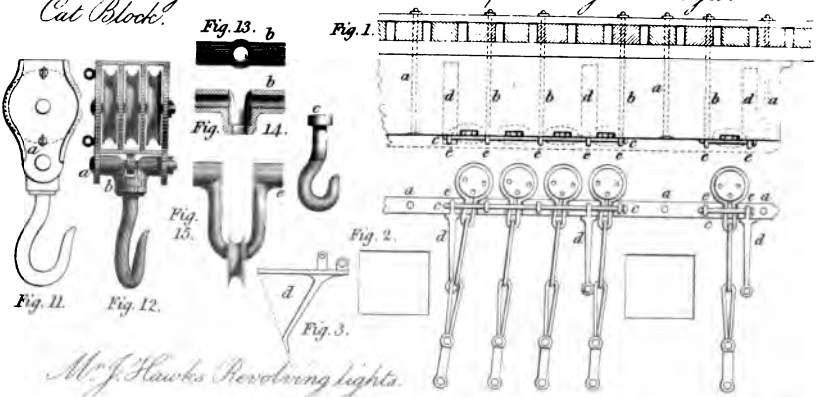

Mr. J. Hawks Revolving lights.

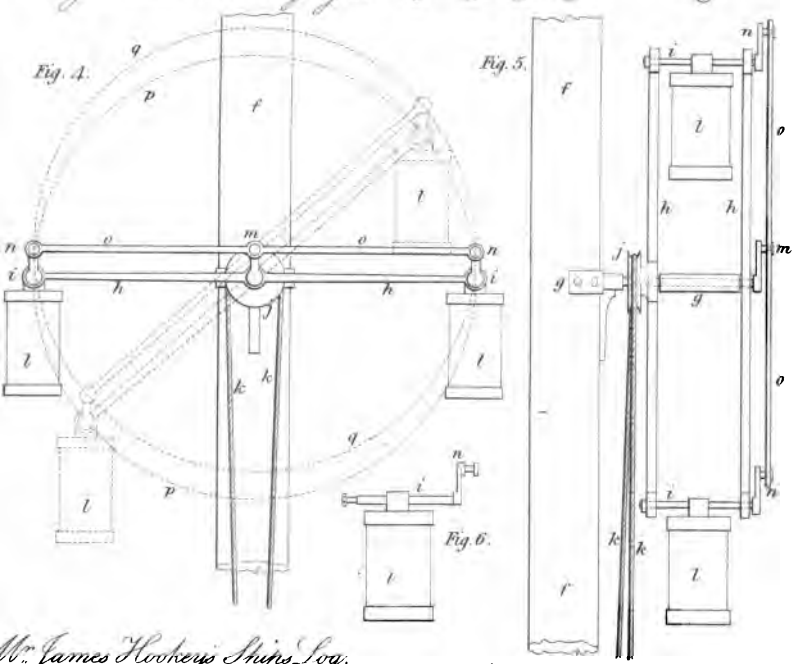

Mr. James Hookey's Ships Log.

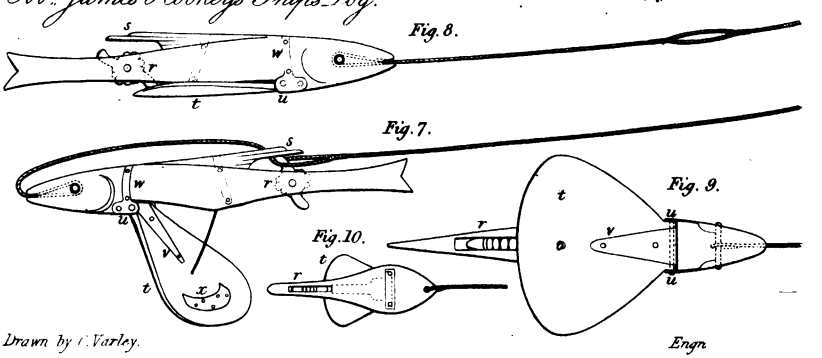

Drawn by C. Varley.

Engr.

Mr. Machin's Lock.

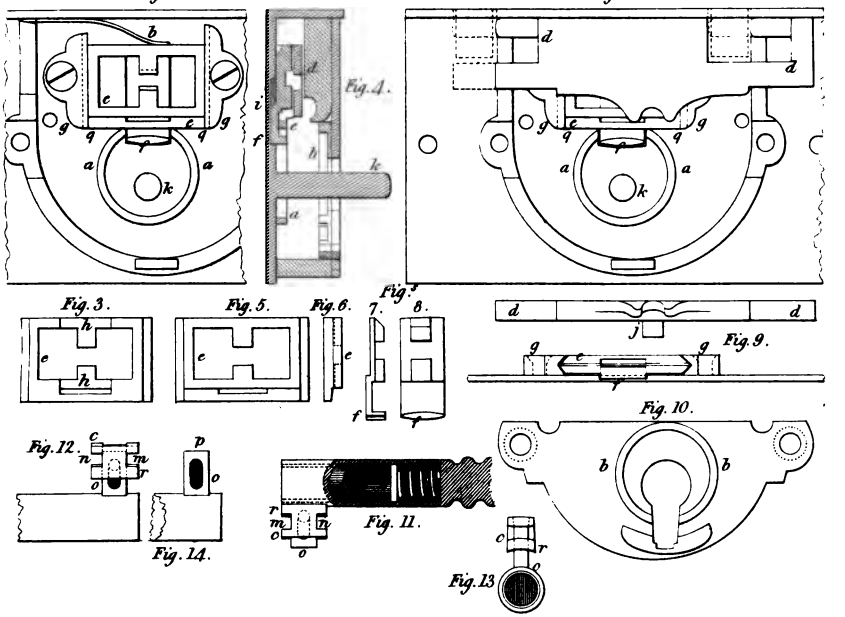

Mr. Smart's wrought-iron Beam.

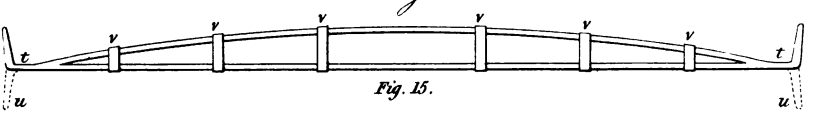

Mr. Caffin's Instrument for filling Cartridges.

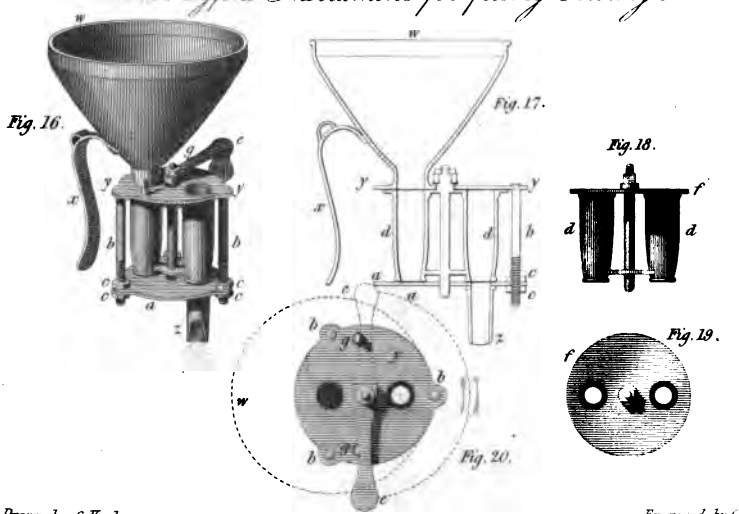

Drawn by C Varley.

Engraved by C

Mr. J. P. Paine's Self-illuminating Public Clock.

Fig. 1.

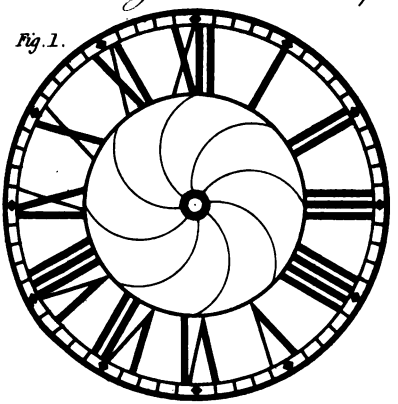

Fig. 3.

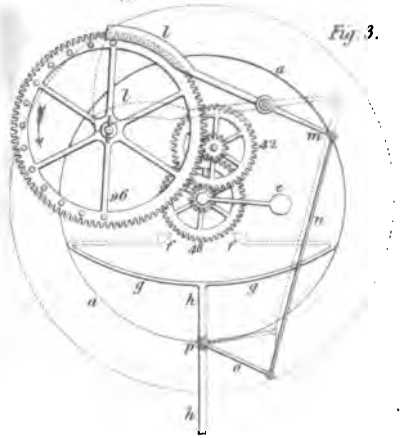

Fig. 4.

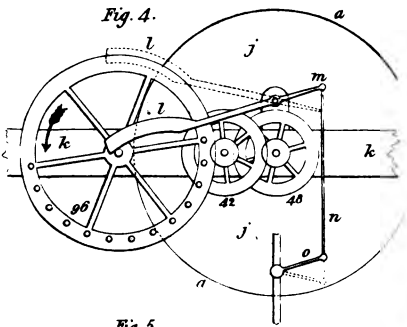

Fig. 5.

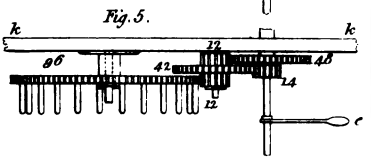

Fig. 2.

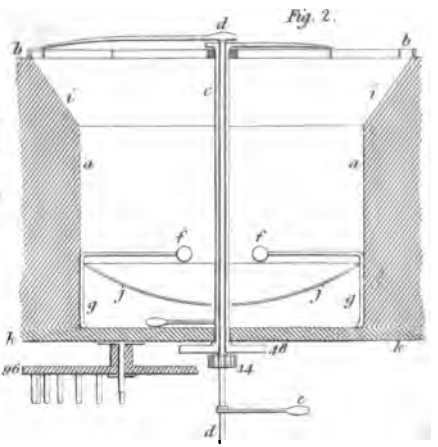

Mr. J. Packham's Self-adjusting Truss & bandage.

Fig. 8.

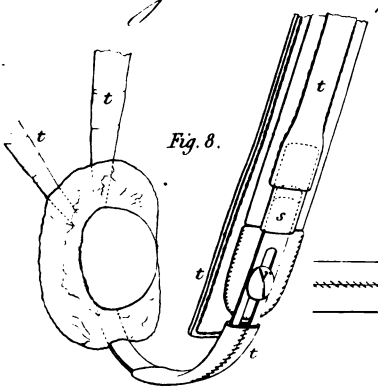

Fig. 9.

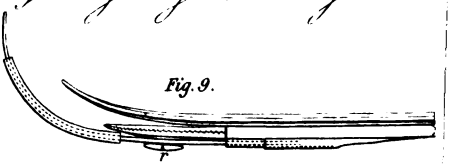

Fig. 6.

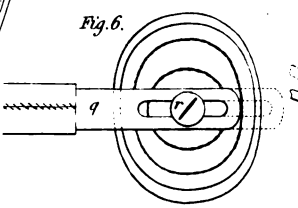

Fig. 7.

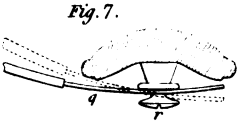

Drawn by C. Varley.

Engraved by G. Gladwin.

Mr. J. Bower's Chuck for straight lines, segments, and eccentric turning.

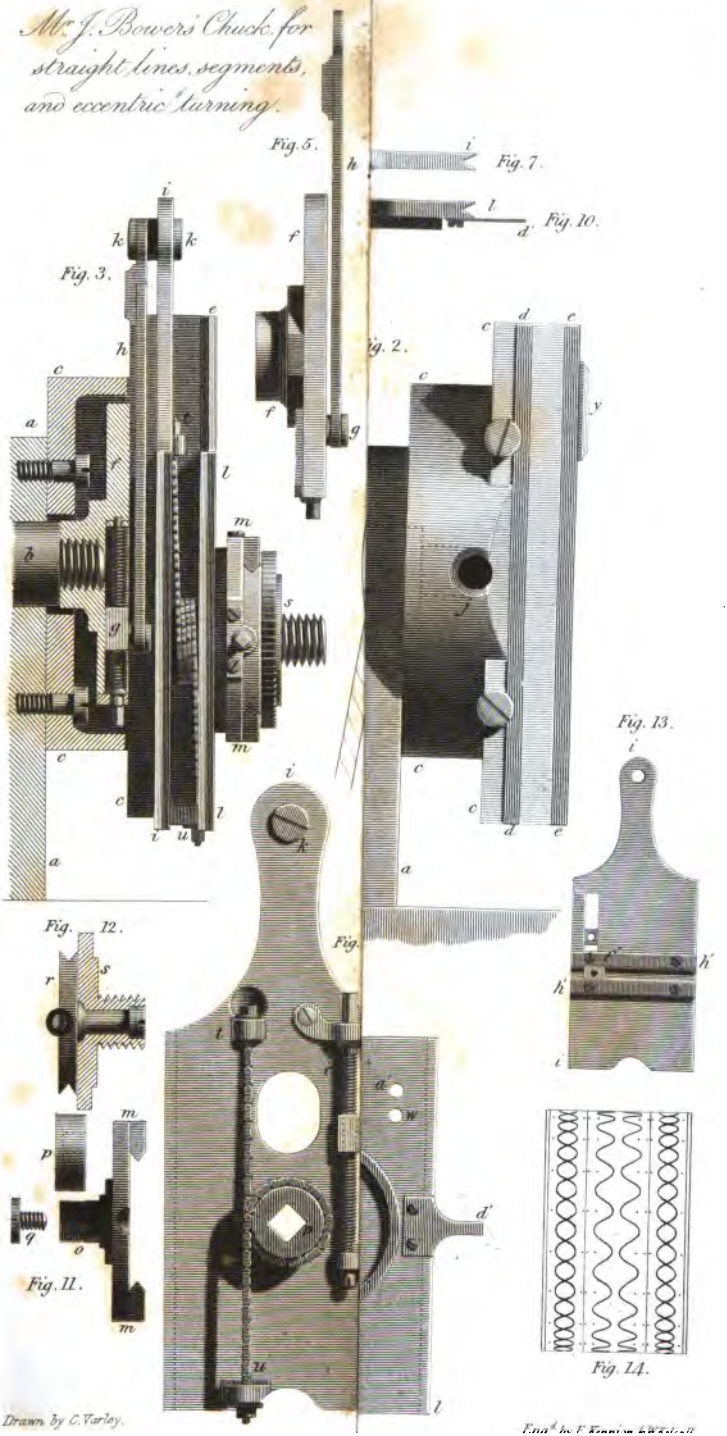

Drawn by C. Varley.

Engd. by F. Kennion & W. Wilson

Mr. Machin's Lock.

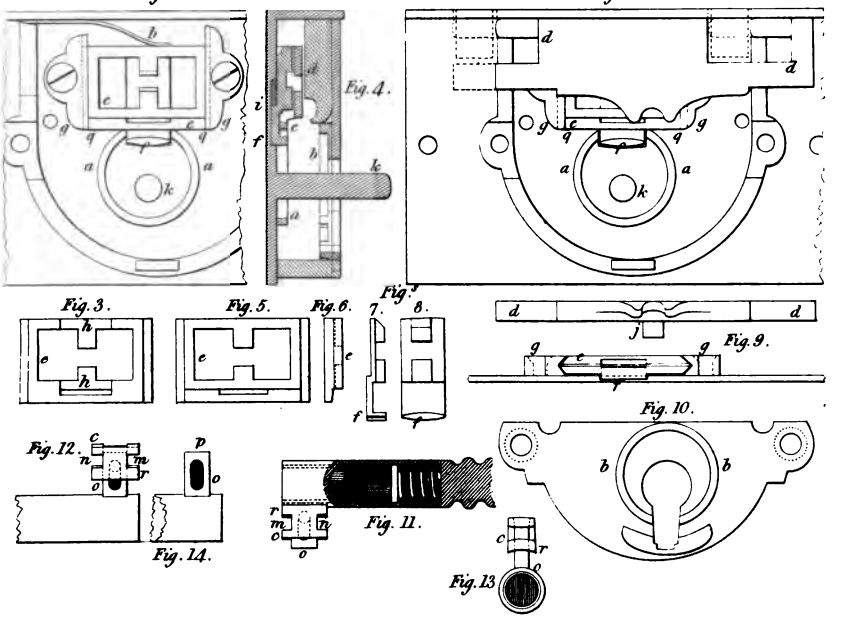

Mr. Smart's wrought-iron Beam.

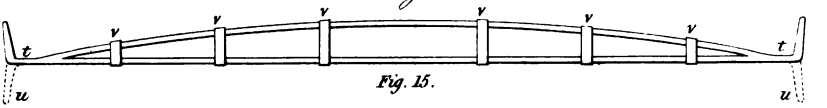

Mr. Caffin's Instrument for filling Cartridges.

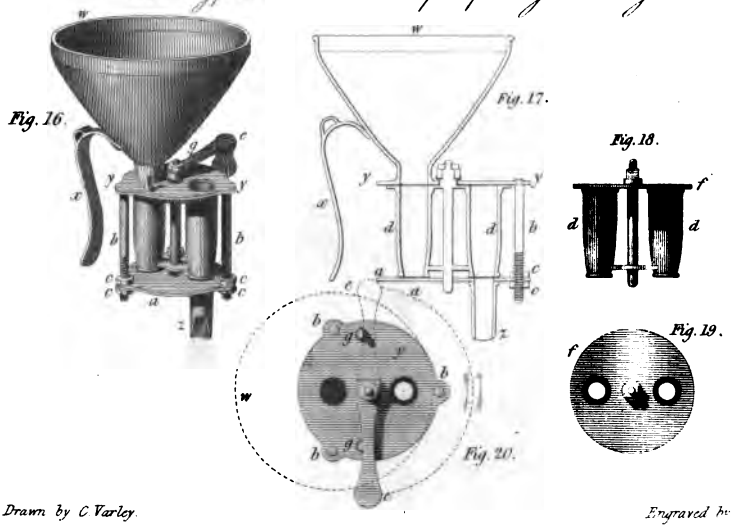

Drawn by C. Varley.

Engraved by

Mr. J. P. Paine's Self-illuminating Public Clock.

Fig. 1.

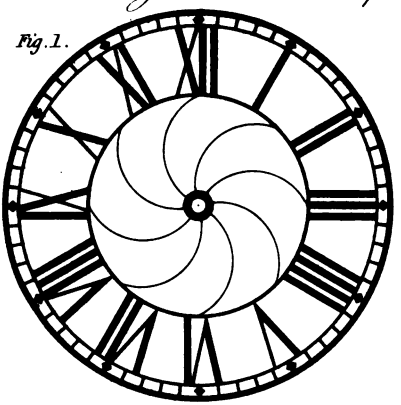

Fig. 3.

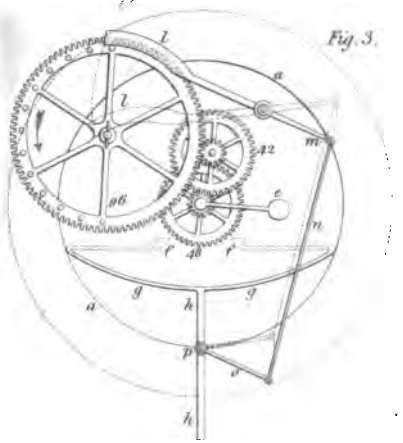

Fig. 4.

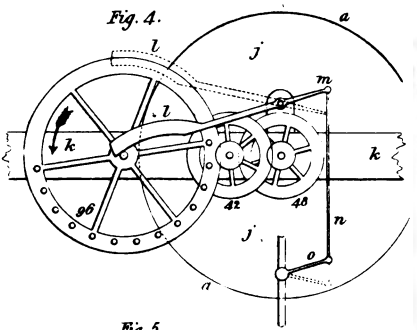

Fig. 2.

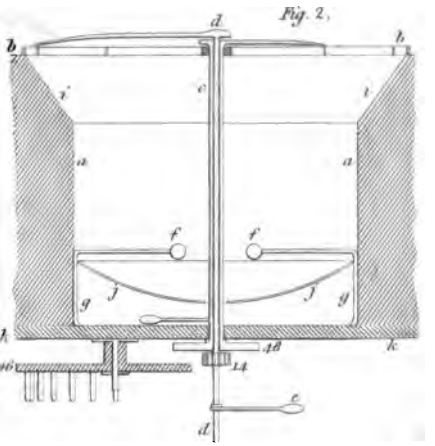

Fig. 5.

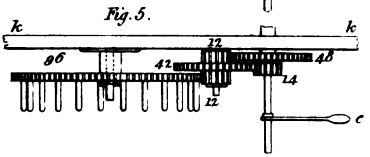

Mr. J. Packham's Self-adjusting Truss & bandage.

Fig. 8.

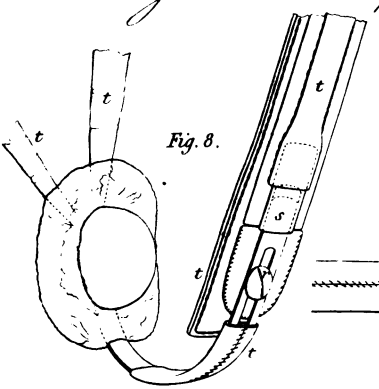

Fig. 9.

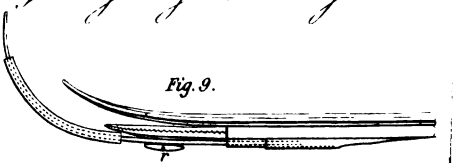

Fig. 6.

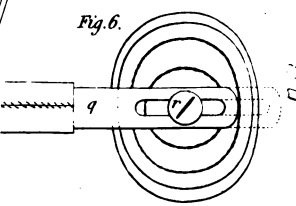

Fig. 7.

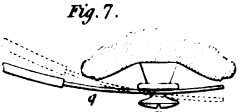

Drawn by C. Varley.

Engraved by

Mr. J. Bower's Chuck for straight lines, segments, and eccentric turning.

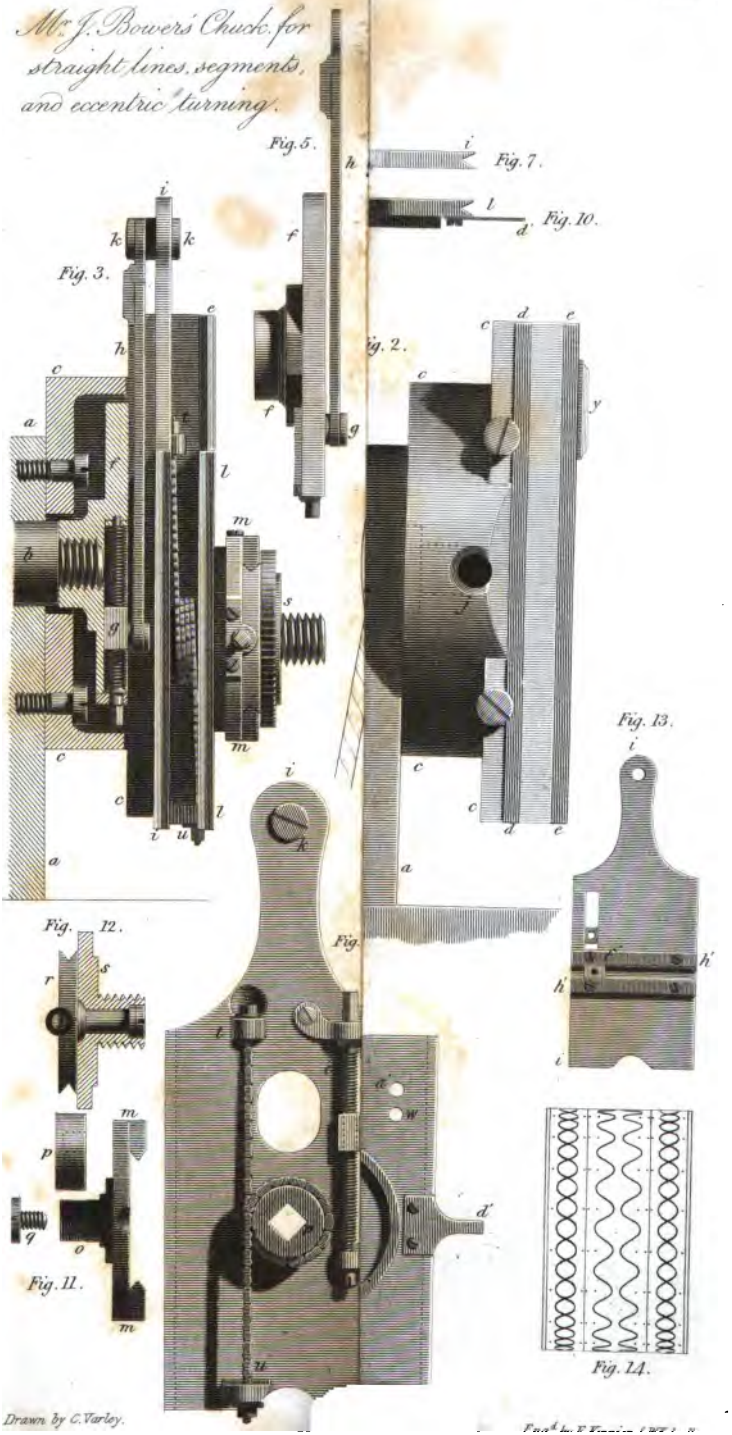

Drawn by C. Varley.

Mr. Cowen's Syphon for Draining.

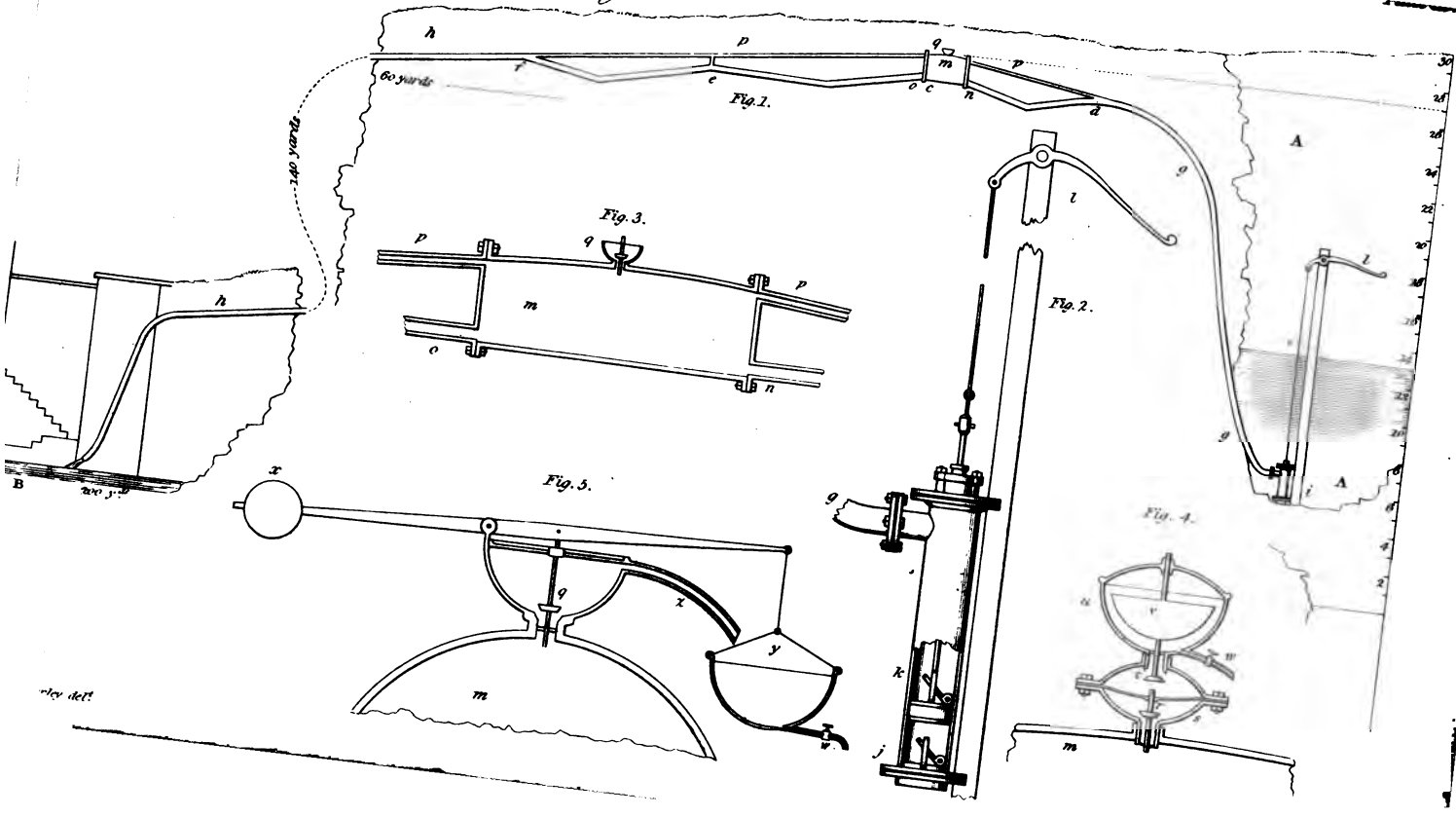

LIST OF MEMBERS

At the end of the Session 1826–7.

N. B. Those marked thus ** pay Five Guineas annually.
* pay Three Guineas annually.
§ are perpetual Members.

§ THE EMPEROR OF RUSSIA.

J. QUINCY ADAMS, Esq. President of the U. States.

A.

§ Atholl, John, Duke of, K.T. F.R.S. 11 *St. James's-square, and Blair Athol, N. B.*
* Alvanley, William, Lord, 4 *Park-place, St. James's*
§ Anspach, Elizabeth, Margravine of
Acland, Sir Thomas Dyke, Bart. M.P. (V.P.) *Killerton, Devonshire*
§ Antrobus, sir Edmund, Bart. F.R.S. F.S.A. M.R.I. *Hyde-park-corner, and Eaton-hall, Congleton*
Abbs, William, Esq. *Pinner*
Ablett, Joseph, Esq. *Llanbeder-hall, near Ruthen*
Abraham, John Hessey, Esq. F.L.S. *Sheffield*
Abraham, Robert, Esq. 27 *Keppel-street*
Ackermann, Mr. Rudolph, *Strand*
§ Ackers, James, Esq. *Lark-hill, near Manchester*
Acton, Samuel, Esq. 32 *Wilson-street, Finsbury-square*
Adair, Alexander, Esq. *Pall Mall*
§ Adam, James, Esq. *Lower Milnthorp, Kendal*
Adams, Mr. George, 28 *Haymarket*
Adams, Mr. Jesse
Adams, Mr. John, jun. *Hampton-street, Walworth*
Addison, R. Esq. *Batavia*
Addison, Robert, Esq.
Adlard, Mr. John, *Villiers-street, Strand*
Adrian, Mr. W. T. *Pentonville*
Agace, Daniel, Esq. 26 *Gower-street*
Agar, John, Esq. 59 *Stafford-place, Pimlico*
Agar, James, Esq. F.H.S. 5 *Hare-court, Temple*
Aikin, C. R. Esq. 33 *Great James-street, Bedford-row*
Aikin, Mr. George, *Harlington, Bedfordshire*
Aikin, Mr. William Orton, 43 *Lamb's-Conduit-street*
§ Ainger, Mr. Alfred, M.R.I. 19 *Doughty-street*
Ainslie, Henry, M.D. 25 *Dover-street*

Ainsworth, Richard, Esq. *Moss Bank, near Bolton*
Alcock, T. Esq. 11 *New Burlington-street*
Aldridge, John, Esq. 9 *Lincoln's-inn*
§ Alexander, Claude, Esq.
Alexander, E. N. Esq. *Halifax, Yorkshire*
Alexander, Robert, Esq. F.S.A. 3 *Essex-court, Temple*
Allen, Samuel, Esq. *(abroad)*
Alvarez, Joseph, Esq. *(abroad)*
§ Ames, John, Esq. *Clifton Wood, near Bristol*
Amesbury, J. Esq. 82 *Great Surrey-street*
Anderton, James, Esq. 50 *Lincoln's-inn-fields*
Annand, Alexander, Esq. 9 *Adelphi-terrace*
Appleyard, Frederick Newman, Esq. *Lincoln's-inn-fields*
§ Arabin, Septimius, Captain R. N. *(abroad)*
Arding, Mr. James, 62 *Dorset-street, Salisbury-square*
Arkwright, Richard, Esq. M.P. F.H.S. *Cromford, Derbyshire*
§ Arnold, J. S. Esq. 31 *Golden-square*
Arthur, Mr. James Henry, 76 *Cheapside*
Ashley, Mr. Joshua, 135 *Regent-street*
Assereti, Mr. Anthony, *Bridge-street, Westminster*
Atkins, John, Esq. (Alderman), 7 *Walbrook*
Atkinson, Peter, Esq. *York*
Atkinson, Thomas, Esq. *Old Swan-lane*
Atkinson, William, Esq. 9 *Paternoster-row*
Attersol, Joseph, Esq. 1 *John-street, Berkeley-square*
Auld, William, Esq. *Edinburgh*
§ Austen, Benjamin, Esq. 32 *Guildford-street*
Austine, Mr. George, *(abroad)*
Ayer, C. A. Esq. 60 *Lower Grosvenor-street*
Aylmer, Mr. G. J.

B.

§** Bedford, John, Duke of, (V.P.) F.S.A. F.L.S. F.H.S. 31 *St. James's-square, and Woburn, Bedfordshire*
Bathurst, Earl, K.G. 15 *Great Stanhope-street, and Oakley, Gloucestershire*
§ Beverley, Algernon, Earl of, 8 *Portman-square*
Breadalbane, John, Earl of, F.R.S. F.H.S. 91 *Park-lane, and Kelchburn-castle, Argyleshire*
§ Bristol, Frederick William, Marquess of, F.R.S. 6 *St. James's-square, and Ickworth Park, Suffolk*
§ Buchan, David, Earl of, LL.D. F.R.S.
§ Bayntun, Sir Henry William, Vice-Admiral, K.C.B.
§ Brooke, Sir Richard de Capel, Bart. F.R.S. M.R.I. F.H.S. *Great Oakley, near Kettering*
Belson, Major-General Sir Charles Philip, 50 *Park-street*
§ Balcarras, James, Earl of, 21 *Berkeley-square; Earlsferry Abbey, Fife; and Haigh-hall, Lancashire*

Backler, Joseph, Esq.
§ Bacon, John, Esq. F.S.A. 17 *Newman-street*
Badnall, Mr. Richard, jun. *Leek, Staffordshire*
Bagnold, Captain T. M. *(abroad)*
Bailey, Mr. Edward, 272 *High Holborn*
Bailey, Mr. George, 16 *Hart-street, Bloomsbury*
§ Bailey, Joseph, Esq. *Nanty-glo, near Abergavenny*
Bailey, Mr. William, 272 *High Holborn*
Bainbrigge, William, Esq. 44 *Parliament-street*
Baker, Mr. Ezekiel, 24 *Whitechapel-road*
Baker, Mr. Thomas, *Fore-street, Cripplegate*
Baker, Thomas, Esq. *Wilton-place, Knightsbridge*
Baker, Mr. Richard, 65 *Fore-street, Finsbury*
Baldwin, Robert, Esq. 6 *Queen's-square, Bloomsbury*
Bangley, George, Esq. 24 *John's-wood, Regent's-park*
§ Barclay, Arthur, Esq. 43 *Grosvenor-place*
Barker, Timothy William, Esq. 80 *Gracechurch-street*
§ Barlow, P. Esq. F.R.S. *Royal Military Academy, Woolwich*
Barlow, Peter, Esq. *North-street, Dublin*
§ Barnard, Edward, Esq. *Deptford*
Barnes, John, Esq. 4 *Mercer's-place, Commercial-road*
Barnes, Mr. Will. Geo. 15 *Great Russell-st. Covent-garden*
Barnet, Richard Clemson, Esq. 62 *Mortimer-street*
Barraud, Mr. F. J. 85 *Cornhill*
Barron, Mr. Francis William, 479 *Strand*
Barrow, Mr. Samuel, *Vauxhall Wharf*
Barry, Alexander, Esq. 1 *Bath-terrace, Kennington-road*
Barry, Charles, Esq. *Ely-place, Holborn*
§ Barry, P. B. Esq. *Totterton, Notts*
Barth, Mr. Benjamin, *Cockspur-street*
Barton, John, Esq. *Royal Mint*
Barton, Mr. Thomas
§ Bate, John, Esq.
Bayley, Mr. Joseph, 8 *Thayer-street, Manchester-square*
Baynes, Mr. Charles, *Duke-street, Lincoln's-inn-fields.*
Beale, Mr. Lionel John, *Bedford-street, Strand*
Beamish, Richard, Esq.
§ Bean, Nathaniel, Esq. *Bath*
§ Bean, Captain Isaac, *Bath*
Beauchamp, Mr. William, 22 *Grafton-street, Soho*
§ Beaufoy, Henry, Esq. F.R.S. F.L.S. *South Lambeth*
Beazley, Charles, Esq. 13 *John-street, Adelphi*
Beckwith, Mr. Henry, 58 *Skinner-street*
Beckwith, Mr. W. A. 58 *Skinner-street*
Bedingfield, John, Esq. F.S.A.
Bedington, William, Esq. *Camphill, Birmingham*
Bedwell, Francis Benjamin, Esq. 69 *Lamb's Conduit-street*
Behnes, Mr. William, 91 *Dean-street, Soho*

Bellamy, John, Esq. *House of Commons*
Bennet, Mr. Joseph, *Horseferry-road*
Benson, Arthur, Esq. 19 *Abingdon-street*
Benson, Mr. John, *William-street, Bridewell Precinct*
Benwell, Joseph, Esq. *Liverpool*
§ Berkeley, John, Esq.
Bernasconi, Francis, Esq. 20 *Alfred-place*
Bernasconi, Francis, jun. Esq. 20 *Alfred-place*
Berry, Mr. Miles, 53 *Parliament-street*
Bevan, Mr. George, *Edgeware*
Biggs, Mr. Matthew, *(abroad)*
Binyon, Mr. Charles, 2 *Fenchurch-street*
Binyon Mr. Edward (Chairman of the Committee of Miscellaneous Matters), 12 *Bell's-buildings, Salisbury-square*
Birch, Mr. Charles Lucas, 71 *Great Queen-street, Lincoln's-inn-fields*
Bird, Mr. G. *Hammersmith*
Bird, Mr. Stephen, *Kensington*
Birkbeck, George, M.D. 50 *Old Broad-street*
Birnie, George, Esq. *New-street, Dorset square*
Bish, Thomas, Esq. 9 *Cornhill*
Bishop, George, Esq. 12 *Finsbury-place*
Bishop, Mr. John, *Rolls-buildings*
Bishop, William, Esq. 22 *North-bank, Lisson-grove*
Blackburne, John, Esq. *Church-yard-court, Temple*
Blackburne, John, Esq. M.P. F.R.S. 2 *Park-st. Westminster*
§ Blackett, John, jun. Esq. *Lloyd's Coffee-house*
Blackett, Powell Charles, Esq. 11 *Park-street*
Blades, John, Esq. 5 *Ludgate-hill*
Blair, Marcus, Esq. 45 *Margaret-street, Cavendish-square*
Blake, Mr. Charles, *Quintero, Chili, South America*
Bland, Michael, Esq. F.R.S. F.S.A. F.L.S. 30 *Montague-place, Russell-square*
Blizard, Mr. Allen, *Park-lane*
Blount, W. Esq. 63 *Upper Norton-street*
Blyth, Henry, Esq. *Burnham-Deepdale, Norfolk*
Board, Rev. Richard, *Rector of Westerham, Kent*
Boatright, Mr. James, 41 *Bury-street, St. James's*
§ Boddington, Samuel, Esq. 31 *Upper Brook-street*
Bodkin, Mr. William Henry, (Chairman of the Committee of Accounts), 1 *Tanfield-court, Temple*
Boissier, George Richard, Esq.
Bollaert, Mr. W. *(abroad)*
Bond, Mr. Charles, 7 *Myddleton-street, Clerkenwell*
Bonelli, Angiolo, Esq. *(abroad)*
Booth, John, Esq. 34 *Red Lion-square*
Booth, Felix, Esq. 3 *Russell-square*
Borradaile, R. Esq. 5 *Barge-yard, Bucklersbury*

Borradaile, W. Esq. 34 *Fenchurch-street*
§ Bosanquet, Augustus, Esq. 18 *Wimpole-street*
Bostock, John, M.D. F.R.S. F.L.S. F.G.S. 22 *Upper Bedford-place, Russell-square*
Botfield, Thomas, Esq. *Hopton-court, near Bewdley, Worces.*
Botfield, William, Esq. *Decker-hill, near Shifnal*
Bower, Mr. John, *Clerkenwell-green*
Bowling, John, Esq. *St. George's Hospital, Hyde-pk.-corner*
Braby, Mr. James, *Duke-street, Commercial-road, Lambeth*
Bradley, Mr. John, *Worcester*
Bradshaw, Joseph Hoare, Esq. *Lombard-street*
§ Bradshaw, R. Haldane, Esq. M.P. *Worsley-hall, Lancashire*
§ Braithwaite, Mr. John, *New-road*
§ Bramah, Mr. F. F.H.S. *Woodlands, Tooting*
§ Bramah, Mr. Timothy (Chairman of the Committee of Mechanics), *Biggin-hill, Norwood*
Brant, Mr. Thomas, *Hatton-garden*
§ Brennan, Charles, Esq.
Brice, Alexander, Esq. 17 *Euston-square*
Bridger, Mr. George, 7 *Aldgate*
Brindley, Joseph, Esq. *Rochester, Kent*
Broadwood, James, Esq. 33 *Great Pulteney-street*
Broadwood, Thomas, Esq. 33 *Great Pulteney-street*
Brockedon, William, Esq. (Chairman of the Comm. of Polite Arts) 11 *Caroline-street, Bedford-square*
Brookes, Samuel P. Esq. *Ross, Herefordshire*
§ Brookes, Mr. William, *New-street-square*
Brooks, Mr. George Eyre, *Old Bond-street*
Brougham, Henry, Esq. M.P. F.R.S. 5 *Hill-street, Berkeley-square*
Broughton, Mr. Edward, *Southampton-street, Strand*
Brown, Burton, Esq. 1 *Stamford-street, Blackfriars*
Brown, Henry, Esq. *Derby*
Brown, Henry, Esq.
Brown, Captain Samuel, R.N. *Mall, Hammersmith*
Browne, Barwell, Esq. 30 *Wood-street, Cheapside*
§ Browne, J. H. Esq. *Weymouth*
Browne, W. Meredith, Esq. *King-street, Covent-garden*
§ Browning, James, Esq. 113 *St. John's-street*
Bruce, John, Esq. 16 *King's-parade, King's-road, Chelsea*
§ Brunel, Mark I. Esq. F.R.S. *Bridge-street, Blackfriars*
Bryan, Mr. Robert, *Great Chapel-street, Westminster*
Buchanan, Walter, Esq. *Mark-lane*
Buck, Rev. John, 28 *Arundel-street, Strand*
§ Buller, John, Esq.
Bulmer, William, Esq. *Clapham-rise*
Burbidge, Mr. James, 130 *Fleet-street*
Burchell, James, Esq. 24 *Red Lion-square*

Burdon, Alexander, Esq. 5 *Norfolk-street, Strand*
§ Burgess, Mr. William Robert, 107 *Strand*
Burk, Thomas Haviland, Esq. *Chapel-stairs, Lincoln's-inn*
Burnett, William, Esq. 61 *Torrington-square*
Burrow, Rev. E. J. D.D. F.R.S. F.S.A. *Enfield, Middlesex*
Burt, Mr. Henry Potter, *Devizes*
Burton, Lancelot, Esq. 21 *Newcastle-street, Strand*
Bury, William Fleetwood, Esq. 16 *Newgate-street*
Busk, Jacob Hans, Esq. *Ponsbourn, Herts*
§ Butler, Mr. Thomas, 4 *Cheapside*
Butterworth, William, Esq. *Berwick-place, Bermondsey*
Bye, John, Esq. 198 *High Holborn*

C.

Clarendon, John Charles, Earl of, 18 *North Audley-street*
§ Colchester, Charles, Lord, 18 *Spring-gardens, and Kidbrook, Sussex*
§ Clarges, sir Thomas, Bart. 26 *South-street, Grosvenor-sq.*
Clifford, Hon. Hugh
§ Cabbell, Benjamin Bond, Esq. F.H.S. M.R.I. M.R.A.S. 1 *Brick-court, Temple*
Caddell, David, Esq. *Salisbury-square*
Calder, Mr. James, *Melissa-place, Brixton-hill*
Callahan, Mr. John, *Exeter-street, Strand*
Callam, Mr. Charles, 57 *Great Queen-st. Lincoln's-inn-fields*
Calverly, Thomas, Esq. 3 *Berkeley-square*
§ Campbell, Duncan, Esq. 22 *Alfred-place, Bedford-square*
§ Capel, John, Esq. 32 *Russell-square*
§ Cardwell, John, Esq. *Liverpool*
Carpue, J. C. Esq. F.R.S. 72 *Dean-street, Soho*
Carter, Mr. Charles John
Cartwright, Samuel, Esq. 32 *Old Burlington-street*
Caslon, Mr. Henry, 62 *Chiswell-street*
§ Cater, Richard, Esq.
Cato, Mr. James, 42 *Ludgate-hill*
Cattley, William, Esq. F.H.S. *Barnet*
Cecil, Mr. Samuel, *(abroad)*
§ Chalmers, Alexander, Esq. *Throgmorton-street*
Chambers, Mr. Charles, 91 *Tottenham-court-road*
Chambers, Mr. Francis, 3 *Willow-cottages, New North-road, near Canonbury*
Chambers, Mr. Richard, F.L.S. *Castle-street, Leicester-sq.*
Chapman, Thomas Sands, Esq. 11 *Henrietta-street, Brunswick-square*
Chapman, Miss, 37 *Great Russell-street*
§ Chantrey, Francis L. Esq. D.C.L. R.A. F.R.S. F.S.A. *Belgrave-place, Pimlico*
§ Chard, Mr. James

Charrington, Nicholas, Esq. *Mile End*
Charrington, Nicholas, jun. Esq. *Mile End*
Chater, Mrs. *Kilbourne, Middlesex*
Chater, Mr. Joseph, jun. *St. Dunstan's-hill*
Chawner, Thomas, Esq. 82 *Guildford-street*
Cherry, Mr. Frederick C. *Clapham*
*§ Clark, Richard, Esq. Chamberlain of London, F.S.A. *Bridge-street, Blackfriars*
Clark, R. H. Esq. *Bridge-street, Blackfriars*
Clarke, Frederick Arnaud, Esq.
Clarke, George, Esq. *at Mr. J. Moss's, druggist, Stratford, Essex*
Clarke, Thomas Tuesdale, Esq. 34 *Upper Brooke-street*
Clarke, William, Esq. 2 *James-street, Adelphi*
Clarke, William Tierney, Esq. *Hammersmith*
Clayton, Mr. Japheth, 24 *Old Bond-street*
Clement, Mr. Joseph, 19 *Prospect-place, Newington Butts*
Cobbett, Pitt, Esq. 14 *Bedford-street, Strand*
§ Coggan, Captain
§ Colby, Thomas, Lt.-Col. Royal Engineers, LL.D. F.R.S. L. and E. *Tower of London*
Cole, John, Esq. 101 *High Holborn*
Cole, J. F. Esq. 3 *New Bond-street*
§ Coles, James, Esq. 39 *Old Change, and Herne-hill*
Coles, Mr. Thomas
§ Coles, William, Esq. 7 *Mincing-lane*
§ Collard, George, Esq. 16 *Clifford's-inn*
Collinge, Charles, Esq. *Bridge-road, Lambeth*
Collinge, John, Esq. *Bridge-road, Lambeth*
Collingridge, Thomas, Esq. *Liquorpond-street*
Collingwood, John, Esq. 138 *Strand*
Collins, Mr. William, 227 *Strand*
Colnaghi, Mr. D. *Pall-Mall East*
Colnaghi, Mr. Martin Henry, *Cockspur-street, Charing-cross*
§ Colquhoun, James, Esq. 13 *St. James's-place*
Combes, John, Esq. *Gas Light Company, Ratcliffe*
Compton, Mr. Henry, 135 *Fenchurch-street*
Coneys, Thomas, Esq. 24 *Downing-street*
Cony, Thomas, Esq.
Cooke, Charles Gomond, Esq. *Southampton-st, Covent-gard.*
Cooke, Mr. H.
Cooke, Layton, Esq. (Chairman of the Committee of Agriculture), 69 *Great Russell-street, Bloomsbury*
Cooke, Mr. William
Cooke, Edward, Esq. 1 *Elm-court, Temple*
Cooper, George, Esq. 7 *Copthall-court, Throgmorton-street*
Cooper, Mr. John Thomas, 9 *Paradise-street, Lambeth*
Cooper, Mr. Joseph Henry, *Milbank-street, Westminster*

Copland, Alexander, jun. Esq. 91 *Gloster-place*
Copland, Charles, Esq. 2 *James-street, Adelphi*
Copland, William, Esq. 29 *Great George-street, Westminster*
§ Coppens, B. M.D.
§ Cornell, G. Esq. 17 *Buckingham-street, Fitzroy-square*
Cosser, Mr. Andrew, *Pedlar's-acre*
Cottam, Adam, Esq. *Whalley, near Blackburn*
Cottam, Mr. George, F.H.S. (Chairman of the Committee of Manufactures), *Agricultural Repository, Winsley-st.*
Courthope, George, Esq.
Coward, Mr. George, 2 *Hanover-street, Hanover-square*
Coward, Mr. John, *(abroad)*
Cowling, Mr. William, 40 *Charles-street, Westminster*
Cowper, Henry, Esq. 16 *Southampton-street, Strand*
Cox, Charles, Esq. *Beaufort-wharf*
Cox, Stephen, Esq. 22 *Nottingham-street*
§ Cox, William, Esq. *Dartmouth-row, Blackheath*
§ Coxe, Peter, Esq. 2 *Archer-street, Soho*
Coxwell, Henry, Esq. F.L.S. *Rolls-buildings, Fetter-lane*
Crace, Mr. Frederick, 14 *Wigmore-street, Cavendish-square*
Crace, Mr. Henry, 226 *Regent-street*
Craig, Charles Alexander, Esq. 12 *Great George-street, Westminster*
Crake, William, Esq. 18 *Old Quebec-street*
Crane, Mr. H. S. *Stratford, Essex*
Crauford, William Petrie, Esq. 97 *Mount-st. Grosvenor-sq.*
Crawshay, William, Esq. *George-yard, Upper Thames-st.*
Crawter, Henry, Esq. 7 *Southampton-buildings, Holborn*
Creyke, Ralph, jun. Esq. *Rawcliffe-house, Thorne, Yorkshire*
Cribb, Mr. William, 34 *King-street, Covent-garden*
Crockford, Mrs. *Sussex-place, Regent's-park*
Crockford, Miss, *Sussex-place, Regent's-park*
Croggan, William, Esq. *Belvidere-road, Lambeth*
§ Crowe, Philip, Esq. *Hartley, Coulsdon, Surrey*
Cruckshanks, Mr. Alexander, *Quintero, Chili, South America*
Cubitt, Mr. Thomas, *Gray's Inn-lane-road*
Cubitt, Mr. William, 1 *Derby-street, Whitehall*
Cuff, Mr. J. 50 *Curzon-street*
Cumming, Mr. George
Cuppage, Lieut.-Gen. Art. *Shooter's-hill*
Curl, Mr. Charles, 6 *Grosvenor-street, West Pimlico*
§ Curties, John, Esq. 39 *Devonshire-place*
** Curwen, John C. Esq. (V.P.) M.P. *Workington-hall, Cumberland*

D.

Dalhousie, George, Earl of, Governor-General of Canada

** DARTMOUTH, William, Earl of, F.H.S. 12 *Berkeley-square, and Sandwell-park, Staffordshire*
§ DE DUNSTANVILLE, Francis, Lord, *South-place, Knightsbridge, and Tehiddy-park, Cornwall*
DUNALLY, Henry, Lord, *Dunally-castle, Tipperary*
§ DENYS, Sir George William, Bart. 15 *Stratford-place, and Easton Neston, Northamptonshire*
DUCKETT, sir George, Bart. F.R.S. F.S.A. F.H.S. 45 *Hertford-street, May-fair*
Daly, John, jun. Esq. 155 *Upper Thames-street*
Dalton, Henry, Esq. F.R.S. *Knaith, Lincolnshire*
Dalton, John, Esq. 1 *Lime-street-square*
§ Daniel, John, Esq.
D'Arcy, Col. Joseph, F.H.S. *Bath-house, Leicester-square*
Darke, Samuel W. Esq. 30 *Red-Lion-square*
Davenport, Mr. John, *King's-arms-yard, Coleman-street*
§ Davidson, John, jun. Esq. *Cork-street*
Davidson, Thomas, Esq. *Cork-street, Bond-street*
Davies, Mr. David, 39 *Gutter-lane*
Davies, Mr. David, *Wigmore-street*
Davies, D. D. M.D. 29 *George-street, Hanover-square*
Davies, John, Esq. 8 *Devonshire-square, Bishopsgate-street*
§ Dawkins, James, Esq. F.R.S. F.S.A.
Day, David Hermitage, Esq. *Rochester*
§ Day, Richard, Esq. 28 *Montague-street, Russell-square*
Day, Thomas, Esq. 28 *Montague-street, Russell-square*
Dayus, Mr. Henry, *Bank-side*
§ Deacon, James Henry, Esq. 15 *Duke-street, Westminster*
Deakin, Francis, Esq. *Birmingham*
Deakin, John Osmond, Esq. *Downing College, Cambridge*
Dease, William Henry, Esq. 5 *Earl-street, Dublin*
De Boffe, John Charles, Esq. 9 *Bedford-street, Bedford-sq.*
Delafons, John Palmer, Esq. 26 *George-street, Hanover-sq.*
Delamain, William, Esq. 6 *Wells-street, Oxford-street*
Denham, Mr. B. E. 17 *Bull and Mouth-street*
§ Dent, William, Esq. *Battersea Rise*
Depree, Charles Thomas, jun. Esq. 6 *Mecklenburg-street, near the square*
De Renzy, Capt. George Webb, *Newcastle-county, Limerick*
§ Des Granges, Mr. Peter, 33 *Cockspur-street*
Devaux, Charles Pierre, Esq. *Fenchurch-street*
Devey, Mr. William, 8 *Shoe-lane*
Deville, Mr. James, 367 *Strand*
Deville, Mr. William, 367 *Strand*
§ Dew, Dyer, Esq. 59 *Guildford-street*
§ Dickinson, Charles, Esq. F.R.S. F.S.A.
Dickson, James, Esq. *Kingston, Jamaica*
Dickson, Mr. John, *Earl-street, Horse-ferry-road*

Dickson, Jonathan, Esq. *(abroad)*
Dixon, Mr. Daniel, *Mark-lane*
§ Dollond, George, Esq. F.R.S. 59 *St. Paul's church-yard*
Donkin, Bryan, Esq. 80 *Great Surrey-st. Blackfriars-road*
Donkin, John, Esq. 80 *Great Surrey-street, Blackfriars-road*
Donalley, Admiral, *Hammersmith*
Douglas, Mr. James, *Bow-lane, Cheapside*
Douglas, John, Esq. *Old Hull, near Manchester, and Gyrn, Flintshire*
Dow, Mr. James, 8 *Parade, Tower*
Dowley, Mr. J. 35 *Howland-street*
Dowson, Joseph, Esq. 69 *Welbeck-street, Cavendish-square*
Drane, Thomas, Esq. *Bromley, Middlesex, and* 69 *Cornhill*
Drew, Mr. Thomas, 20 *Queen's-buildings, Brompton*
Driver, G. N. Esq. 13 *New Bridge-street*
§ Dubois, William, Esq. 416 *Strand*
Du Cane, Charles, Captain R.N.
Dudley, Mr. Thomas, 34 *King-street, Soho*
Duff, Arthur, Esq. 44 *Southampton-buildings*
Dugdale, Richard, Esq. *Great Marlborough-street*
Dunlap, J. Esq. 2 *Great Charlotte-street, Blackfriars*
§ Duppa, Mrs. *Upper Homerton*
§ Dutton, John, Esq.
Dyson, Thomas, Esq. *House of Commons*

E.

§ Egremont, George, Earl of, F.R.S. F.S.A. M.R.I. F.H.S. 4 *Grosvenor-place, and Petworth, Sussex*
§ Ellis, the Hon. G. Agar (V.P.) F.R.S. F.S.A. 8 *Spring-gardens*
§ Eaton, Peter, Esq. *Westford, Essex*
§ Eckersall, John, Esq. *Claverton, near Bath*
Eckstein, Mr. George Frederick, 13 *Holborn*
Edgar, Mr. Robert, jun. *Hart-street, Crutched-friars*
Edgar, William, Esq. 12 *Piccadilly*
Edkins, Mr. S. S. *Salisbury-square*
Edmiston, Mr. A.
Edmonds, James, Esq.
Edmonds, Mr. John, 43 *Fetter-lane*
Edridge, W. B. Esq. 28 *Haymarket*
Edwards, Mr. David John Moses Morgan Thomas, 21 *King street, Holborn*
Edwards, Mr. George, *Paul's Wharf*
Edwards, Hugh, Esq. 56 *Guildford-street*
§ Edwards, John, Esq. *Lynn, Norfolk*
§ Edwards, Thomas, Esq. *Swansea, Glamorganshire*
Eddy, Mr. Thomas, 354 *Oxford-street*

Elder, Mr. Alexander, 65 *Cornhill*
Eley, Mr. Charles, *Lovell's-court, Paternoster-row*
Elliot, John, Esq. F.R.S. *Pimlico*
§ Elliot, Obadiah, Esq. *Spring-hill, Bromley, Kent*
Elliott, A. Esq. *Osnaburg-street, Regent's-park*
Ellis, James, Esq. *Barming, Kent*
England, Mr. Joseph, jun. 1 *Wilmot-street, Brunswick-sq.*
§ Errington, John, Esq.
Essex, Mr. William, jun. *Polygon, Somers Town*
§ Evans, John, Esq. 32 *Hertford-street, May-fair*
Evans, Mr. John, 104 *Wardour-street*
Evans, Mr. John, *Gas Works, Horseferry-road*
Evans, Mr. Joseph, 25 *Northumberland-street, Strand*
Everill, Mr. Thomas, 67 *St. James's-street*
Eversfield, Mr. J. 3 *Smith-street, Westminster*
§ Ewbank, Andrew, Esq. 37 *Upper Grosvenor-street*

F.

Falmouth, Edward, Earl of, *St. James's-square*
Ferrers, Washington, Earl of, 9 *Queen Ann-street, Cavendish-square*
Folkestone, William, Viscount, 52 *Lower Grosvenor-street, and Coleshill-house, Berkshire*
§ Fermor, the Hon. J. W. Major-General, F.R.S. F.S.A. M.R.I. 2 *Upper Grosvenor-street*
Farquhar, Sir Robert Townshend, Bart, 2 *Richmond terrace, Whitehall*
§ Farquhar, Sir Thomas, Bart. 16 *St. James's-street*
Fowke, Sir Frederick, Bart. *Lawsley, Leicester*
Fairlie, John, Esq. 49 *York-terrace, Regent's-park*
Faraday, Michael, Esq. (Chairman of the Committee of Chemistry) F.R.S. F.G.S. M.R.I. *Royal Institution, Albemarle-street*
Farnell, John, Esq. *Isleworth*
Farnell, Henry, Esq. *Isleworth*
Fatton, Mons. 76 *St. James's-street*
Fawell, Mr. Thomas, *Old Broad-street*
Fay, Mr. Cyrus, 7 *Sackville-street*
Feetham, Mr. William, 9 *Ludgate-hill*
Fenn, Mr. Joseph, 105 *Newgate-street*
§ Fermor, William, Esq. *Tosmon, near Brackley*
Field, Mr. Joshua, *Cheltenham-place, Lambeth*
Field, Mr. John, 5 *Bennet-street, St. James's*
Field, Mr. Samuel, *Reading*
§ Field, William, Esq. *Cold-Harbour-lane, Camberwell*
Fielding, Jeremiah, Esq. *Manchester*
Fincher, Mr. Joseph, *Royal Institution, Albemarle-street*

Finden, Edward, Esq. 19 *Southampton-place, New-road*
Finn, Mr. Lawrence, 164 *Regent-street*
Firmin, Mr. Philip, jun. 153 *Strand*
Firmin, Mr. R. S. *Clare-court, Drury-lane*
Fisher, F. Esq. *Queen-square, Bloomsbury*
Fisher, Thomas, Esq. *Haverstock-hill, Hampstead-road*
Fisher, Thomas, Esq. *Gloucester-terrace, Hoxton*
Fitch, Mr. Samuel, 24 *Walbrook*
Fitzclarence, Colonel Frederick, 4 *Grosvenor-place*
Fitz-Gerald, Maurice, Esq.
Fitz-Gerald, Maurice, jun. Esq. *East Indies*
Fletcher, John, Esq. *Chester*
§ Fletcher, Matthew, Esq. 2 *Lime-street-square*
Fletcher, William Rivers, Esq. *Buckingham-street, Strand*
Flexney, Spencer, Esq. *Bedford-row*
Flight, Mr. James, 101 *St. Martin's-lane*
Flight, Joseph, Esq. 1 *Coventry-street*
Flindell, Mr. Thomas, 67 *St. Martin's-lane*
Flower, Henry, jun. 12 *Compton-terrace, Islington*
Foot, Mr. John, 2 *Parliament-place, Abingdon-street*
Forbes, John, Esq. *Church-street, Stoke Newington*
Forbes, L. H. Esq. *Hardingston, Northampton*
Forbes, William Nairn, Esq. *Blachford, N. B.*
Ford, Mr. W. T.
Forster, John, Esq. 18 *Carey-street, Lincoln's-inn*
Forsyth, William, Esq. 25 *Fenchurch-street*
Forty, Mr. William, *Tothill-street, Westminster*
Foss, Edward Smith, Esq. F.A.S. F.H.S 36 *Essex-street*
Foster, Thomas, Esq. 12 *Clement's-lane, Lombard-street*
Fowler, Mr. John, jun. *Belvedere-road, Lambeth*
Fox, James, Esq. *Plymouth*
Fox, Samuel, Esq. *London-house, Hackney*
Fox, Thomas, esq. R. N.
Fraser, William, Esq.
§ Freeman, Stephen, Esq. *Coventry*
§ Freir, Chevalier Cipriano Riberio, F.R.S. F.S.A.
French, Mr. J. M. *Sweeting's-alley*
Friend, Mr. H. *Bridge-street, Southwark*
§ Fuller, Mr. J. G. *St. James's-street*
Fullerton, William, Esq. *Skeldon, Ayrshire*
Furniss, Mr. Martin, 21 *Belgrave-place, Pimlico*

G.

Grantley, Lord
§ Glenlyon, James, Lord, 62 *Green-street, Grosvenor-square*
Greville, the Hon. Captain Robert Fulk
Gallienne, Mr. Richard, *Cambridge*

Gaitskell, Thomas, Esq. 229 *Bermondsey*
Galloway, Mr. Alexander, *West-street, Smithfield*
Galsworthy, John, Esq. 10 *Symond's-inn*
§ Galton, Samuel, Esq. *Dudston, near Birmingham*
Ganthony, Mr. Richard, 83 *Cheapside*
Gardner, Mr. Edward, *Hammersmith*
Gardner, Mr. James, 163 *Regent-street*
§ Garling, Mr. Henry, 13 *Little James-street, Bedford-row*
Garnett, Robert, Esq. 12 *Aldermanbury*
Garrow, George, Esq. *(abroad)*
Garvock, Captain John, 12 *South-place, Kennington, and Adjutant-General's Office, Horse-guards*
Gates, Mr. John, 36 *Great Queen-street*
Gautier, John Lewis, Esq. 41 *Speldhurst-street, Burton-crescent*
Geddes, Arthur, Esq. 6 *Stafford-place, Pimlico*
George, Mr. J. jun. *Holywell-street, Strand*
Gibbons, Mr. J. 3 *Red Cross-street*
Gibbons, Mr. John, 6 *King-street, Clerkenwell*
Gibbs, Mr. Joseph, *Crawford-mills, Kent*
Gifford, William, Esq. 5 *Great St. Helen's*
Gill, H. Esq. 26 *Hampton-street, Walworth*
Gill, Thomas, Esq. 125 *Strand*
Gillman, William, Esq. *Bank-buildings, Cornhill*
Glanville, Mr. Jeremiah, *Smith-street, Westminster*
Glass, Mr. T. 3 *Lowndes-terrace, Knightsbridge*
Gledstanes, J. H. Esq. 11 *Regent-street*
§ Goding, James, Esq. *Knightsbridge*
Goldring, George, Esq. 1 *Jamaica-place, Limehouse*
Goldsmid, Isaac Lyon, Esq. *Dulwich-house, Surrey*
Gomme, Mr. James, *Hammersmith*
Gooch, Richard, Esq. *Poland-street, Regent-street*
§ Good, Mr. William, 20 *Coleman-street*
Goodall, Thomas, Esq. 51 *Woburn-place*
Goodwin, Joseph, Esq. *Carlton Palace*
Gorman, John, Esq. *(abroad)*
Gosling, William, Esq. 5 *Portland-place*
Goudge, Alexander, Esq. 11 *Spital-square*
Gould, Captain R.N. *Frome-house, Dorchester*
Grandville, Lewis, Esq. *(abroad)*
Granville, A. B., M.D. F.R.S. F.L.S. M.R.I. 16 *Grafton-street, Bond-street*
Graves, William, Esq. *His Majesty's Printing-office, Harding-street, Shoe-lane*
Gray, Mr. Samuel Forfeit, F.L.S. F.H.S. 63 *Great Russell-street, Bloomsbury*
§ Gray, Walker, Esq. *Southgate, Middlesex*
Green, Henry, Esq. F.H.S. 25 *Gracechurch-street*

Green, James, Esq. *Falcon Glass-house, Blackfriars-bridge*
Green, Mr. James, 14 *Leman-street, Goodman's-fields*
§ Green, Peter, Esq. *Crookham, Berks*
Green, Mr. William, *Laytonstone*
Green, William Pringle, Lieut. R.N.
Green, Mr. William, *Tothill-street, Westminster*
§ Gregory, Richard, Esq. 56 *Berners-street*
Gregory, Mr. George Johnson, *Phœnix Gas-works, Bankside*
Greig, Alexander, Esq.
Greig, James, Esq. *Rectory-house, St. Michael's-alley, Cornhill*
Greig, William Esq. 32 *City-road*
§ Grenfell, Charles Pascoe, Esq. 16 *Chester-street, Grosvenor-place*
Griffin, Mr. John, 67 *Brunswick-street, Glasgow*
Griffith, J. Esq. 16 *Finsbury-place, South*
Griffith, Julius, Esq. *(abroad)*
Griffith, James, Esq. 3 *Gray's-inn-square*
Griffiths, Richard, Esq. *Thorn-grove, Worcester*
Grimble, Mr. James, jun. *Claremont-square*
Grindlay, Robert Melville, Esq. 35 *North Bank, Regent's-park*
Groom, Mr. John, 35 *Brompton-row*
Groom, Mr. Samuel, 22 *Connaught-square, Edgeware-road*
Grosett, J. R. Esq. M.P. 68 *Wimpole-street, and Laycock Abbey, Chippenham*
§ Grote, George, Esq. *Threadneedle-street*
Grove, Mr. Christopher, 150 *New Bond-street*
§ Guest, Josiah John, Esq. *Merthyr Tidvil*
Gunby, John, Esq. *Bordersley, near Birmingham*
§ Gwilt, George, Esq. F.A.S. *Union-street, Borough*

H.

* Hardwicke, Philip, Earl of, K.G. F.R.S. F.S.A. M.R.I. *St. James's-square*
* Harrowby, Dudley, Earl of, F.S.A. 39 *Grosvenor-square*
Hampson, Sir George, Bart. 31 *Hertford-street*
Henniker, the Hon. J. 21 *Grosvenor-square*
Herne, sir William, *Maidenhead*
Hack, Mr. Thomas, 171 *Upper Thames-street*
Haden, Mr. George, *Trowbridge, Wilts*
Hadley, Joseph Henry, Esq. *Laurel-cottage, Hampstead*
Hague, Mr. George, *Manchester*
Hakewill, Henry, Esq. 5 *Ulster-street, Regent's-park*
Hall, Samuel, Esq. *Basford, near Nottingham*
Hallen, Mr. Benjamin, 3 *Winsley-street, Oxford-street*
Hallett, William, Esq. *Farringdon, Berks*

Hamilton, James, Esq. *(abroad)*
Hamilton, John, Esq. 31 *Berwick-street, Soho*
Hamilton, Otho William Hawtrey, Esq. 5 *James-street, Westminster*
Hamilton, Robert, Esq. *(abroad)*
Hamilton, Mr. Thomas, 65 *St. James's-street*
§ Hammerton, Charles, Esq. *Whitefriars Dock*
Hammet, James Esdaile, Esq. 21 *Lombard-street*
§ Hammond, Anthony, Esq. 4 *Saville-row*
§ Hammond, William, jun. Esq. 9 *Queen-square, Bloomsbury*
Hancock, Samuel, Esq. *Navy Pay-office, Somerset-house*
Hannam, Peter, Esq. *Northborn-court, Deal*
Hansard, Thomas Curson, Esq. 11 *Salisbury-square, Fleet-street*
Hansard, James, Esq. 7 *Southampton-street, Bloomsbury*
Hansard, Luke G. Esq. 10 *Bedford-square*
Hanson, Mr. William, jun. 18 *George-street, Bryanstone-sq.*
Harcourt, C. H. Esq.
Harcourt, Rev. William, D.D. *Rectory-house, Ewell, Surrey*
§ Harding, John, Esq. *Pinhoe, Devon, and* 1 *York-place, Walworth*
Harding, Thomas, Esq. 167 *Great Surrey-street*
Harding, J. D. Esq. 12 *North-crescent, Tottenham-court-rd.*
Hardy, Robert, Lieut. R.N. *(abroad)*
Hardy, Mr. William, 5 *Wood-street, Coldbath-square*
§ Harman, Jeremiah, Esq. 6 *Adam's-court, Old Broad-street*
Harris, Robert, Esq. *Reading*
§ Harrison, George, Esq. 20 *Ebury-street*
§ Harrison, Mr. Henry, 31 *King-street, Covent-garden*
§ Harrison, James, Esq. F.H.S. (Chairman of the Committee of Agriculture), 1 *Southampton-place, Euston-square*
Harrison, Mr. William, *Devizes*
Harrison, Edmund, Esq. *Privy-council-office, Whitehall*
Hatchard, Charles, Esq. 1 *Belgrave-place, Pimlico*
Hawkins, James, Esq. *Albion-place, Blackfriars*
Hawkins, Capt. E. I. Company's Engineers, *(abroad)*
Hawks, John, Esq. *Duck's-foot-lane, and Gateshead, Durham*
§ Hayes, Charles, Esq. 112 *Albany-street, Regent's-park*
Hayes, Joseph, Esq. 31 *Upper Charlotte-street, Fitzroy-sq.*
Haynes, George, jun. Esq. *Hampstead-road*
Hayward, Mr. J. P. 97 *Newgate-street*
Heath, George, Esq. 57 *Park-street, Grosvenor-square*
Heaver, John, Esq.
Heaviside, John, Esq. F.R.S. F.S.A. 14 *George-street, Hanover-square*
§ Hedges, K. R. Esq. 47 *Dean-street, Soho*
Heming, D. Esq. 7 *Holborn-court, Gray's-inn*

Henchman, Francis, Esq. 38 *Great Ormond-street*
Hendrie, Mr. Robert, 12 *Tichborne-street*
Henekey, Mr. George, 29 *High-street, Shadwell*
Hennah, Mr. Henry, 17 *Essex-street*
Hennell, Mr. Edward, *Apothecaries' Hall*
Hennell, Mr. Henry (Chairman of the Committee of Chemistry), *Apothecaries' Hall*
Hennell, Mr. Robert, 3 *Lancaster-court, Strand*
Hennet, Mr. George, 5 *Great Ormond-street, Queen-square*
Henniker, Major Jacob, Captain R.N.
Herbert, Mr. William, 1 *Farm-street, Berkeley-square*
Herapath, W. Esq. *Bristol*
Hewitt, Mr. James, *Old Hummums, Covent-garden*
Hibon, Mr. William, 34 *Old Change*
Hibbert, Samuel, M.D. *Edinburgh*
Higden, George Byfield, Esq. *Denmark-hill, Camberwell*
§ Higgins, J. Esq. M.R.I. 370 *Oxford-street*
Hill, Mr. William, 5 *Charing-cross*
Hill, Mr. John, *Piccadilly, corner of Albemarle-street*
Hillman, James Penny, Esq. 79 *Lower Thames-street*
Hinxman, John, Esq. 70 *Great Russell-street*
§ Hoare, Charles, Esq. F.R.S. F.H.S. F.S.A. 37 *Fleet-street, and Luscomb, near Teignmouth*
Hobdell, Mr. Henry, *Bell's-buildings, Salisbury-square*
Hoblyn, Thomas, Esq. (V.P.) F.R.S. 125 *Sloane-street*
§ Hobson, William, Esq. *Mark-field, Stamford-hill*
Hodges, Henry, Esq. *Clapham Common.*
Hodges, Thomas Law, Esq. *Hempstead, Cranbrook, Kent*
Hodsoll, William Thomas, Esq.
Hoffman, John, Esq. 6 *Hanover-terrace, Regent's-park*
Holden, Edward, Esq.
Holdsworth, Arthur Howe, Esq. *Dartmouth*
Holford, Charles, Esq. F.H.S. *Hampstead*
Holland, S. C. Esq. 8 *Bishopsgate-within, and Roehampton*
Hollis, Charles, Esq. 10 *Upper Stamford-st. Blackfriars*
Holliday, Mr. Thomas, 26 *Dean-street, Soho*
Holmden, Mr. John George, 10 *President-street, West, Goswell-road*
Holmes, John Pocock, Esq. 27 *Old Fish-street, Doctors' Commons*
Holt, Mr. Thomas
Holtzapffell, Mr. I. J. *Charing-cross*
Homfray, George, Esq.
Hookey, Mr. William, *his Majesty's Dock-yard, Deptford*
Hooper, Mr. John, 20 *Queenhithe*
Hope, Benjamin, Esq. 21 *Lincoln's-inn-fields*
§ Hope, H. P. Esq. 30 *New Norfolk-street*
§ Hope, T. Esq. F.R.S. F.S.A. M.R.I. *Duchess-street*

Horton, R. Wilmot, Esq. M.P. (Under Secretary of State for Colonial Affairs), 4 *Richmond-terrace, Whitehall*
Hosking, Mr. William, 14 *Furnival's-inn*
Howard, William, Esq. 115 *Old-street*
Howe, John, Esq. 4 *St. Dunstan's-hill*
§ Howell, Edward, Esq. *Cheltenham*
§ Hoy, Michael, Esq. *Isle of Wight*
Hughes, Robert, Esq. 115 *Piccadilly*
§ Hughes, William Hughes, Esq. F.S.A. F.L.S. M.R.I. F.H.S. *Clapham Common, Surrey, and Belle-Vue-house, Ryde, Isle of Wight*
Hullett, John, Esq. 102 *Leadenhall-street*
§ Hume, Joseph, Esq. (V.P.) M.P. F.R.S. 6 *Bryanstone-square*
Hume, George Walter, Esq. 108 *Long-acre*
Hume, Joseph, Esq. 108 *Long-acre*
Hume, Robert Montague, Esq. 97 *Great Surrey-street, Blackfriars'-road*
Humfrey, Lebbeus Charles, Esq. 4 *Pump-court, Temple*
Humphrey, Mr. James W. *Guardian Fire-office*, 11 *Lombard-street*
Hunt, James, Esq. 4 *Craven-street, Strand*
Hunter, George Henry, Esq. 104 *Wood-street*
Hunter, Robert, Esq. F.A.S. 46 *Burton-crescent*
§ Hurd, Philip, Esq. *Temple, and Kentish-town*
Hurd, Captain Samuel P. *(abroad)*
Hurle, Henry, Esq. 20 *Bedford-row*
Hurlstone, Alfred P. Esq. *Clement's-inn, Strand*
§ Hurst, Robert, Esq. M.P. *Horsham-park, Sussex*
Hurst, Thomas, Esq. 390 *Strand*
Hurwood, Mr. W. E. *Webber-street, Coburg-theatre*
Hutchins, William, Esq. 25 *Hanover-square*
Hutchon, Thomas, Esq. 14 *Finsbury-circus*
Hutchons, Mr. James, 4 *Alsop's-place, Mary-le-bonne*
§ Hutton, Mr. John, *Marsk, near Richmond, Yorkshire*

I.

§ Ilchester, Henry Stephen, Earl of, *Burlington-street*
Ibbotson, J. Holt, Esq. 12 *Great Smith-street, Chelsea*
§ Idle, John, Esq. *Camberwell*
Ireland, J. Esq. 28 *Old Burlington-street*

J.

Jackson, Mr. George, 50 *Rathbone-place*
Jackson, John, Esq. 1 *Billiter-lane*
Jackson, Randle, Esq. *North Brixton, Surrey, and* 3 *Middle Temple-lane*

§ Jackson, Rev. William, *Couzen-lane, Upper Thames-street*
Jackson, George Edwin Ward, Esq. 4 *Lamb's-buildings, Temple*
Jacob, Joseph, Esq. *Michael's-grove, Brompton*
§ James, William, esq. *Warwick*
Jarman, Mr. J. B. 34 *St. James's-street*
Jeakes, Mr. William, 51 *Great Russell-street, Bloomsbury*
Jeffcott, John William, Esq.
Jenkins, Charles H. Esq. *Shard-place, Peckham*
Jennings, Henry C. Esq.
Jennings, Mrs.
Jennings, T. Esq. *Woodbine-cottage, Hampstead-green*
§ Jenour, Joshua, Esq.
Jenyns, Rev. George, *Bottisham-hall, Cambridgeshire*
* Jessup, William, Esq. *Farningham, Kent*
Joffroy, Mr. Lorenzo, 7 *Knightsbridge-terrace*
Johnson, Mr. Henry, 10 *Fountain-court, Strand*
Johnson, Mr. Joseph, 13 *Southampton-street, Strand*
§ Johnson, Mr. William, *Blackwall*
Johnston, Mr. John, 19 *Cursitor-street, Chancery-lane*
§ Johnston, Mr. Robert, *New-street-square, Fetter-lane*
Johnston, Mr. Robert, 68 *Cornhill*
Jones, Charles, Esq. 53 *Gower-street*
Jones, Mr. David, 12 *Millbank*
Jones, Mr. F. 5 *Ludgate-hill*
Jones, George, Esq. 21 *Old Fish-street, Doctors' Commons*
Jones, Mr. James, (Chairman of the Committee of Mechanics), 6 *Well-street, Wellclose-square*
§ Jones, John, Esq. 44 *Portland-place*
Jones, Mr. Martin, *Belvidere-road, Lambeth*
Jones, Thomas, Esq. 51 *Strand*
Jones, Mr. Thomas, 5 *Ludgate-hill*
Jones, Mr. Thomas, 90 *Long-acre*
Jones, William, Esq. 26 *Parliament-street*
Jorden, John Stubb, Esq. *Birmingham*
Joyce, Mr. Frederick, *Old Compton-street*
Jupp, William, Esq. 37 *Old Broad-street*

K.

Kirkwall, Lord Viscount, *Taplow-court, near Maidenhead*
Kay, Richard, Esq. *Manchester*
Keen, William Rivers, Esq. *Paradise-row, Lambeth*
Kelly, T. Esq. 17 *Paternoster-row*
Kemshead, Henry, Esq. *Westbourne-green*
Kendall, Edward Aug. Esq. F.S.A.
Kendrick, Dr. James, M.D. F.L.S. *Warrington*
Kennerley, Mr. T. jun. 19 *Great Russell-st. Covent-garden*

Kent, George Davies, Esq. *Corpus Christi College, Oxford*
Kent, William, Esq. *Clapton*
Kepp, Mr. Richard, 42 *Chandos-street, Covent-garden*
Kernot, Mr. James Harfield
Kerr, Charles, Esq. *King's-Arms Yard, Coleman-street*
Kerrick, Thomas, Esq. *Harlestone, Norfolk*
Kidder, Mr. John, 6 *Strand*
Kidman, John, Esq. *Racquet-court, Fleet-street*
Kinder, Mr. Charles 1 *Cheapside*
King, James, Esq. 4 *Tavistock-place*
King, Rev. Samuel, *Latimers, Bucks*
Kirkman, Joseph, Esq. 57 *Frith-street, Soho*
Knowlys, W. C. Esq. *Wood's Farm, near Slaugham, Sussex, and Mincing-lane*

L.

§ LANSDOWNE, Henry, Marquess of, F.R.S. 54 *Berkeley-sq. and Bowwood-park, Wilts*
** LIVERPOOL, Robert Banks, Earl of (V.P.) K.G. F.R.S. F.H.S. *Fife-house, Whitehall, Combe-house, Kingston, and Walmer-castle, Kent*
LOWTHER, William, Viscount, (V.P.) F.S.A. 2 *Spring-garden-terrace*
LUBBOCK, Sir John William, Bart. 24 *St. James's-place*
§ LAURENT, Sir Francis
Labalestrier, Mr. Francis, 10 *South-street, Grosvenor-square*
Laing, Mr. David, 10 *Villiers-street, Strand*
Lamb, Alexander, Esq. *(abroad)*
Lamb, George, Esq. 2 *James-street, Adelphi*
Lambert, James, Esq. 7 *Bedford-row*
Lambert, John, Esq. *America*
§ Lambton, John George, Esq. M.P. 15 *Cleveland-row*
Lancaster, Henry, Esq. 17 *New-street, Vincent-square*
Lane, Frederick, Esq. *Lynn, Norfolk*
Langdon, Mr. William, 28 *Great Russell-street*
§ Langridge, W. B. Esq. *Lewes, Sussex*
Langston, John Haughton, Esq. M.P. *Sanden, Oxfordshire, and* 143 *Piccadilly*
Lawford, James, Esq. *Stock Exchange*
Lawrance, Edward, Esq. 16 *Bucklersbury*
Lawrence W. E. Esq. 67 *Berners-street*
§ Lawson, Henry, Esq. *Hereford*
§ Lawson, Johnson, Esq. 9 *Orange-street, Bloomsbury*
Lea, B. Esq. *James-street, Clerkenwell*
Lea, Mr. William, *James-street, Clerkenwell*
Leadbeter, Mr. Richard, *Thompson's-terrace, Middleton-sq.*
§ Leader, Henry, Esq. 30 *Great St. Helen's*

Leaf, W. Esq. 39, *Old Change, and East Dulwich*
§ Leaf, W. jun. Esq. *Old Change, and Herne-hill*
Lee, James Prince, Esq. *Trinity College, Cambridge*
Lee, Henry, Esq. 13 *Finsbury-place*
Lee, Henry, jun. Esq. 30 *Chiswell-street*
Lee, J. Esq. 6 *Bishopsgate-street-within*
§ Lee, J. F. Esq. LL.D. *Doctors' Commons*
§ Lee, Stephen, Esq. 14 *Kensington-square*
§ Lee, Mr. William, 61 *Charing-cross*
Lees, William, Esq. *Ordnance-office, Tower*
Lefevre, Charles Shaw, Esq. *Whitehall-place*
Lefort, Mr. Col. *(abroad)*
§ Legh, John George, Esq. F.H.S. 32 *Brook-street, and High Leigh, Cheshire*
Leigh, James Heath, Esq. 6 *Lincoln's-inn New-square*
Le Mann, Frederick, Esq. 15 *Threadneedle-street*
Le Mesurier, John, Esq. *Alderney*
Letts, Thomas, Esq. 35 *Royal Exchange*
Lettsom, Samuel F. Esq.
Levien, Mr. M. *(abroad)*
§ Levien, Solomon, Esq.
Levitt, Mr. Lewis, 43 *Leadenhall-street*
Lewer, W. H. Esq. *(abroad)*
§ Lewis, Thomas, Esq.
Lewis, Mr. William, 76 *St. Martin's-lane*
§ Liddall, William, Esq. *Kildygrange, near Pickering, Yorkshire*
Liddiard, Mr. Gilbert, *Stepney*
Lincoln, Mr. Henry C. 196 *High Holborn*
Lincolne, Abraham, Esq. 33 *Highbury-place*
Lindo, I. Esq. *(abroad)*
Lister, Isaac Solly, Esq. 8 *Lincoln's-inn-fields*
Lloyd, Mr. Thomas, *Bartlett's-buildings, Holborn*
Lloyd, Mr. John, 77 *Snow-hill*
Lloyd, Mr. John, jun. *(abroad)*
§ Lloyd, William, Esq.
Lloyd, William, Esq. 140 *New Bond-street*
Loat, Mr. Samuel, 24 *Edward-square, Kensington*
Lockwood, Anthony, Esq. *Canada*
Long, Mr. Charles, *Buckingham-street, Strand*
Long, Mr. Richard, 217 *High Holborn*
Long, Walter, Esq. *Preshaw-house, Hants, and 52 Montague-square*
Lott, Mr. Henry, 63 *Long-acre*
§ Lott, T. Esq. 38 *Bow-lane, Cheapside*
Lovell, Mr. George, 3 *Wilmot-street, Brunswick-square*
Low, Mr. Robert, 330 *Strand*
Lowe, George, Esq. *Gas Company, Brick-lane*

Lowther, Mr. Thomas Nicholas, 58 *Red-Lion-street, Clerkenwell*
Luke, William, Esq. 89 *Newman-street*
Lund, Mr. Thomas, 57 *Cornhill*
Lumley, William, Esq. (Chairman of the Committee of Accounts) 1 *Sidmouth-place*

M.

* MACCLESFIELD, George, Earl of, F.R.S. F.H.S. 9 *Conduit-street, and Sherborne-castle, Oxfordshire*
MANSFIELD, Earl of, F.R.S. F.S.A. M.R.I. *Caen Wood, Middlesex*
§ MANVERS, Charles, Earl, 36 *Portman-square, and Thoresby Park, Notts*
§ MOUNTNORRIS, George, Earl of, F.R.S. F.S.A. F.L.S. *Arley-hall, near Bewdley.*
§ MONKTON, Hon. Edward 46, *Portland-place*
MACGREGOR, Sir Evan Murray, Bart. *Lenrick-castle, Perthshire*
§ MORGAN, Sir Charles, Bart. M.P. F.H.S. 70 *Pall Mall, and Tredegar-house, Monmouthshire*
MURRAY, the Hon. George, Major-general, 23 *Somerset-st. Portman-square*
§ Mac Adam, James, Esq. *Whitehall-place*
Mac Arthur, John, Esq. (Chairman of the Committee of Colonies and Trade), *Stone-buildings, Lincoln's-inn*
M'Cormick, William, Esq. 17 *Upper Gower-street*
§ Macgilray, Simon, Esq. *Suffolk-lane*
Machell, John, Esq. *Low Plains, near Penrith*
Mackenzie, Mr. John, 30 *Brydges-street, Covent-garden*
Mackintosh, Ewen, Esq. *Haymarket*
Macklew, Edward, Esq. 83 *Piccadilly*
Maclean, D. Esq.
Macpherson, Richard, Esq. 76 *Lombard-street*
Macqueen, Thomas Potter, Esq. M.P.
M'William, Robert, Esq. 6 *Furnival's-inn*
Magrath, Mr. Edward, 12 *Waterloo-place, Pall-Mall*
Mainwaring, Mr. John, *Chichester-rents, Lincoln's-inn*
Manwaring, Mr. William, *Marsh-place, Lambeth*
§ Maitland, Ebenezer Fuller, Esq. F.S.A. 11 *Bryanstone-sq.*
Mallcott, Mr. John, 12 *Newgate-street*
Malleson, Rev. I. P. B.A.
§ Manley, Admiral J. C. *Wallingford*
Mann, Mr. William Henry, 32 *Bucklersbury*
Manning, Mr. Richard, 11 *High-street, Borough*
Mansfield, James, Esq. *James-street, Bedford-row*

Maples, J. T. Capt. R.N. *Kilburn Priory*
Marreco, A. J. Freire, Esq. 26 *New Broad-street, and Cintra Cottage, Stoke Newington*
Marsack, Lieut.-Col. *Caversham-park, Reading*
Marsack, Edward Claude, Esq.
Marsden, Robert, Esq. 14 *Hanover-terrace, Regent's-park*
Marshal, Mr. John, 12 *Southampton-street, Strand*
§ Martin, Henry, Esq. *Ashfield-lodge, near Bury St. Edmund's*
§ Martin, John, Esq. M.P. *Lombard-street*
Martin, John, Esq. 30 *Alsop's-buildings*
Mason, J. F. Esq. *Aldenham-lodge, St. Alban's*
§ Mason, Mr. William, 22 *Castle-street, East, Oxford-street*
Matthews, Mr. Luke *(abroad)*
§ Maude, Thomas, Esq. 14 *Great George-street, Westminster*
Maudslay, Henry, Esq. *Cheltenham-place, Westminster-road*
Maudslay, Thomas, Esq. *Cheltenham-place, Westminster-road*
Mawley, Henry, Esq. 27 *Lower Thornhaugh-street*
§ Mayne, John Thomas, Esq. F.R.S. and F.S.A. *Teffont-house, Salisbury*
Medcalf, Robert, Esq. 109 *Chancery-lane*
Meheux, John, Esq. F.S.A. 52 *Hans-place, Sloane-street*
§ Menzies, John, Esq. *Pittfoddles, near Aberdeen*
Merle, Mr. J. G. 2 *Salisbury-street, Strand*
§ Merle, Wm. Henry, Esq. 9 *Park-street, Westminster*
Merrifield, John, Esq. 7 *King's-Bench-walk, Temple*
§ Meyer, C. P. Esq. *Enfield, Middlesex*
Middleton, Mr. James, 15 *Great St. Thomas Apostle*
Middleton, William, Esq. 3 *Adam-street, Adelphi*
Midgley, G. D. Esq. 49 *Strand*
Midgley, Mr. George Reuben, 49 *Strand*
Miers, Mr. John, *South America*
Mildred, Daniel, Esq. F.H.S. *Woodford*
Miller, Mr. George, 152 *Strand*
Miller, Giles, Esq. *Gouldhurst, Kent*
§ Miller, John, Esq.
Miller, Mr. J. H. 158 *Regent-street*
Milliken, Mr. J. 301 *Strand*
Millington, John, Esq. F.L.S. 36 *Bloomsbury-square*
§ Mills, Abraham, Esq. *Bodlandib, near Conway, Carnarvonshire*
Mills, Mr. John, 52 *Holywell-street*
Mills, Samuel, Esq. 20 *Russell-square*
Mills, T. Esq. 19 *Finsbury-place*
Mills, Mr. William, jun. 120 *High Holborn*
Minchin, Thomas, Esq. 3 *Verulam-buildings*
Minier, William, Esq. F.H.S. 3 *Adelphi-terrace*
§ Minshull, William, Esq. *Kentish Town*
Mitchell, Mr. William, *Tyne Mercury, Newcastle*

§ Mitford, George, M.D. *Bertram-house, Berks*
Molteno, Mr. J. A. 20 *Pall Mall*
Monro, Robert, Esq. *Busbridge-park, near Godalming*
Moody, James, Esq. 33 *Hunter-street, Brunswick-square*
Moore, Mr. C. *Commercial-road, Lambeth*
§ Moore, Daniel, Esq. (V.P.) F.R.S. F.S.A. F.L.S. V.P.R.S. 8 *Lincoln's-inn*
§ Moore, George, Esq. F.S.A. F.L.S. M.R.I. (Chairman of the Committee of Correspondence and Papers) *Gate-street, Lincoln's-inn-fields*
Moore, Henry Glover, Esq.
Moore, Peter, Esq. 18 *Edward-street, Portman-square*
Moore, Thomas, Esq. F.S.A. *Hendon, and 2 York-terrace, Regent's-park*
Moorman, Mr. Thomas, 16 *Old-street*
Morant, George, Esq. 95 *Wimpole-street, Cavendish-square*
Mordan, Mr. Sampson, *Castle-street, City-road*
Morel, Dominique, Esq. 2 *Golden-square*
Morgan, Thomas, Esq. 13 *Savage-gardens*
Morris, Charles, Esq. 10 *Portman-square*
Morris, Joseph, Esq. 24 *Northumberland-street*
§ Morrison, James, Esq. *Balham-hill*
Morson, Mr. Thomas, *Southampton-row, Russell-square*
Mott, Mr. George, 20 *Essex-street, Strand*
Mount, Richard, Esq. *Laytonstone*
Mudford, William, Esq. 7 *Charlotte-street, Bloomsbury*
Mudge, Richard, Captain Royal Engineers, *Tower*
Munday, George, Esq. *Old Ford, Middlesex*
Murray, James, Captain R.N. 35 *Soho-square*
Murray, John, Esq. *Albemarle-street*
§ Myers, Thomas, Esq. 4 *Tilney-street, May-fair*

N.

§ Norfolk, Bernard Edward, Duke of, F.R.S. F.S.A. F.H.S. *St. James's-square, and Arundel-castle, Sussex*
** Northumberland, Hugh, Duke of, (V.P.) K.G. F.R.S. F.S.A. *Northumberland-house, Charing-cross, Sion-house, Middlesex, and Alnwick-castle, Northumberland*
Northampton, Charles, Marquis of, F.S.A *Castle Ashby, Northampton*
Northesk, William, Earl of, *Rose-hill, Winchester*
Naylor, Thomas, Esq. *Newport-street*
Nelson, John Wood, Esq. 37 *Mecklenburgh-square*
Newbery, George John, Esq. 54 *Upper Mary-le-bone-street*
Newcomb, William, Esq. 190 *Fleet-street*
Newsom, Mr. Jos. Wm. Percy, 4 *Savage-gardens*
Newton, Alexander L. Esq. 4 *Bury-street, St. Mary Axe*

§ Newton, Andrew, Esq.
Newton, Mr. William, 66 *Chancery-lane*
Newton, Mr. William, 12 *St. Paul's Church-yard*
Newton, Mr. William, jun. 228 *Piccadilly*
Neyva, Joseph da Cunha Pereira
Niblet, John, Esq.
Nichols, Mr. Nathaniel, *Bethlem Hospital*
Nickisson, Mr. H. *Ashby-street, Northampton-square*
Nicol, George, Esq. 51 *Pall Mall*
Nicol, Robert, Esq. 16 *Sidmouth-street*
Nimmo, A. Esq. *Dublin*
Noble, Mr. 26 *Ivy-lane*
Noble, E. M. Esq. *Great Surrey-street, Blackfriars*
Nockolds, Martin, Esq. *Wood-house, Stanstead, near Bishop Stortford*
Nonnen, John, Esq. F.H.S. *Gottenburg*
§ Norris, John, Esq. *Hughenden-house, High Wycomb, Bucks*
Northall, Mr. W. K. *Wolverhampton*
Nowell, Alexander, Esq. *Underley Park, near Kirby Lonsdale, and* 43 *Wimpole-street*
Noyes, Charles, Esq. *Board of Trade, Whitehall*
Nugent, Mr. T. V. 9 *Hart-street, Bloomsbury*
Nurse, William Mountford, Esq. *Cumberland-terrace, Regent's-park*

O.

Ommanney, Sir Francis, M.P. 21 *Norfolk-street, Strand*
Oakes, Miss S. H. *Mitcham, Surrey*
§ Oakly, Benj. Esq. F.H.S. 1 *North-side Royal Exchange*
O'Bryen, Dennis, Esq. *Craven-street*
O'Connell, M. D. Esq. *Merrion-square, Dublin*
Ody, Mr. John, 292 *Strand*
Ogle, John, Esq. *Temple-cottage, Chelsea*
O'Kelly, Colonel
§ Olive, Jeremiah, Esq. 4 *York-terrace, Regent's-park*
Orlando, John, Deputy from Greece, &c. &c. &c. 29 *Sackville-street, Piccadilly*
Owen, Mr. Thomas, 21 *Great Russell-street, Covent-garden*

P.

§ Portland, William Hen. Duke of, F.R.S. & S.A. *Harcourt-house, Cavendish-square, and Bolsover-castle, Derby*
** Prudhoe, Algernon, Lord, F.R.S. *(abroad)*
Peel, Right Hon. Robert, M.P. *Whitehall*
* Peel, Sir Robert, Bart. *Drayton-park, Tamworth*
Philippart, Sir John, K.G.V. K.P.S. M.R.I.A. M.R.A.S. 36 *St. James's-street*

PRESCOTT, Sir George, Bart. *Theobald's-park, Herts.*
* PUSEY, Hon. Philip, 35 *Grosvenor-square*
Packer, William, Esq. *Great Baddow, Essex*
§ Page, Frederick, *Newbery, Berks*
Paget, John Warren, Esq. 5, *Quality-court, Chancery-lane*
Palmer, H. R. Esq. *Engineer's-office, London-docks*
Palmer, William Henry, Esq. 24 *Bedford-row*
Palmer, George Holworthy, Esq. *Royal Mint*
Parke, Henry, Esq. 90 *Dean-street, Soho*
Papworth, John, Esq. 11 *Caroline-street, Bedford-square*
Parker, Mr. J. C. 25 *Whitcomb-street*
Parker, Mr. Samuel, jun. 35 *Argyll-street*
Parker, Samuel, Esq. *Redruth, Cornwall*
Parker, Thomas, Esq. 37 *Berners-street*
Parker, Thomas, Esq. *King's Mews, Pimlico*
Parker, Mr. William, 19 *North-bank, Regent's-park*
Parkes, Josiah, Esq. *Warwick*
Parkin, Mr. Richard, 40 *Bedford-street, Strand*
Parkins, William, Esq. *Adelphi Wharf*
Parminter, George, Esq.
Pater, Mr. William, *Hammersmith*
Pattisall, Stephen, Esq. *Change-alley*
Payne, Joseph, Esq. *Clifford's-inn*
§ Paynter, John, Esq. 64 *Coleman-street*
Peachey, General, *Yarmouth, Hants*
§ Peacock, Mr. William, 18 *Salisbury-square*
Pearsall, James, Esq. 145 *Cheapside*
Pearson, Rev. William, LL.D. & F.R.S. 6 *Compton-terrace, Islington*
Pechell, John, Esq. Captain, R.N.
Peel, Jonathan, Esq. *Acrinton, Lancashire*
Pellat, Apsley, jun. Esq. 16 *St. Paul's Church-yard*
Penn, John, Esq. F.H.S. 10 *New-street, Spring-gardens, and Stoke-park, Buckinghamshire*
Penn, Richard, Esq. *Secretary of State's Office, or 5 Great George-street, Westminster*
Pennington, Mr. *Camberwell*
§ Pepys, John, Esq. 8 *Lower Berkeley-street*
Pepys, William H. Esq. F.R.S. F.H.S. 24 *Poultry*
§ Percival, Richard, jun. Esq. F.S.A. 76 *Lombard-street*
Perigal, Henry, Esq. *Canterbury-row, Newington Butts*
§ Perin, W. P. Esq. F.R.S. F.S.A.
Perring, Richard, Esq. *Devonport, Devon*
Perkins, Mr. Angier March, 69 *Fleet-street*
Perkins, Jacob, Esq. 69 *Fleet-street*
Perry, Mr. Ebenezer, 39 *Spencer-street, Northampton-square*
§ Perry, Philip, Esq. 50 *Upper Harley-street*
§ Petit, Louis Hayes, Esq. F.R.S. F.S.A. F.L.S. 9 *Linc.-inn*

Peto, Henry, Esq. 31 *Little Britain*
§ Pettiward, Roger, Esq. F.R.S. F.S.A. F.L.S. F.H.S. 127 *Park-street, Grosvenor-square*
Peyton, Richard, Esq. 10 *Cook's-court, Carey-street, Lincoln's-inn*
Pfeiffer, Andrew, Esq. 5 *Woburn-place*
Pfeil, Adolphus Leopold, Esq. *Broad-street, Bloomsbury*
Phillips, Charles, Capt. R.N.
Phillips, Mr. John, 4 *Bishopsgate-street-within*
§ Phillips, William, Esq. 31 *Cavendish-square*
Phillipps, Mr. Leonard, jun. *Wandsworth-road, near Vauxhall*
Phipps, John, Esq. 19 *Buckingham-street, Strand*
Pillar, James, Esq. 13 *Moor-place, Lambeth*
§ Pincent, Joseph, Esq.
Pindar, W. M. Esq. *West Indies*
Pinkett, Edward, Esq. *Trinity Hall, Cambridge*
Piper, Mr. Thomas, 42 *Little Eastcheap*
Pitcher, Henry Jones, Esq. *Rookery, Northfleet, Kent*
§ Pitt, Thomas, Esq. F.S.A. F.H.S. 41 *Wimpole-street*
Pix, Thomas, Esq. *Peasmarsh, Sussex*
Planta, Joseph, Esq. F.R.S. *British Museum*
Platt, James, Esq. 11 *Boswell-court*
Platt, Mr. Samuel, 3 *Castle-street, Regent-street*
Plumptre, E. H. Esq. 4 *Lamb's-buildings, Temple*
§ Pocknell, Thomas, Esq. *Greenwich, and* 16 *Cornhill*
Poland, Mr. P. 351 *Strand*
Poland, William Henry, Esq. 21 *Bow-lane, Cheapside*
Polhill, Edward, jun. 30 *York-place, Portman-square*
Polhill, J. Esq. 10 *Cavendish-square*
§ Pollock, David, Esq. (V.P.) M.R.A.S. M.R.S.L. 40 *Lincoln's-inn-fields*
Poole, Moses, Esq. *Patent-office,* 4 *Old-square, Lincoln's-inn*
Povah, Mr. John, 39 *Red-Lion-street, Holborn*
Pouchee, Mr. L. J. 2 *Little Queen-st. Lincoln's-inn-fields*
Pourcin, Joseph, Esq.
Powell, John C, Esq. 18 *Little St. Helen's-place*
§ Powell, Richard, M.D. F.S.A.
§ Powell, Richard Jones, Esq. *Hinton-Court, near Hereford*
§ Prado, Samuel, Esq. 21 *Grafton-street, Bond-street*
Pratt, Edward Roger, Esq. *Royston House, Norfolk*
Preston, Richard, Esq. 6 *New-square, Lincoln's-inn*
Preston, Thomas, Esq. 19 *Nottingham-place*
Price, Mr. Charles, 221 *Strand*
Price, Henry H. Esq. *Neath Abbey, South Wales*
Price, Mr. Frederick, 135 *Aldersgate-street*
Prickett, George, Esq. 5 *Seymour-place, Euston-square*
Prior, Edward, Esq. *Great Winchester-street, Old Broad-st.*

Prosser, Mr. John, 9 *Charing-cross*
Provis, Mr. W. A. 14 *Stamford-street, Blackfriars*
Pryor, Mr. William Squire, 23 *Broad-street-buildings*
Pullen, John, jun. Esq. 34 *Fore-street, Cripplegate*
Pye, John, Esq. 42 *Cirencester-place, Fitzroy-square*

Q.

Quick, Mr. Samuel, 29 *York-street, Portman-square*
Quin, Edward, Esq. A.M. (Chairman of the Committee of Polite Arts), 3 *Hare-court, Temple*

R.

** RADNOR, Jacob, Earl of, (V.P.) M.A. F.R.S. F.S.A. 52 *Lower Grosvenor-street, and Longford-castle, near Salisbury*
§ ROMNEY, Charles, Earl of, (V.P.) F.R.S. *Mote-park, Kent*
§ RADCLYFFE, Sir Joseph, Bart. *Campsall-park, Doncaster*
§ RAWLINS, Sir William, 44 *Liverpool-street, New Broad-st.*
Rainbow, Mr. Joseph M. 35 *Cannon-street*
Rainer, Peter, Esq. *Albany*
Rainy, Alexander, Esq. 8 *Berkeley-square*
Rainy, Mr. George
§ Ramey, John, Esq. *Ormsby, Norfolk*
Ramsden, Mr. Richard, 7 *Brook-street, Holborn*
Ramshaw, Mr. James, 33 *Fetter-lane*
§ Randell, George, Esq. *Bagnigge Wells*
Read, Mr. William, 37 *King-street, Covent-garden*
Rees, Mr. John
Reeves, John, Esq. F.R.S. F.S.A. *Parliament-place*
Reeves, John, Esq. F.R.S. F.L.S. *Canton*
Reeves, J. R. Esq. *Peckham, Surrey*
Reid, John, Esq. 26 *Aldersgate-street*
Reid, Mr. J. *Walnut-tree-walk, Lambeth*
Reid, Thomas, Esq. *Edinburgh*
Rentzsch, Mr. Sigismund, *George-street, St. James's-square*
§ Reveley, George, Esq. 21 *New Ormond-street*
§ Reveley, George Johnson, Esq. 21 *New Ormond-street*
§ Reveley, William Austin, Esq. 21 *New Ormond-street*
§ Reveley, Henry Willey, Esq. *Cape of Good Hope*
Reynolds, C. E. Esq. 96 *St. John-street*
Reynolds, Samuel, Esq. *Bayswater*
Rhodes, Henry, Esq. 26 *Mortimer-street, Cavendish-square*
Rich, Robert, Esq. *Dockhead*
Richardson, Mr. Edward, jun. *Fenchurch-buildings, Fenchurch-street*

Richardson, Mr. Philetus, *Brewery, Chiswell-street*
§ Richardson, William Henry, Esq. 72 *Great Portland-street*
Richman, Mr. Edmund Charles, *Regent-street, Westminster*
Richman, Mr. Francis, *Regent-street, Westminster*
Ricketts, Mr. Charles, *Castle-court, Strand*
§ Rigaud, S. Esq. M.A. F.R.S. Fellow of Exeter College, Oxford, *Richmond*
Rigby, Mr. James, 8 *Charing-cross*
Rigby, Mr. Joshua, *Westham*
§ Ring, Thomas, Esq. *Reading*
Risden, J. Esq. 5 *Lansdown-place*
Rivington, John, Esq. 62 *St. Paul's Church-yard*
Robarts, Mr. Henry, 23 *Bedford-street, Strand*
Robarts, Nathaniel, Esq. *Lavender-hill, Clapham-rise*
Roberts, Thomas, Esq. *Brook-house, Chester*
Robertson, Mr. Charles John, *Little Chiswick*
§ Robins, Greenway, Esq. 1 *Crosby-row, Walworth*
§ Robinson, Charles, Esq. 36 *Highbury-place*
Robinson, David, Esq. Professor of Fortification, *Royal Academy, Woolwich*
Robinson, John Henry, Esq. 24 *Mornington-place*
Robinson, John, Esq. 9 *Belmont-place, Vauxhall*
Robinson, Joseph Ogle, Esq. *Clapham-common*
Robinson, Mr. Joshua, *Paddington*
Robinson, W. T. Esq. 6 *Austin-friars*
Robson, Mr. John, 2 *Great Marlborough-street*
Rodger, Mr. William, Lieut. R.N.
§ Rogers, Edward, Esq. M.P. 17 *Regent-street*
§ Roget, P. M. M.D. F.R.S, 39 *Bernard-street*
Ronalds, Francis, Esq. *Croydon, Surrey*
Rooke, Mr. C. A. 25 *Little St. Andrew's-street*
Rooke, W. B. Esq.
Roscoe, William, Esq. F.L.S. *Liverpool*
Rose, Mr. John, 4 *Newcastle-street, Strand*
Rotch, Benjamin, Esq. 1 *Furnival's-inn*
Rothwell, Mr. 2 *Upper Thornhaugh-street*
Rowe, J. P. Esq. *New River-head*
Rowed, Henry, Esq. *Belgrave-place, Pimlico*
§ Royds, John, Esq. 107 *Gloucester-place*
Ruck, John, Esq. 19 *St. Dunstan's-hill*
Runnington, James, Esq. *Hillsborough, Yorkshire*
§ Rush, George, Esq. *Elsingham-hall, Bishop's Stortford*
§ Russel, J. Watts, Esq. M.P. F.R.S. F.S.A.
Russell, Mr. Thomas, *Ironmonger-lane*
Rutt, Mr. William, *Hackney*
Ryde, Henry Thomas, Esq.

S.

§ SUSSEX, His Royal Highness, the Duke of, K.G. &c. (PRESIDENT), *Kensington Palace*
** STAFFORD, George, Marquis of, (V.P.) K.G. *Cleveland-house, and Trentham-hall, Stafford*
SUFFIELD, Lord, *Vernon-house, Park-place*
SIMPSON, the Hon. J. B.
§ ST. AUBYN, Sir John, Bart. F.R.S. F.S.A. F.L.S.
SHUCKBURGH, Sir Francis, Bart. F.R.S. *Pavillion, Hans-place, and Shuckburgh-park, Warwickshire*
§ SMITH, Sir W. S. K.C.B. K.C. K.F. F.R S. F.S.A.
STIRLING, Sir Walter, Bart. F.R.S. F.S.A.
§ SMART, Sir George, 91 *Great Portland-street*
Sangster, Mr. Samuel, 94 *Fleet-street*
Sass, Henry, Esq. 6 *Charlotte-street, Bloomsbury*
Satchwell, George, Esq. *Ordnance-office, Pall Mall*
Saunders, James Ebenezer, Esq. *Lawrence Pountney-lane*
§ Saunders, John, Esq. 57 *Cannon-street*
§ Saunders, Thomas, Esq. *New Park-street, Bankside*
Savage, James, Esq. (Chairman of the Committee of Miscellaneous Matters), 31 *Essex-street, Strand*
Savory, Thomas, Esq. 136 *New Bond-street*
Sawyer, Robert H. Esq. 2 *Staples-inn*
Schmalcalder, Mr. Charles, *Strand*
Schmidt, Mr. George Frederick, 36 *Great Russell-street, Bloomsbury*
Scholey, George, Esq. Alderman, *Old Swan-stairs*
Scoles, Joseph John, Esq. 12 *Regent-street*
Scott, Henry D. Esq. 6 *Fludyer-street*
Scott, Robert, Esq. *Stockwell*
Seabrook, Mr. Isaac, 78 *Hatton-garden*
Seale, Gregory, Esq.
Seally, Henry, Esq. *East-India House*
Seibe, Mr. Augustus, 20 *Princes-street, Commercial-road*
§ Selby, Henry C. Esq. 4 *Verulam-buildings*
Sellon, Mr. John, *(abroad)*
Serancke, Francis, Esq. *St. Alban's*
§ Sex, Edward, Esq. *Stock Exchange*
§ Seymour, William, Esq. 19 *Margaret-street, Cavendish-sq.*
Shand, Mr. W. *Buckingham-street, Strand*
Sharpe, J. B. Esq.
Shaw, Benjamin, Esq. *Newman's-court, Cornhill*
Shaw, John, Esq. 4 *King-street, Cheapside*
Shaw, Samuel, Esq. *Brunswick-square*
Shawe, Capt. F. 48 *Park-street, Grosvenor-square*
Shears, Mr. Daniel, *Bankside*
Sheldrake, Mr. William, 483 *Strand*

Shelton, Mr. H. Chawner
Sheppard, Thomas, Esq. *Hampstead-heath*
Shirley, T. Esq. 5 *Chatham-place*
§ Shore, Offley, Esq. *Norton, Derbyshire*
§ Shore, Samuel, Esq. *Meersbrook, Derbyshire*
§ Shore, Samuel, jun. Esq. *Norton-hall, Derbyshire*
§ Shore, Sidney, Esq. *Sherwood-hall, Notts*
Shuldham, M. Lieut. R.N. 2 *Brunswick-cottages, Lewisham-road, near Deptford*
§ Shuter, T. Allen, Esq. *St. John's, Southwark*
Sich, Henry, Esq. *Chiswick*
Sidney, R. C. Esq. 5 *Mortimer-street*
Silk, Mr. Robert, *Long Acre*
Silvester, Mr. Richard William, 27 *Strand*
Simmons, William, Esq. *Wales*
Simms, William, Esq. 136 *Fleet-street*
Simpkin, William, Esq. 83 *Great Surrey-street*
Simpson, William, Esq. 15 *Nottingham-pl. Mary-le-bonne*
Sims, William, Esq. 31 *Newman-street*
Sinclair, John, Esq. *Huntshill, Warwickshire*
Singleton, Henry, Esq. 21 *Piazza, Charles-st. St. James's*
Skegg, Mr. Edward, *John-street, Adelphi*
Skegg, Mr. Edward, jun. *John-street, Adelphi*
Skelton, Mr. Douglas, *Wadebridge, near Bodmyn, Cornwall*
Skelton, W. Esq. *Stafford-place, Pimlico*
Sketchley, S. E. Esq. 21 *Lower Phillimore-pl. Kensington*
Skinner, Mr. William, 101 *High Holborn*
Skynner, John, Esq. 4 *Lincoln's-inn*
Slade, Mr. John, 57 *Hatton-garden*
Slade, J. M. Esq. *Chatham*
Sloper, Mr. John, 15 *Pall Mall*
Smallbones, Mr. George, *Bath-place, New-road*
§ Smart, George, Esq. *Pedlar's-acre*
§ Smart, Mr. John
Smart, John, Esq. 7 *Milk-street, Cheapside*
Smart, William Thomas, Esq. 7 *Milk-street, Cheapside*
Smee, Mr. William, jun. *Pavement, Moorfields*
Smirnove, Rev. James, 32 *Wellbeck-street*
Smith, C. Esq. *Preston, Ferrybridge*
§ Smith, Mr. C. H. *Portland-road*
Smith, Charles Josephus, Esq. *Little Preston, Ferrybridge*
Smith, Mr. Henry Gilbert, *(abroad)*
§ Smith, James Scott, Esq. *Whitechapel Distillery*
§ Smith, John, Esq. *Revel-end, Herts, and* 41 *Bedford-row*
§ Smith, John Spencer, Esq. LL.D. F.R.S. F.S.A.
Smith, Mr. J. 34 *Trinity-square*
Smith, Mr. J. C.
Smith, Robert, Esq. *Aberavon Iron-works, Glamorganshire*

Smith, Robert, Esq. F.R.S. F.S.A. 18 *Austin-friars*
§ Smith, Robert Peter, Esq.
Smith, Thomas, Esq. 45 *Camden-street, Camden-town*
Smith, Thomas, Esq. *British Museum*
Smith, Walker, Esq. *Little Preston, Ferrybridge*
§ Snodgrass, Thomas, Esq. M.R.I. 10 *Chesterfield-street, May-fair*
Snow, Mr. John Row, 24 *Princes-street, Leicester-square*
§ Solly, Richard Horsman, Esq. F.R.S. F.S.A. F.H.S. M.R.I. (Chairman of the Committee of Correspondence and Papers), 48 *Great Ormond-street*
§ Solly, Isaac, Esq. *St. Mary-axe*
§ Solly, Thomas, Esq. *St. Mary Axe*
Sotheby, Mr. Samuel, 3 *Wellington-street, Strand*
Southgate, Mr. Samuel, *Gate-street, Lincoln's-inn-fields*
Soulsby, Mr. John, *Milford-lane, Strand*
Sowerby, James, Esq. 7 *Birchin-lane*
Sparks, Mr. Jonathan, 483 *Strand*
Speer, Edward, Esq.
Spilsbury, Francis Gybbon, Esq. *Leek, Staffordshire*
Splitgerber, J. C. Esq. *(abroad)*
Spring, Mr. William, 83 *Great Portland-street*
§ Spurrier, Isaac, Esq.
Stables, David Henry, Esq. 7 *Hatton-garden*
Stagg, Robert, Esq. *Middleton-house, Teesdale*
Stallard, Samuel F. Esq. 40 *Burton-crescent*
Stanborough, Charles, Esq. *Isleworth*
Staples, Samuel, Esq. 1 *Staples-inn*
§ Stapylton, M. Esq. *Myton-hall, Boroughbridge*
§ Staunton, Mr. M. jun. *Strand*
Steele, Alex. Esq.
Stephens, Mr. Benjamin, *Serle's-place, Carey-street*
Stephens, James, Esq. *Camerton-house, near Bath*
§ Stephenson, Rowland, Esq. *Farley-hill, Berks*
Stephenson, Rowland, Esq. *Marshall's, near Romford*
Stevens, Mr. Thomas, jun. *Drury-lane*
Stodart, Mr. Adam, *Clapton*
Stone, Mr. James, 18 *Warwick-street, Golden-square*
Storey, Mr. W. jun. *Mount-street, Grosvenor-square*
Storr, P. Esq. *Harrison-street, Gray's-inn-road*
Strutt, G. B. Esq. *Derby*
Strutt, Joseph, Esq. *Derby*
Strutt, William, Esq. *Derby*
Stuart, Mr. Charles, *Consol-office, Bank*
Stubbs, Mr. Francis Perry, 50 *Long-acre*
Stuckey, Benjamin, Esq. *St. Petersburgh*
Sturch, William, Esq. 21 *York-terrace, Regent's-park*
Sturgis, Samuel, Esq. 33 *Lincoln's-inn-fields*

Sumerfield, Thomas, B. Esq. *Vauxhall*
§ Sutton, Robert, Esq. 7 *Castle-alley, Cornhill*
Sweet, S. W. Esq. *Basinghall-street*
Swift, Mr. Edward, *Walsall, Staffordshire*
Swinney, Mr. Francis, 13 *Hyde-street, Bloomsbury*
Sykes, Godfrey, Esq. 7 *Powis-place, Ormond-street*
Symmons, Mr. Henry, *Great Peter-street, Westminster*
Symmons, J. Esq. F.R.S. F.S.A. F.L.S. *Paddington-house*
Syms, Frederick George, Esq. *Craven-street*

T.

§ Talbot, Thos. Mansfield, Esq. *Penric-castle, Glamorganshire*
Tapster, Mr. Thomas, *the Quadrant, Regent-street*
Tatham, Thomas James, Esq. 27 *Bedford-place*
Taylor, George, Esq. *Scotland-yard*
Taylor, George L. Esq. 9 *Spring-gardens*
Taylor, Mr. James
Taylor, James William, Esq. *East-Indies*
§ Taylor, John, Esq. 11 *St. George's-place, Hyde-park-corner*
Taylor, John, Esq. 12 *Bedford-row*
Taylor, Philip, Esq. *City-road*
Taylor, Samuel, Esq. *Morton, near Manchester*
Taylor, Mr. W. G. 12 *Old Jewry*
Taylor, Mr. John, *Queen-street, Westminster*
Tebbs, George, Esq. 163 *Old Bond-street*
Telford, Thomas, Esq. 24 *Abingdon-street*
§ Templer, James, Esq. *Stover-lodge, Devon*
Tennant, Christopher, Esq. *Lloyd's Coffee-house*
Tennant, George, Esq. 62 *Russell-square*
§ Tennant, James, Esq. *Russell-place, Fitzroy-square, and Stanmore, Middlesex*
Tennyson, Charles, Esq. M.P. 4 *Park-street, Westminster*
Terry, Mr. Thomas Leighton, 87 *Cornhill*
Test, Thomas, Esq. 7 *Leicester-place*
Thatcher, Mr. John George, *Dartmouth-street, Westminster*
Thomas, H. L. Esq. F.R.S. 12 *Leicester-place*
Thomas, William B. Esq. *Chesterfield, Derby*
Thomas, Israel, Esq. 20 *Cornhill*
Thompson, John, Esq. *Duke-street, York-buildings*
Thompson, John, Esq. 65 *St. Paul's Church-yard*
Thompson, Mr. John Thomas, 116 *Long-acre*
§ Thompson, Nathaniel, Esq. *Holloway*
Thompson, Richard, Esq.
Thompson, Mr. Robert, 6 *Canonbury-lane, Islington*
§ Thompson, R. G. Esq. *Kirby-hall, near Boroughbridge*
§ Thornton, Louis Edmund, Esq. F.L.S. 91 *Norton-street, Fitzroy-square*

§ Thornton, Sam, Esq. M.P. F.A.S. 205 *Regent-street*
Thornton, Stephen, Esq. 10 *Harley-street*
Thorold, Richard, Esq. *Weelsby, Lincolnshire*
Thorpe, George T. Esq. *Pay Office, Whitehall*
Thoyts, William, Esq. *Southampstead, Berks*
Thurston, Mr. J. *Catherine-street, Strand*
Till, Richard, Esq. 18 *Aldermanbury*
§ Todd, James Ruddell, Esq. 11 *John-street, Adelphi*
Todd, John Edward, Esq. 36 *Bedford-place*
Todd, Thomas, Esq. 6 *Lancaster-place*
§ Tomlinson, George, Esq. 7 *Copthall-court*
Tomlinson, N. Captain R.N. 36 *Dorset-sq. Regent's-park*
Tooke, Thos. Esq. F.R.S. 7 *Richmond-terrace, Whitehall*
§ Tooke, William, Esq. (V.P.) F.R.S. 12 *Russell-square*
Tredgold, Thomas, Esq. 16 *Grove-place Lisson-grove*
Trery, William, Esq. 8 *Church-street, Lambeth*
Tribe, Mr. J. *Chatham, Kent*
Triscott, Sam. jun. Esq. *Island of Ascension*
Trotter, Alexander, Esq. 34 *Bruton-street, Berkeley-square*
Trotter, John, jun. Esq.
Trotter, John, jun. Esq. Lieutenant 2nd Life Guards, 13 *Connaught-place, Hyde Park*
Truman, Mr. Henry, *Gas-works, Horseferry-road*
Tuck, Mr. Robert
§ Tunstall, Marmaduke, Esq. F.R.S. F.S.A. *Wycliffe, Yorkshire*
Turner, Frederick, Esq. 5 *Bloomsbury-square*
Turpin, James, Esq. *Commercial-road, Lambeth*
* Turton, Edmund, Esq. M.P. *Brasted-place, Kent*
Twining, George, Esq. (Chairman of the Committee of Colonies and Trade), *Strand*
Twining, Richard, Esq. 34 *Norfolk-street*

U.

Underwood, Mr. Henry
§ Uwins, Thomas, Esq. *Edinburgh*

V.

§ Vernon, the Hon. G. *Sudbury Hall, Derbyshire*
Vacher, Mr. T. B. 29 *Parliament-street*
Valle, Anthony Barto, Esq. 21 *Haymarket*
§ Valpy, Rev. Richard, D.D. F.S.A. *Reading, Berks*
Varley, Mr. Cornelius, 46 *Holywell-street, Milbank*
Vaughan, Petty, Esq. 70 *Fenchurch-street*
Vaughan, Wm. Esq. F.R.S. 70 *Fenchurch-street*
Venables, William, Esq. (Alderman) *Queenhithe*

Vendramini, John, Esq. 14 *Brompton-row*
Verrall, Richard, Esq. 10 *Harcourt-buildings, Temple*
Villette, Mr. Gysbert, *Apothecaries'-hall*
Vincent, George, Esq.
Vine, James, Esq. 8 *Grenville-street, Brunswick-square*
Virtue, Mr. George, 26 *Ivy-lane*
Vulliamy, B. L. Esq. 74 *Pall-Mall*

W.

WATERPARK, Richard, Lord, F.S.A. *Doveridge, Uttoxeter, Staffordshire*
§ WILLOUGHBY DE BROKE, Henry, Lord, 21 *Hill-street, Berkeley-square*
WEBB, Sir John, Bart. F.R.S. F.S.A.
WYNNE, Sir Watkin W. Bart. M.P. F.R.S. F.H.S. *St. James's-square, and Wynnstay*
WILSON, Sir Henry Wright, *Chelsea*
WYNNE, Sir Wm. *Bath*
§ WALKER, Sir Patrick *Edinburgh*
Wagner, Mr. Charles *(abroad)*
Wainewright, Robert, Esq. 3 *Gray's-inn-square*
Wakeford, William, Esq. *Andover*
Walker, James, Esq. *Limehouse*
Walker, Mr. James, *William-street, Bridge-street, Blackfriars*
§ Walker, Thomas, Esq. *Bury-hill, Notts*
Walker, Thomas, Esq. 4 *John-street, Bedford-row*
Walker, William, Esq. *Stamford-hill*
Walker, William Jackson, Esq. *Bow-lane Cottage, near Poplar*
Wallen, John, Esq. 10 *White-Lion-street, Spitalfields*
Wallen, Mr. William, 45 *Gutter-lane*
Wallis, John, Esq. *Bodmin, Cornwall*
§ Walshman, Thomas, M.D. *Kennington*
Walter, John, Esq. 4 *Symond's-inn*
Walter, Mr. John, jun. *(abroad)*
Walther, Mr. Henry, 77 *Lower Sloane-street*
Warcup, Mr. William
Ward, John, Esq. 1 *Ludgate-street*
Ward, John, Esq. *Horncastle, Lincolnshire*
§ Ward, Wm. Esq. *Albany, and Trinity College, Cambridge*
Ware, Samuel, Esq. F.S.A. 5 *John-street, Adelphi*
Ware, John Pardon, Esq. 43 *Blackman-street, Borough*
Warne, Mr. William, *Edward-street, Hampstead-road*
Warren, Mr. Ambrose, 10 *Chad's-row, Gray's-inn-road*
Warren, Mr. William, *Isleworth*

Wass, Rev. William, *Darton Vicarage, near Bewdley, Yorkshire*
Watson, John, Esq. *Preston, Lancashire*
Watson, W. H. Esq. *Whitchurch, Salop*
Watson, Thomas, Esq. *Aldermanbury*
Watts, Thomas, Esq. *Bartholomew Hospital*
Waymouth, Henry, Esq. 17 *Bryanstone-square*
Weatherby, Edward, Esq. *Newmarket*
§ Webb, Frederick, Esq.
Webb, Mr. George, 13 *Surrey-square*
Webb, John W. Esq.
§ Wedgwood, John, Esq. F.L.S. F.H.S. *Betley, Staffordshire*
Welland, Abm. Esq. *Southborough-lodge, Bromley, Kent*
§ Weldon, Walter, Esq. 97 *New Bond-street*
§ Wells, Mr. Jonah Smith, jun. 40 *Lothbury*
§ Wenham, Thomas, Esq.
West, F. T. Esq. *Brixton-hill, Surrey*
Western, Charles C. Esq. M.P. *Felix Hall, Keveldon, Essex*
Westley, Mr. Francis, *Friar's-street, Blackfriars*
Weston, Mr. John, 37 *Old Bond-street*
Weston, Mr. Thomas, 14 *South-street, Park-lane*
Weston, Miles, Esq. 10 *Gloucester-place, New-road*
Wheatstone, Mr. C. 436 *Strand*
Wheeler, Mr. John, *St. Bartholomew's Hospital*
Whipple, Mr. George, 38 *Richard-street, Liverpool-road, Islington*
White, Mr. Edward, 9 *Greek-street, Soho*
White, H. C. Esq. *Cannon-row, Westminster*
White, John, Esq. F.H.S. *Cannon-row, Westminster, and Westbourne-green*
White, John, Esq. 20 *Charlotte-street, Bloomsbury*
White, Mr. Jonas, *Imperial Hotel, Covent-garden*
White, Mr. William, *Alfred-place, Finsbury*
§ White, William Arch. Armstrong, Esq. *College-street, Westminster*
Whitehead, John, Esq. *Bankside*
Whitehead, Henry, Esq. *Little Cadogan-place*
Whitehead, William, Esq. *Little Cadogan-place*
Whitehurst, Charles Howard, Esq. 4 *Elm-court, Temple*
Whitlaw, Mr. Charles, 14 *Finsbury-place, South*
Whittaker, George, Esq. *Ave-Maria-lane*
Whitton, W. R. Esq. *Whallon, Manchester*
§ Wigg, Francis, Esq. 11 *North-place, Gray's-inn-lane*
Wiggins, Matthew, Esq. *Bury-house, Richmansworth, and* 130 *Piccadilly*
Wilberforce, William, Esq. *Hendon, Middlesex*
Willcox, F. Esq. *Slough, Bucks*
Wild, John, Esq. 7 *Martin's-lane, Cannon-street*

Wild, Thomas, Esq. 68 *Torrington-square*
Wilde, Thomas, Esq. 69 *Guildford-street*
Wildman, Colonel Thomas, *Newstead Abbey, Notts*
Wilkinson, Charles, Esq. 16 *Bucklersbury*
Wilkinson, Jeptha Avery, Esq. *Chorley, Lancashire*
Wilkinson, Mr. Henry, 12 *Ludgate-hill*
Wilkinson, William, Esq. 53 *Old Broad-street*
Williams, John Copner, Esq. *Denbigh, North-Wales*
§ Williams, Mr. Llewellyn, 4 *Old Bailey*
Williams, Mr. O. 3 *Queen's-head-passage, Newgate-street*
Williams, Mr. J. *Elm-grove, Mortlake*
Williams, J. L. L. Esq. 7 *New-square, Lincoln's-inn*
§ Williams, William, Esq.
Williams, Mr. William, *Great St. Helen's*
Williams, Mr. Richard, 154 *High Holborn*
§ Williamson, Mr. Richard, 14 *Moore-place, New Bethlem, Lambeth*
Willimott, John, Esq. *Streatham Common*
§ Willis, William, Esq. 76 *Lombard-street*
Wilson, Mr. D. *Paris*
Wilson, Mr. Edward, *Wellington-street, Strand*
Wilson, James, Esq. M.P. *Sneaton Castle, near Whitby, Yorkshire*
Wilson, Jos. Esq. 30 *Milk-st. and Highbury-hill, Islington*
§ Wilson, Lestock Peach, Esq. 6 *Russell-place, Fitzroy-sq.*
§ Wilson, Rich. Esq. (V.P.) F.S.A. F.H.S. 47 *Lincoln's-inn-fields*
§ Wilson, Richard Percy, Esq. 47 *Lincoln's-inn-fields*
Wilson, Richard, Esq. *Moke, Stafford*
§ Wilson, Thomas, Esq. 12 *Montague-street, Portman-square*
Wilson, Mr. William, 18 *Duke-street, St. James's*
Wimbridge, John, Esq. 25 *North Audley-street, Grosvenor-square*
Winchester, Henry, Esq. *Buckingham-street, Strand*
Winkworth, Mr. Thomas (Chairman of the Committee of Manufactures) 150 *Cheapside*
Windus, Thomas, Esq. F.A.S. *Stamford-hill*
§ Winne, Captain J. Lascelles
§ Winsor, Fred. Albert, Esq. 10 *John-street, Adelphi*
Wisker, Mr. John, *Pottery, Vauxhall*
§ Wood, Edward, Esq. F.H.S. *Northumberland-street, Strand, and Hanger-vale, near Ealing*
Wood, Mr. James, 11 *Chandos-street, Covent-garden*
Wood, Mr. James, jun. *New South Wales*
Wood, John, Esq. *Cardiff*
Wood, John, Esq. *Bartholomew Hospital*
§ Wood, J. W. Esq. *Bromley Common*
Wood, Lawrence Watson, Esq. *Stock Exchange*

Wood, Thomas, Esq. *Little St. Thomas Apostle*
Woolly, George, Esq. 62 *Bread-street*
§ Wright, Charles, Esq. 20 *Old Jewry*
Wright, J. Esq. *Market-Drayton, Shropshire*
Wright, Mr. Robert, 3 *Harper-street, Red Lion-square*
Wyatt, Lewis, Esq. *Suffolk-street, Charing-cross*
§ Wyatt, W. H. Esq. *Maiden-lane, Queen-street*
Wyon, William, Esq. *His Majesty's Mint*

Y.

Yarrel, Mr. William, 9 *Great Ryder-street, St. James's*
Yates, John Ashton, Esq. *Liverpool*
Yockney, Mr. Samuel F. *Torrington-square*
Yonge, Mr. George, 156 *Strand*
Youatt, Mr. Wm. 3 *Nassau-street, Middlesex Hospital*
Young, Florence, Esq. 143 *Borough*
Young, Mr. Geo. Adam, 32 *Percy-street, Bedford-square*

Z.

Zackary, M. M. Esq. F.H.S. 20 *Adam-street, Adelphi, and Strand on the Green, Kew*

November 26, 1827.

The following Noblemen, whose predecessors were Members of the Society, having, on application by the Secretary, signified their wish to become Members, were elected on the First Day of the present Session.

James Duff, Earl of Fife.
Philip Henry Stanhope, Earl of Stanhope.
John Talbot, Earl of Shrewsbury.
James Edward Harris, Earl of Malmesbury.
William George Monckton Arundel, Viscount Galway.

CORRESPONDING MEMBERS.

LORD CHARLES HENRY SOMERSET

Sir Galbraith Lowry Cole, K.G. C.B. &c. *Governor of the Mauritius*

Charles Baron Dupin, *Member of the Royal Academy of Science of Paris, &c. &c.*

Sir Peregrine Maitland, K.C.B. &c. *Lieutenant-Governor of Upper Canada*

J. T. Bigge, Esq. *Commissioner of Inquiry into the State of the Colonies, Cape of Good Hope*

Sir Thomas Brisbane, K.C.B. &c. *Governor of New South Wales*

James Henderson, Esq. &c. &c. &c. *British Consul-General, Colombia*

F. Forbes, Esq. &c. &c. &c. *Chief Justice of New South Wales*

Marie Claude Antoine Marrier, Baron de Mienville, *Ancient Captain of the French Navy, Knight of St. Louis, &c. &c., Paris*

Charles Telfair, *Paris*

Bibye Le Sage, *Paris*

Le Comte Charles Lasteyrie, *Vice-President of the Society at Paris for the Encouragement of National Industry*

Dr. Hamel, *Petersburgh*

N. Wallich, M.D. *Superintendant of the Botanic Garden, Calcutta*

The Chevalier Molard, *Member of the Royal Academy of Sciences, Paris*

M. Belot de Saril, *Malmaison, near Paris*

M. Cesar Moreau, *Elève Vice-Consul de France, Soho-square*

M. Marie Pierre Frederick Matthieu, *Member of the Academy of Dijon*

M. Masson Four, *Pharmacien de S.A.S.M. le Prince de Conde, Member of the Academy of Dijon*

M. de Gouvenain, *Member of the Academy of Dijon*

Thomas Fonblanque, Esq. *his Majesty's Consul, Calais, &c.*

Edward Nelson Alexander, Esq. *of Halifax, York*

The Marquis de Paroy, *Paris*

Eli Ives, M.D. *Professor of the Materia Medica and Botany at Yale College, Connecticut, United States*

Lieutenant-General Prince Volkonsky, *St. Petersburg*

Benjamin Silliman, Esq. *Professor of Chemistry, Yale College, Connecticut, United States*

Povel Lund, Esq. *Drammen, Norway*

J. Aldini, *Hon. Prof. of the University of Wilna, Member of the Imperial Institute of Milan, &c. &c.*

Mr. Benjamin Schlick, *Architect, Copenhagen*

M. Paulin Malosse, *Avignon*

Thomas Fonblanque, Esq. H.B.M. *Consul, Koeningsburg*

M. Vallot, *Sec. Academy, Dijon*

Rev. Lansdown Guilding, B.A. F.L.S., *and Member of the Geological and Wernerian Societies of Edinburgh*

William Harding Read, Esq. *Consul-General of the Azores, President at St. Michael's*

Rev. James Thomson, 24, *Northampton-square*

INDEX.

A.

ABBOT, Mr. H., the Silver Palette to, for a Drawing in Indian Ink, xxxi

Advertisement, general, describing the objects of the Society; the meetings of the Society; the form for proposing members; ladies being eligible as members, to vote by proxy at elections; members entitled to vote and assist in the business of the Society; their privilege of recommending two persons as visitors at the meetings of the Society, and introducing their friends to examine the various models, &c. iii; members to have the use of the Society's library; invitation to members and others to augment the library by contributions; form offered to persons inclined to leave money to the Society by will; the Society not responsible for any opinion or representation of facts contained in their volumes; the public requested to guard against impositions from persons advertising as having patents for articles sold under the pretended sanction of the Society's name; Society's publications; manner of communicating

Agriculture, when communications are to be sent, vi; premiums in, vi, vii; papers in, 1 to 58

Alabaster, Miss, the Large Silver Medal to, for a Portrait in Oil, xxxi

Arnold, Mr. A., the Silver Palette to, for a Drawing in Chalk, xxxi

Atkinson, Mr. T., the Large Silver Medal to, for an Original Composition of Architectural Ornaments, xxxi

B.

Bagnold, Capt. T. M., the Thanks of the Society to, for his mode of Preparing Lime-juice, xxxii; Communication respecting, 72

Bailes, Mr. H., the Silver Isis Medal to, for a Copy of a Figure carved in Wood, xxxi

Barrow, Mr. W. H., the Silver Isis Medal to, for a Perspective Drawing of a Crane, xxxii

Bielfield, Mr. H., the Large Silver Medal to, for a Design for the Society's Vignette, xxxi

Bizo, Mr. J., the Silver Isis Medal to, for a Drawing in Indian Ink, xxx

Blind to write Music, the Large Silver Medal to *Don Jaime Isern*, for his Instrument to enable the, 86

—— the Gold Vulcan Medal to *Mr. George Gibson*, for his Types for the, 90

Blair, Miss E., the Silver Palette to, for a Drawing in Chalk, xxx

Bone, Mr. C. R., the Large Silver Medal to, for a Portrait in Miniature, xxxi

Bothway, Mr., Gunner, R. N., the Silver Vulcan Medal to, for his Improved Cat-block, xxx; his Communication respecting, 131

Bower, Mr. Ab., the Gold Isis Medal to, for a Portrait in Oil, xxxi

——— *Mr. J.*, the Large Silver Medal to, for his Improved Lathe-chuck, xxx; his Communication respecting, 143

Brigstoke, Mr. T., the Silver Isis Medal to, for a Painting in Oil of Still Life, xxxi

British Leghorn, Twenty Guineas to *Messrs. J. and A. Muir*, for their Hats of, 160

Burn, Mr. W., the Silver Vulcan Medal to, for his Rolling-press for Bookbinders, xxx; his Communication respecting, 148

C.

Caffin, W., Esq., the Large Silver Medal to, for his Instrument for Filling Cartridges, &c. xxx; his Communication respecting, 106

Callaghan, Mr. J., the sum of Five Guineas to, for his Face-guard for Smelters, xxx; his Communication respecting, 152

Cameron, Mr. C., Five Guineas to, for his Soda Ley for the use of Dyers, xxxi; his Communication respecting, 68

Candidates, General Notice to, v

Cap for a Malt-kiln, the Large Silver Medal to *Mr. W. H. Perkins*, for his, 129

Cape Wine, the Large Gold Medal to *Fr. Collison, Esq.*, for, 166

Catalogue of the Models, Machines, &c. &c. received since the publication of the Forty-third Volume of Transactions, 175

Cat-block, the Siver Vulcan Medal to *Mr. J. Bothway, R. N.*, for his Improved, 131

Charlton, W. J., Esq., the Silver Vulcan Medal to, for his Closet for Official Papers, xxx; his Communication respecting, 111

Chemistry and Mineralogy, when claims for Premiums in this department are to be sent in, vii; premiums in, vii to xi; papers in, 59 to 74

Clarke, Mr. R., the Gold Isis Medal to, for a Marine Painting in Oil, xxxi

Clocks, Letter from *Mr. W. Wynn*, respecting Improvements made by him in Turret, 157

Clock, the Large Silver Medal to *Mr. J. P. Paine*, for his Self-Illuminating, 139

Closet for Official Papers, the Silver Vulcan Medal to *W. J. Charlton, Esq.*, for his, 111

Cockburn, Miss, the Large Silver Medal to, for a Portrait in Water Colours, xxx

Colonies and Trade, when claims for premiums in are to be sent, xxv; premiums in, xxv to xxvii; papers in, 166

Collins, Mr. S., the Silver Isis Medal to, for a Portrait in Oil, xxxi

Collison, F., Esq., the Large Gold Medal to, for Cape Wine of Superior Quality, xxxii; his Communication respecting, 166

Contents, xxix

Corbaux, Miss F., the Large Silver Medal to, for a Portrait in Miniature, xxx

Cowen, R., Esq., the Gold Vulcan Medal to, for his Draining Syphon, xxx; his Communication respecting, 113

Crabb, Mr. W. A., the Silver Palette to, for a Drawing in Water Colours, xxxi

Crockford, Master H., the Silver Palette to, for a Drawing in Pencil of a Landscape, xxx

D.

Derby, Miss C., the Silver Isis Medal to, for a Drawing in Chalk, xxxi

Depree, Miss C., the Large Silver Medal to, for a Drawing in Water Colours, xxxi

Draining Syphon, the Gold Vulcan Medal to *R. Cowen, Esq.*, for his, 113

E.

Eke, Mr. James, the Silver Isis Medal to, for an Engraving on Steel of a Cotton Machine, xxxi

F.

Face-guard for Smelters, the sum of Five Guineas to *Mr. J. Callaghan*, for his, 152

Fennell, Mr. J. G., the Large Silver Medal to, for a finished Drawing in Chalk, xxxi

Field, Miss S., the Large Silver Medal to, for a Drawing in Pencil, xxx

—— *Mr. G.*, Twenty Pounds to, for his Colourless Lac Varnish, xxxii; his Communication respecting, 59

Forester, the Hon. Miss, the Silver Isis Medal to, for a Copy of Figures in Water Colours, xxx

Forrest, Mr. J. B., the Silver Isis Medal to, for a finished Engraving of a Portrait, xxxii

Forest Trees, the Gold Ceres Medal to *Walter Long, Esq.*, for Planting, 1

G.

Gibson, Mr. George, the Gold Vulcan Medal to, for his Types for the Blind, 90

Girder of wrought Iron, the Silver Vulcan Medal to *Mr. G. Smart*, for his Trussed, 125

Green, Mr. B. R., the Silver Isis Medal to, for a Portrait in Oil, xxxi

—— *P., Esq.*, the Silver Ceres Medal to, for his Waggon for Conveying Live Lambs to Market, xxix; his Communication respecting, 45

Gwennap, Miss A., the Silver Isis Medal to, for a Composition in Water Colours, of Fruit, xxxi

H.

Hawks, John, Esq., the Large Silver Medal to, for his Revolving Lights for Steam-boats, 136

Hart, Mr. M. M., the Silver Isis Medal to, for an Outline in Chalk, xxxi

Hillman, Mr. Joseph, the Large Silver Medal to, for his Sliding Rudder, xxix; his Communication respecting, 107

Horn, the Silver Vulcan Medal and Five Guineas to *Mr. J. James*, for his mode of Opening, 164

Houlton, J., Esq., the Thanks of the Society to, for his mode of Preparing Vegetable Extracts, xxxii; his Communication respecting, 70

Hood, Mr. W. J., Lieut. R. N., the Large Silver Medal to, for his Ice-saw, xxix; his Communication respecting, 96

Hookey, Mr. James, the Large Silver Medal to, for his Improved Ship's Log, xxix; his Communication respecting, 99

Hughes, Mr. T., a Medal was awarded to him, but he could not receive it, having already had an equal or superior reward in the same department of art, xxxii

Hurlstone, Miss J. W., the Silver Isis Medal to, for a Drawing in Water Colours, xxx

I.

Ice-saw, the Large Silver Medal to *W. J. Hood, Esq., Lieut. R. N.*, for his, 96

Isern, Don Jaime, the Large Silver Medal to, for his Instrument to enable the Blind to write Music, xxx; his Communication respecting, 86

J.

James, Mr. J., the Silver Vulcan Medal and Five Guineas to, for his mode of Opening Horn, xxxii; his Communication respecting, 164

Jones, Miss M., the Silver Isis Medal to, for a Portrait in Miniature, xxxi

K.

Kearsley, Miss H., the Large Silver Medal to, for a Portrait in Oil, xxxi

Key for a Lock, the Silver Vulcan Medal to *Mr. George Machin*, for his Expanding, 123

Kooystra, Mr. J. B., Lieut. R. N., the Silver Vulcan Medal to, for his Stopper for a Chain Cable, xxx; his Communication respecting, 109

L.

Lathe Chuck, the Large Silver Medal to *Mr. J. Bower*, for his Improved, 143

Lights for Steam-boats, the Large Silver Medal to *John Hawks, Esq.* for his revolving, xxx; his Communication respecting, 136

Lime-juice, the Thanks of the Society to *Captain T. M. Bagnold*, for his Mode of Preparing, 72

Lines, Mr. Fr., the Large Silver Medal to, for a Drawing in Pencil, xxxi

Loate, Mr. S., the Gold Isis Medal to, for an Original Design for a Metropolitan University, xxxi

Log-ship, the Large Silver Medal to *Mr. James Hookey*, for his Improved, 99

Long, Miss, the Silver Palette to, for a Copy in Pencil of a Landscape, xxx

Long, Mr. Jos., Five Guineas to, for Fine Plat from British Materials, xxxii; Communication respecting, 160

Long, W., Esq., the Gold Ceres Medal to, for Planting One Hundred and Ninety-five Acres with Forest Trees, xxix; his Communication respecting, 1

Luning, Mr., Twenty Pounds to, for his Colourless Lac-Varnish, 59

M.

Machin, Mr. G. the Silver Vulcan Medal, for his Expanding Key for a Lock, xxx; his communication respecting, 123

Mangle, the sum of Five Pounds to *Mr. Jonas Thurrell*, for his Improved, 127

Manning, Miss, the Gold Isis Medal to, for an Historical Composition in Oil, xxxi

Manufactures, when Claims for Premiums in are to be sent, xxi; Premiums in, xxi, xxii; Papers in, 160

Marbles, on Exhibiting Specimens of British, xxix

Mason, Mr. J., the Silver Isis Medal to, for a Copy of a Bust from the Antique, xxxi

Measuring Grain, &c. the Large Silver Medal to *W. Caffin, Esq.*, for his Instrument for, 106

Mechanics, when Claims for Premiums in are to be sent, xxiii; Premiums in, xxiii, xxiv; Papers in, 75 to 159

Medicinal Extracts, the Thanks of the Society to *J. Houlton, Esq.*, for his Mode of Preparing, 70

Members, List of Contributing, (i); Corresponding, (xxxviii); Seventy Elected since last distribution, xxxii

Mintorn, Miss, the Gold Isis Medal to, for a Composition in Water Colours, xxx

Muir, Messrs. J. and A., Twenty Guineas to, for their Hats of British Leghorn, xxxii

——————— Ten Guineas to, for their Fine Plat, xxxii; their Communication respecting, 160

Musters, Miss S. C., the Silver Isis Medal to, for a Drawing in Chalk, xxx

O.

Officers of the Society, a List of the, ii

P.

Packham, Mr. J., the Silver Vulcan Medal to, for his Self-adjusting Truss, xxx; his Communication respecting, 154

Paine, Mr. J. D., the Large Silver Medal to, for an Original Design for a Court of Justice, xxxi

——— *Mr. J. P.*, the Large Silver Medal to, for his Mode of Illuminating Public Clocks, xxx; his Communication respecting, 139

Papworth, Mr. E., the Silver Palette to, for a Copy in Bas-relief, xxxi

Parr, Mr. R., the Large Silver Medal to, for an Etching of Animals, xxxii

Pasmore, Mr. D., a Medal was awarded to him, but he could not receive it, having already had an equal or superior reward in same department of art, xxxii

Pasquier, Miss Du, the Silver Palette to, for a Drawing in Chalk, xxx

Pendulum, Five Pounds to *Mr. Adam Reid*, for his Compensation, 151

Perkins, Mr. W. H., the Large Silver Medal to, for his Improved Cap for a Malt-kiln, xxx; his Communication respecting, 129

Phipps, Mr. G. H., the Large Silver Medal to, for a Perspective Drawing of a Steam-engine, xxxii

Pillichody de Bavoy, Miss M. A., the Silver Isis Medal to, for a Drawing in Water Colours, xxx

Pitts, Mr. T., the Silver Palette to, for a Drawing in Chalk, xxxi

Plantations, the Large Silver Medal to *W. Withers, Jun. Esq.*, for the Management of, 19

Plat, Ten Guineas to *Messrs. J. and A. Muir*, for their Fine, 160

—— Five Guineas to *Mr. Jos. Long*, for do., 160

Poppy, Mr. C. Jun., the Gold Ceres Medal to, for his Method of Protecting Turnips from the Fly, xxix; his Communication respecting, 54

Polite Arts, Premiums in, xii to xxi; Conditions for the, xx

Preface, v

Premiums, i

Presents received by the Society from November, 1826, to June, 1827, 167 to 174

Press for Bookbinders, the Silver Vulcan Medal to *Mr. W. Burn*, for his Rolling, 148

R.

Redaway, Miss A., the Silver Palette to, for a Drawing in Pencil, xxx

Reid, Mr. Ad., Five Pounds to, for his Compensation Pendulum, xxx; his Communication respecting, 150

Rewards bestowed by the Society, &c., xxix

Reel for Captain Manby's Apparatus, the Silver Vulcan Medal to *Mr. W. Thorold*, for his Improved, 75

Reeve, Mr. J., the Silver Isis Medal to, for a Finished Drawing in Chalk, xxx

Rudder, the Large Silver Medal to *Mr. Jos. Hillman*, for his Sliding, 107

S.

Salmon, Miss H., the Large Silver Medal to, for a Drawing in Chalk, xxx

Setchell, Miss E., the Silver Palette to, for a Drawing in Chalk, xxxi

Ship, the Large Silver Medal to *Mr. J. Weekes*, for Securing the Dead Eyes of a, 103

Slade, Mr. J., the Silver Isis Medal to, for a Drawing in Pencil, xxxi

Smart, Mr. G., the Silver Vulcan Medal to, for his Wrought-iron Trussed Girder, xxx; his Communication respecting, 125

Smith, Mr. W., a Medal was awarded to him, but he could not receive it, having already had an equal or superior reward in same department of art, xxxii

Soda Ley for Dyers, Five Guineas to *Mr. C. Cameron* for his, 68

Stodart, Mr. George, the Silver Isis Medal to, for a Drawing in Indian Ink, xxxi

Stopper for a Chain-cable, the Silver Vulcan Medal to *Mr. J. B. Kooystra* for his, 109

Stow, Mr. Edward, the Large Silver Medal to, for a Landscape in Oil, xxxi

T.

Thorold, Mr. W., The Silver Ceres Medal to, for his Machine for Slicing Turnips, xxix; his Communication respecting, 47

——————— the Silver Vulcan Medal to, for his Reel for Captain Manby's Apparatus, xxx; his Communication respecting, 75

Thurrell, Mr. Jonas, the Sum of Five Pounds to, for his Improved Mangle, xxx; his Communication respecting, 127

Towne, Mr. Jos., the Large Gold Medal to, for a Model in Coloured Wax of the Human Brain, xxxi

Turner, the Hon. Miss C., the Silver Palette to, for a Copy in Water Colours of Flowers, xxx

Turnips, the Silver Ceres Medal to *Mr. W. Thorold*, for his Machine for Slicing, 47.

——————— from the Fly, the Gold Ceres Medal to *Mr. C. Poppy, Jun.*, for Protecting, 54

V.

Varnish, Twenty Pounds to *Mr. G. Field*, for his Colourless Lac, 59

——————— Twenty Pounds to *Mr. Luning*, for his Colourless Lac, 59

W.

Walker, Miss C., the Silver Palette to, for a Drawing in Water Colours, xxx

Waggon for Conveying Live Lambs to Market, the Silver Ceres Medal to *P. Green, Esq.* for a, 45

alsh, Mr. James, the Large Silver Medal to, for a Composition, in Water Colours, of Flowers, xxxi

Warner, Mr. W., the Gold Isis Medal to, for an Engraving in Intaglio of a Group, xxxi

Webb, Mr. R., the Silver Isis Medal to, for a Copy in Bas-relief, xxxi

Weekes, Mr. J., the Large Silver Medal to, for his Mode of Securing the Dead-eyes of a Ship, xxix; his Communication respecting, 103

Western, C. C., Esq., M. P., the Gold Ceres Medal to, for his Long Anglo-Merino Wool, xxix; his Communication respecting, 36

Withers, W. Jun. Esq., the Large Silver Medal to, for his Experiments on the Effect of Manure on Young Plantations of Forest Trees, xxix; his Communication respecting, 19

Wool, the Gold Ceres Medal to *C. C. Western, Esq.*, M. P., for Long Anglo-Merino, 36

Wooles, Mr. W., the Large Gold Medal to, for an Original Model of an Historical Group, xxxi

Wynn, Mr. W., Letter from, respecting certain Improvements made by him in Turret Clocks, 157

THE END.

T. C. HANSARD, Pater-noster-row Press.

ERRATA ET CORRIGENDA

IN VOL. XLIV.

Title page, for offered in 1825 *read* 1826
Page 16 *line* 5 *from bottom, for* 1826 *read* 1824
—— 27 — 4 *from bottom, for* Plate II *read* Plate I
—— 28 — 5 *for g read s*
—— 46 — 2 *from bottom, for b read l*
—— 77 — 5 *from bottom, for* upon *read* against
—— 77 — 4 *from bottom, for* outer edge *read* inner surface
—— 79 — 8 *for* 1 and 2 *read* 1 and 5
—— 105 Fig. 1 *b should be l*
—— 114 *line* 4 *after* the balance spring *insert* winding up
—— 114 — 6 *after* in like manner *insert* when the spring unwinds
—— 125 — 6 *from bottom, for* wheels *a read* wheels A
—— 126 — 8 *from bottom, for* no *read* to
—— 153 — 12 the *r* is omitted in the plate
—— 153 — 18 *for* roller *read* rollers
—— 178 — 6 *from bottom, for* permantnt *read* permanent

TRANSACTIONS

OF

THE SOCIETY

OF

Arts, Manufactures, and Commerce.

VOL. XLVI.

LONDON:
J. MOYES, TOOK'S COURT, CHANCERY LANE.

TRANSACTIONS

OF THE

SOCIETY

INSTITUTED AT LONDON

FOR THE

ENCOURAGEMENT

OF

ARTS, MANUFACTURES,

AND

COMMERCE:

WITH

THE PREMIUMS

OFFERED IN THE YEAR 1827-8.

VOL. XLVI.

LONDON:

SOLD BY THE HOUSEKEEPER, AT THE SOCIETY'S HOUSE
IN THE ADELPHI;
AND BY ALL BOOKSELLERS.

1828.

PREFACE.

THE Committee of Correspondence and Papers, to whose care the publication of the Transactions of the Society is confided, present the following as the summary of the present Volume.

In the class of Agriculture, the large gold medal has been voted to Lord Newborough, for his extensive plantations of forest-trees in the counties of Caernarvon and Denbigh. The whole number of trees planted by his lordship is not far short of four millions, of which a fair proportion are oak, to stand for heavy timber. The Society have always encouraged the establishment of plantations on soil not adapted to more valuable crops; and perhaps not a single session has passed during the last sixty years or more, in which they have not had the pleasure of conferring at least one medal for this very important object. We know that, in more cases

than one, the annual premium-book of the Society has suggested to landed proprietors the undertaking of extensive plantations; and although, no doubt, in a vast majority of instances, the motive to planting has been a long-sighted and wisely-regulated attention to self-interest, yet the Society, by the bestowal of their medals for such exertions, have made the volumes of their Transactions a valuable register of the dates and circumstances attending the establishment of plantations on all soils and exposures, and in the cheapest as well as in the most elaborate modes.

The silver Ceres medal has been voted to Joseph Houlton, Esq. for the introduction to public notice of a new esculent vegetable. The Stachys palustris, or March all-heal, is a plant not unfrequently occurring on the sides of ditches, or of moist rich corn-fields: it increases rapidly by creeping roots, and forms on these during the summer a number of thick, half-tuberous buds, from which the stems of the next year are to arise. From the end of autumn to the close of winter, these tuberous buds abound in a mild, somewhat sweetish, farinaceous matter, and are

then fit for domestic use, being crisp, without fibre, and of a peculiar but scarcely perceptible flavour. The plant and roots are figured in Curtis's Flora Londinensis; but Mr. Houlton has the credit of having first suggested its use as an esculent vegetable, and of having made some experiments on the best way of cultivating it. In one respect the subject is interesting to the philosophical botanist, as offering, perhaps, the only known instance of a plant belonging to the natural order of the *labiatæ* producing farinaceous tubers capable of being applied to human food. In general, the only use derived from plants of this order is as condiments, like sage, mint, thyme, &c. or as affording essential oil, like origanum, rosemary, peppermint, and lavender.

In the class of Chemistry, the silver Isis medal has been voted to Mr. George Jackson, for his apparatus for instantaneous light. The singular fact that platina, in a state of very minute division, is capable of becoming red-hot when exposed to a stream of hydrogen gas, and then of inflaming the gas itself, was first discovered by Dobereiner. The construction of an apparatus whereby this property of platina is applied to the

instantaneous production of a flame for the purpose of lighting a taper, is due to Gay Lussac. Mr. Jackson has made some modifications in the apparatus, which render it more portable, and, in the opinion of the inventor, less liable to be out of order.

The silver Isis medal and ten pounds have been voted to Mr. T. Cogan, for his method of purifying linseed and rape oils. There are two great uses to which oils expressed from seeds are applied, namely, to burn in a lamp, and, when mixed with white lead and other bases, to form oil-paint. The mucilage which all such oils contain is injurious to the former application of them, by clotting the wick, and thereby impairing the light; and the yellow colour which most of them naturally possess, degrades the tone of the white and other delicate colours when made into paint by mixture with them. Several years ago, M. Thénard, a celebrated French chemist, proposed the application of sulphuric acid in clarifying oils, which, though successful in a considerable degree, required a long and difficult process of filtration, in order to separate the clear oil from the impurities. Mr. Cogan retains the employ-

ment of sulphuric acid, but in a more dilute state than that in which it was used by M. Thénard; and by throwing in subsequently a considerable quantity of steam, causes all the impurities to settle by subsidence in the course of a few hours. The loss does not exceed three or four per cent, the whole of the operation of filtering is avoided, the entire process is completed in forty-eight hours, and the oil is far more limpid and colourless than before.

In the class of Mechanics, the gold Isis medal has been awarded to Mr. L. Hebert, for his substitution of plumbago instead of oil in diminishing the friction of the rubbing parts of clocks. Every one is acquainted with the effect produced by oil or grease in diminishing the friction of those pieces of machinery that are in common use; a stiff-going lock and a creaking hinge are both rectified by the application of a few drops of oil. But by long exposure to the air, oil is more or less changed; it becomes rancid and thick, and an acid is developed, which corrodes, and therefore injures more or less, the surface of brass, copper, or steel, with which it may be in contact; it also detains all those little motes or filaments, with which the air

of inhabited places is filled, that may happen to touch it; and thus, in no great length of time, becomes foul, and requires to be renewed. All those instruments that, by the equable revolution of their parts, are intended to measure the lapse of time, are seriously affected in the regularity of their going by the progressive thickening of the oil by which the pivots and other rubbing parts are lubricated. Attempts have been made, but with no very great success, to retard this tendency of the oil to decomposition; and, in the higher-priced clocks and chronometers, the use of oil has to a certain degree been dispensed with, by making the caps and holes, in which the steel pivots turn, of ruby, or other hard and highly polished gems. Still, oil, or something equivalent to it, must be employed in some parts; and, in proportion as the mechanism of clocks approaches nearer and more near to perfection, it becomes of increasing importance to avoid the use of a substance that cannot be employed without introducing a cause of error, always increasing till it seriously affects the rate of going, and renders it necessary to take the instrument to pieces, in order to clean it and renew the oil. Plumbago, or, as it is usually called, black lead, is a soft,

unctuous-feeling substance, which readily takes a high degree of polish, and therefore is well qualified, when interposed between two rubbing surfaces, to diminish greatly their mutual friction; it is also perfectly unalterable by exposure to air, has no chemical action on substances at any atmospheric temperature, and readily adheres, by a slight degree of rubbing, to any surface to which it may be applied. Mixed up with oil, it has occasionally been used for lubricating machinery, and it is understood to be the chief ingredient in the anti-attrition paste that is applied with such good effect to the axles of carriages. But even the finest plumbago, such as is used for the best black-lead pencils, contains certain gritty particles, which wholly prevent it from being applied in its natural state to reduce the friction of delicate clock-work. It is therefore subjected by Mr. Hebert to repeated grinding and washing over, in order to separate all its impurities, and is then applied in a state of powder, or mixed up into a soft mass, with a drop or two of pure spirit of wine. It readily adheres to the surface of a steel pivot, as well as to the inside of the hole in which it runs; so that the rubbing surfaces are no longer one metal upon another, but plumbago

upon plumbago. These surfaces, by their mutual action, speedily acquire a polish only inferior to that of the diamond, and then the retardation of the machine from friction is reduced almost to nothing, and wear and tear from this cause is totally prevented. An astronomical clock of Mr. Hebert's own making, of which the pivots and holes, and teeth of the escape-wheel, had been covered on their rubbing parts with fine plumbago fourteen years before, was taken to pieces by the Committee: the surfaces of plumbago were found to be for the most part unbroken, and highly polished; and neither the pivots nor sockets appeared, on examination with high magnifiers, to have undergone the slightest degree of wear. It is evident that plumbago may be applied with equally good effect to other pieces of delicate machinery besides clocks; and the Society confidently anticipate that, by giving publicity to this invention of Mr. Hebert's, they are conferring on the community another of those benefits upon which alone they have ever been desirous to rest their claims on the good will and support of their countrymen.

The large silver medal has been voted to

Mr. W. Melvine, for his detached clock escapement; the large silver medal and five pounds to Mr. R. May, for his clock escapement; and the large silver medal and five pounds to Mr. T. Judge, for his self-adjusting pendulum.

There is, perhaps, no kind of machinery about which so much talent and ingenuity, so much manual dexterity and refined application of philosophical principles, have been employed as the construction of clocks and watches; and the Society have always shewn great readiness in granting to this department of Art all the encouragement which it is in their power to bestow. In so doing, they have proceeded on two principles,—the one, of rewarding and publishing such new modifications as appear to be decided improvements on the methods of construction actually in use; the other, of encouraging original invention and skill in young artists, even where the product of such skill is to be regarded rather as furnishing hints for improvement, than of immediate practical utility. It is an axiom in clock-making, that the more perfectly the escapement is detached from the train, the more accurately will the balance or pendulum perform its

vibrations, and the more truly will time be measured. One method of effecting this is by means of a remontoire spring, several varieties of which have already been published. Mr. Melvine's and Mr. May's escapements are both of this kind; they are new and ingenious, and, while they do credit to the inventors, add to the resources of the art. Mr. Judge's improvement relates to another part of the machine. Spring pendulum clocks, especially those with small arcs of vibration, are often found to be out of beat when moved from one place to another, or when set on a table or bracket that is not perfectly level; and from the same cause will often stop altogether. Mr. Judge has avoided the inconvenience just mentioned, by supporting the part which carries the pendulum and pallets on the two collets which receive the axis of the escape wheel, and suspending from it a rod with a weight at its end, sufficient by its gravity to ensure the vertical position of the part to which it is attached, although the clock itself may be upon an inclined plane.

The large silver medal has been voted to Lieutenant Ackerley, R.N., for an appendage

to ships' boats, especially those of men-of-war, consisting of certain bars, with cross pieces, let into the sides of the boat. These, in the event of the boat upsetting, slip out, and thus offer to the crew the means of holding on till they are relieved. An experiment with a boat fitted up as above described was tried at Plymouth, in presence of the admiral commanding in chief at that port, and of several naval captains, who have furnished the Society with testimonials in favour of the invention.

The large silver medal has been voted to J. Higgins, Esq. for his revolving light for steam-boats. If serious and often fatal consequences happen from ships under sail striking one another, still more likely is the event to be disastrous when two steam-boats, or one steam-boat and a sailing vessel, suffer this accident. The Society last year rewarded a contrivance by which a rotatory motion was given to two lamps at the ends of a long arm, by connecting it with the shaft to which the paddle-wheels are attached; such an arrangement will not only distinguish a steam-vessel from all others, but will also indicate, within certain limits, the rate at which it is

going. The same general principle has been adopted by Mr. Higgins, except that only one of the lights is made to move; the apparatus is thus simplified and rendered less cumbersome, and consequently is more likely to be adopted.

The large silver medal has also been awarded to H. W. Hood, Esq. commander of his Majesty's ship Hyperion, for a floating bridge. The frigate commanded by this officer has been, during the last three years, stationed in the harbour of Newhaven for a particular service, in which it is very important that ready access should be had at all times from the ship to the shore. But although the vessel is moored within a short distance of the wall of the harbour, the bed of mud is so deep as to be wholly impassable, and the only time that communication could be maintained with the shore was at high-water by means of boats. The service intrusted to Captain Hood being materially impeded by this obstacle, he set himself to form a bridge by means of the cables, casks, gratings, and other articles, with which every ship of war is necessarily provided; and the result is a secure and very ingeniously constructed bridge, easily accessible at any time

of tide, though the difference between high and low water in the harbour of Newhaven is not less than twenty-two feet. There are many similar situations, both at home and abroad, where it may be expedient to station ships of war, and in all such cases Commander Hood's invention will be found of great advantage.

Mr. Castell has had the silver medal voted to him for his improved mode of drawing off wine from the cask in order to bottle it. The double cock which he uses for this purpose expedites the business, occasions a less loss of liquor, and, by allowing it to flow continually, instead of with intermissions, as is the usual mode, avoids the risk of disturbing it till quite upon the lees

The silver Isis medal and five pounds have been voted to Mr. T. Chapman, for a new carriage adapted to Mr. Palmer's rail-way, by the use of which it is expected that increased facility will be obtained in passing from one line of direction to another, and in turning in short curves.

The silver Isis medal and five pounds have also been awarded to Mr. Alexander Bain, for his

stamps for the use of bookbinders. These are in triangular pieces, are capable of being fixed on a frame in various positions and at various distances, so as to adapt them to books of different sizes, and to produce considerable variety out of a few simple elements.

The silver medal has been voted to Mr. W. Hilton, for his ladder-crane. There are many situations, especially in London, where, from want of room, heavy and bulky articles are obliged to be stowed away in cellars or vaults, the access to which is very inconvenient and contracted. The cellar of a warehouse occupied by Mr. Hilton is in this condition, the only entrance to it being by a trap-door and ladder. This ladder he has ingeniously converted into a crane at comparatively a small expense and very little increase of bulk, by means of which large articles may be lowered into, or raised out of, a cellar, with little trouble.

Two silver Isis medals have been voted, one to Mr. James Dowie, and one to Mr. Alexander Black, for their machine for the use of boot and shoe-makers. It is generally known, that the

bent and constrained sitting posture in which the makers of boots and shoes perform their work, holding the materials on which they are employed between their knees as in a vice, subjects this class of artisans to chronic diseases of a very painful and afflicting nature, by which their health is often so seriously impaired as to leave no chance of relief except in the hard alternative of quitting their occupation, — an alternative which, to any man, and especially to those who earn their daily bread by their daily labour, cannot but be productive of great anxiety, and is too often attended with the breaking up of those habits of industry and regularity on which depend the respectability of the individual and the welfare of his family. The Society have always shewn themselves very desirous of encouraging inventions that have in view the prevention of these calamities; and have at different times rewarded and published machines specially for the use of the very numerous class of workmen who are employed in boot and shoe-making. These machines may be seen in the Society's repository, but have only been occasionally adopted; because, although the principles of their construction are good, the details are de-

fective. The machine of Messrs. Dowie and Black, while in principle it is nearly the same with those already invented, has been formed with such a clear professional knowledge of the objects to be aimed at and of those to be avoided,—has been arranged with such excellent contrivance and with such simplicity of movement,—as apparently to leave nothing farther to be desired. Mr. Dowie, who is a master boot and shoe-maker, has introduced the use of the machine among his own workmen, and it is beginning to be adopted by others of his townsmen in the same line of business.

The large silver medal and twenty pounds have been voted to Mr. M. Mottershead, for his expanding metallic piston for high-pressure steam-engines. In the low-pressure steam-engine, the temperature of the steam employed is seldom more than a few degrees above that of boiling water, and therefore in this the piston or plunger is surrounded with a band, or packing, as it is technically called, of greased hemp or cotton, which, by its equable pressure against the sides of the cylinder, prevents the loss of steam, while it adds as little as possible to the labour of the

engine. But where steam at a heat much higher than that of boiling water is used, the packing is so rapidly destroyed as to require constant reparation. To avoid the trouble and expense thus occasioned, expanding pistons, made entirely of metal, have been proposed and made trial of. As far as can be judged from the construction and excellent workmanship of Mr. Mottershead's piston, corroborated by the trials that have been made of it in two or three engines, it seems likely to answer its intended purpose, at least as well as any of the expanding pistons now in use.

The silver Isis medal has been voted to Mr. T. E. Bonner, for his door-lock.

The gold Isis medal has been voted to Mr. Joseph Clement, for his improved turning lathe. A difference exists, though perhaps it may be difficult to define the boundaries with much precision, between those engines or machines that are intended to produce manufactured articles in the usual sense of the word, (that is, articles immediately applicable to the supply of human wants,) and those of which the produce consists

in such parts as enter into the construction of machines of the former class. The loom, the lace frame, the machine for spinning cotton, the stocking frame, the corn mill, are examples of the first kind; the wire-drawing machine, the engine for cutting the teeth of wheels, the turning lathe, are examples of the second kind. To a person unacquainted with mechanics, the former class are the most interesting: the sight is dazzled by the rapid motion, and the imagination is bewildered by the immense complexity of parts, each performing its office with undeviating regularity, and the understanding is interested by following the successive changes undergone by the raw material in its progress to the complete manufactured fabric. We admire the master mind that has so combined all these movements and processes as to obtain from their concurrent action a definite and useful result. If, however, we analyse all this seeming complexity, we shall soon find that it reduces itself to a few movements — to a small variety of parts repeated over and over again — and in which very great precision is far from being requisite to the production of the manufactured article; because the manufactured article itself may vary within certain

limits, and continue equally applicable to the use for which it is intended. An inch in length of a piece of fine muslin may contain twenty-nine threads, and another inch in the same piece may contain thirty threads, and the difference shall be quite imperceptible even to the most practised eye. But no mechanical motion can be produced without the expenditure of power; and of this power a part only is really employed in effecting the intended object, the remainder being lost and dissipated in consequence of the imperfection of human workmanship. In some machines it has been found, that the power thus lost has amounted to by far the greater part of that originally employed; and as all first movers are costly, whether live power, the expansion of bodies by heat, or the force generated by the impulse of air or water in motion, it has of late years been an object of great solicitude to economise as much as possible the power which we have at our disposal. This is effected by increased precision and accuracy of fitting in those parts which, by their motion on one another, transmit the primary impulse to the place where the force is to be exerted. But it is obvious that, whatever precision the machine possesses, at least an equal degree of accuracy of

adjustment must exist in the tool or machine by which it is made. If the cylinder of a steam-engine is rejected, which, with a diameter of five feet, varies in any part more than the 80th of an inch, the lathe by which the demanded truth of bore is given to it must be at least equally true. Before the invention of the slide-rest had relieved the workman from the necessity of holding the cutter in his own hands, such precision was quite impossible; but, since that invention, improvements have been continually making on the lathe for turning metal, so as to convert it into the most accurate and most extensively applicable of all tools. Flat surfaces of unrivalled correctness have of late been produced by it, and it is to this employment of it that Mr. Clement's improvement particularly applies.

It is evident, when the mandril of a lathe, having a metal plate fixed to it, turns round with a uniform motion, and the slide-rest which carries the cutter is moving from the circumference of the work to the centre, that the quantity of metal passing over the edge of the cutter at each revolution, and therefore at equal intervals of time, is continually diminishing, in exact pro-

portion to the diminution of the spiral line described by the cutter on the face of the work. But in turning metal plates it is exceedingly disadvantageous to increase the speed of the work beyond a certain quantity; for when this happens, the edge of the cutter is broken and made dull, and the surface of the plate becomes indented and burnished, instead of being turned. The speed, therefore, must not exceed that which is suited to the work at its circumference, although for every other part it is slower than might safely be used in proportion to the approach of such part to the centre. Hence results a loss of time on the part of the workman, and of work done on the part of the instrument, which, considering the capital and skill expended in the construction of a first-rate lathe for turning metal, is a matter of no small importance. Mr. Clement has overcome this, almost the only remaining imperfection in the lathe, by making it self-regulating; so that, whatever be the situation of the cutter, equal quantities of metal shall pass over it in equal times, at the same time giving the workman the power of converting the varying rate of the mandril into a uniform one whenever he chooses.

The silver Isis medal has been awarded to Mr. Andrew Smith, for his lever cramp—a simple and extremely well-contrived instrument of great power, which has been very successfully applied by him to bring the edges of flooring boards in close contact previously to their being nailed down. It avoids the objections to the use of the other instruments that have been heretofore employed; and may, no doubt, be used by the carpenter for other purposes than that for which it has been primarily intended.

The large gold medal has been voted to J. P. Holmes, Esq. for an improvement in obstetrical instruments; and the silver Isis medal to Mr. Gibson, for a spoon of a particular construction, for administering medicine to children or lunatics. In voting the above rewards, the Society have acted in conformity to the opinions of eminent professional men, well qualified to give a sound judgment on the matters in question.

In the class of Manufactures, the large gold medal has been voted to C. T. Tower, Esq. of Weald-hall, Essex, for his flock of cashmeer goats, and for a shawl manufactured from their down.

A genuine cashmeer shawl of fine quality is one of the most precious of the manufactures of the East, on account of the exquisite softness and fineness of fibre of the material of which it is composed. Unsuccessful attempts had been made by two or three individuals to obtain, through British interest in India, a few of the cashmeer goats, in order to ascertain whether the breed could be naturalised in this country; and the gold medal of the Society has, for some years, been offered with the same view, in order to keep the public attention fixed on the subject. Equal anxiety has been shewn in France to introduce the shawl-goat into that country; and two French agents, under the patronage of the Emperor Napoleon, were sent to Persia for the purpose of making purchases of goats, in the province of Caspahan, of the genuine cashmeer breed. A considerable number of these animals was procured, and brought to Paris in the year 1823. Mr. Tower, happening to be then in that city, purchased four of these goats, two males and two females, and succeeded in conveying them safely to his residence in Essex. The animals have continued in health, and have mul-

tiplied rapidly; so that his present flock consists of twenty-seven, including the four original ones. They shew no impatience of cold, and are very healthy, requiring only the occasional protection of a shed in very rough weather. Their favourite food is the gorse or furze, which they devour eagerly, without being annoyed by its prickles. Their coat is long, coarse hair, intermixed with fine down, which begins to be loose early in April. Some of this down has been made into a shawl 54 inches square. The yarn was spun by Messrs. Pease, of Darlington, and was woven by Messrs. Miller and Sons, of Paisley. On examination by competent judges, it has been declared considerably superior to shawls made either in France or in Scotland, of the down from the original French flock; whether it is that the race has really deteriorated in France, or that Mr. Tower's down is purer, that is, better sorted, than the French. Since the subject has been before the Society, his Majesty has been pleased to transmit, through an official channel, his approbation of Mr Tower's exertions. He has also been pleased to accept a pair of the goats, and the shawl exhibited to the Society has been presented to his Majesty

as the first specimen of British art exercised on cashmeer down grown in Great Britain. The down produced by each goat is so small, that it can never become cheap; and if the manufacturers have the good sense resolutely to abstain from mingling it with any baser material, they may secure to themselves and to the country the credit and profit of an article that will always be valuable from its intrinsic qualities, and fashionable from its dearness and comparative rarity.

The silver Isis medal has been voted to Mr. R. Lloyd, for his samples of sheet cork. The principal use to which sheet cork has hitherto been applied is, as a material for socks or internal shoe soles, in order to protect the feet from damp. But from the mode by which thin plates of cork have hitherto been formed, the texture is more or less shattered, and therefore the utility of it much restricted. Mr. Lloyd has very successfully adapted the engine used for splitting skins to cutting plates or sheets of cork. The texture of the material is thus preserved unshaken, and he is enabled to produce sheets not more than a 32d of an inch thick. The inventor himself has applied sheet cork to form the frame-work of hats; and

there is no doubt that many other uses will soon be discovered for it.

In the class of Colonies and Trade, the gold Ceres medal has been awarded to a very interesting communication from the Reverend Lansdown Guilding, of the island of St. Vincent, respecting the insects which infest the sugar-cane in the West Indies. The plates are copied from Mr. Guilding's drawings, and have been presented to the Society by R. H. Solly, Esq.

The gold Isis medal has been awarded to W. Green, Esq. of Quebec, secretary to the Literary and Philosophical Society at that place, for a description, accompanied by samples, of several substances, both mineral and vegetable, the produce of Canada, from which valuable paints for the use of artists may be prepared. The samples, on their arrival, were put into the hands of artists, members of the Society, who have reported very favourably respecting them. As Mr. Green's communication was transmitted to the Society of Arts at the desire of the Quebec Society, it was thought right to forward the medal to its president, the Earl of Dalhousie, governor of the colony, with a request

that his Lordship would present the same to Mr. Green. This arrangement has the more readily been agreed to, because the noble Lord is also a member of the Society of Arts, and has taken great pains in making known to the colony over which he presides the list of premiums specially intended for the colonial possessions of the British nation.

The gold Ceres medal has been awarded to Gregory Blaxland, Esq. of Sydney, in New South Wales, for a sample of wine, the produce of his vineyard in that colony. Five years ago the large silver medal of the Society was conferred on this gentleman for a sample of wine from the same vineyard. The vines with which it is stocked are derived from a small black cluster grape, supposed to be a seedling from one of the claret grapes originally introduced by Mr. Blaxland. Being a native of that colony, it endures the climate far better than any of the imported vines. The wine sent this year is decidedly better than that for which the former reward of the Society was granted. It cannot be expected that the produce of such young vines should have much flavour; but as the stocks get older and less succulent, the

quality of their juice will no doubt improve. At present, it is praise enough, that the wine is sound and perfectly free from that flavour which characterises, not advantageously, the wines of another British colony.

CONTENTS.

PAGE

PREMIUMS offered in the Session 1828-9 i
List of Officers of the Society ii
Advertisement to the Public iii
General Notice to Candidates v
Rewards bestowed by the Society during the Session 1827-8 xxv

AGRICULTURE.

I. Lord Newborough on planting Forest-Trees 1
II. Joseph Houlton, Esq. on the introduction of the Roots of Stachys palustris as a new esculent vegetable 8

CHEMISTRY.

I. Mr. George Jackson on an apparatus for instantaneous Light 11
II. Mr. Thomas Cogan on a method of purifying Linseed Oil 15

MECHANICS.

I. Mr. James Dowie and Mr. Alexander Black on an Instrument for the use of Boot and Shoemakers 19

PAGE

II. H. W. Hood, Esq. Commander Royal Navy, on a Floating-Bridge 29
III. C. H. Ackerley, Esq. Lieut. R.N. on his Safety-Rods for Ships' Boats 33
IV. John Higgins, Esq. on his Revolving Light for Steam-Vessels..... 41
V. Mr. W. H. Hilton on a Ladder-Crane..... 44
VI. Mr. Alexander Bain on Movable Stamps for Bookbinders 46
VII. Mr. L. Hebert on Plumbago for Chronometers .. 48
VIII. Mr. Robert May on his detached Escapement ... 54
IX. Mr. William Melvine on his detached Escapement for Chronometers 58
X. Mr. T. Judge on a self-adjusting Pendulum 62
XI. Mr. Robert Mottershead on an expanding Piston for High-pressure Steam-Engines..... 64
XII. Mr. Joseph Clement on his improved Turning-Lathe 67
XIII. Mr. Andrew Smith on his Lever-Cramp..... 105
XIV. Mr. T. Chapman on his Carriage for Mr. Palmer's patent Railway 109
XV. Mr. J. Castell on his duplex Cock for bottling Wine 111
XVI. Mr. T. E. Bonner on a safe Lock 114
XVII. Mr. G. Gibson on a Spoon for administering Medicine 117
XVIII. J. P. Holmes, Esq. on improved Obstetrical Instruments 118

MANUFACTURES.

I. Mr. R. Lloyd on his Sheet Cork..... 128
II. C. T. Tower, Esq. on a Shawl made of English Cashmere Wool 129

COLONIES AND TRADE.

PAGE

I. G. Blaxland, Esq. on Wine from New South Wales.. 133

II. W. Green, Esq. on certain Pigments, the produce of Canada..... 135

III. Rev. L. Guilding, B.A. F.L.S. F.G.S. &c. on Insects that infest the Sugar-cane in the West Indies.... 143

LIST OF PLATES.

1. J. P. Holmes, Esq. his Obstetrical Instruments.
   Mr. G. Gibson's Spoon for administering Medicine.
   Mr. G. Jackson's Apparatus for instantaneous Light.
2. Mr. R. May's Watch-Escapement.
3. Mr. W. Melvine's detached Escapement for Chronometers.
   Mr. T. Judge's Self-adjusting Pendulum.
4. C. H. Ackerley (Lieut. R. N.) his Safety-Rods for Ships' Boats.
   Mr. J. Higgins's Revolving Lights for Steam-Boats.
5. H. W. Hood, Esq. (Commander R.N.) his Floating-Bridge to communicate between a Ship and the Shore.
6. Mr. A. Bain's Movable Stamps for Book-binders.
   Mr. W. Hilton's Ladder-Crane.
   Mr. R. Mottershead's expanding Piston for High-pressure Steam-Engines.
7. Mr. J. Castell's improved Cock for bottling Wine.
   Mr. J. Dowie and Mr. A. Black's improved Machine for Boot and Shoe-makers.
8. Mr. A. Smith's Lever-Cramp.
9. Mr. T. E. Bonner's Door-Lock.
10. 11. Mr. Jos. Clement's improved Turning-Lathe.
12. Rev. L. Guilding's Communication respecting the Insects which infest the Sugar-cane.

PREMIUMS

OFFERED IN THE SESSION

1828—1829.

A LIST OF THE OFFICERS OF THE SOCIETY.

PRESIDENT,

HIS ROYAL HIGHNESS PRINCE AUGUSTUS FREDERICK
DUKE OF SUSSEX, K.G., &c. &c.

VICE-PRESIDENTS.

JOHN Duke of BEDFORD, F.S.A.
HUGH Duke of NORTHUMBERLAND, F.R.S. and F.S.A.
GEORGE GRANVILLE LEVESON Marquess of STAFFORD, K.G.
ROBERT Earl of LIVERPOOL, K.G. F.R.S.
CHARLES Earl of ROMNEY, F.R.S.
WILLIAM Earl of RADNOR, F.R.S. F.S.A.

JOSEPH HUME, Esq. M.P. F.R.S.
WILLIAM TOOKE, Esq. F.R.S.
THOMAS HOBLYN, Esq. F.R.S. F.H.S.
Sir T. DYKE ACLAND, Bart. M.P. F.G.S.
The Hon. G. A. ELLIS, M.P. F.R.S. F.S.A.

DAVID POLLOCK, Esq.
WILLIAM Viscount LOWTHER, F.S.A.
ARTHUR HOWE HOLDSWORTH, Esq.
Sir GEORGE DUCKETT, Bart. F.R.S. and S.A. F.G.S.
CHARLES TENNYSON, Esq. M.P.

CHAIRMEN OF COMMITTEES.

Accounts.

WILLIAM LUMLEY, Esq.
W. H. BODKIN, Esq.

Correspondence and Papers.

RICHARD HORSMAN SOLLY, Esq. F.R.S. F.S.A. F.H.S. &c.
JOHN BOSTOCK, M.D. F.R.S. F.G.S. &c.

Polite Arts.

JAMES SAVAGE, Esq.
WILLIAM BROCKEDON, Esq.

Agriculture.

GEORGE AIKIN, Esq.
JOHN THOMAS MAYNE, Esq.

Manufactures.

THOMAS WINKWORTH, Esq.
GEORGE COTTAM, Esq.

Mechanics.

TIMOTHY BRAMAH, Esq. F.H.S.
JAMES JONES, Esq.

Chemistry.

MICHAEL FARADAY, Esq. F.R.S. F.G.S.
HENRY HENNELL, Esq.

Colonies and Trade.

GEORGE TWINING, Esq.
T. M. BAGNOLD, Esq.

Miscellaneous Matters.

EDWARD BINYON, Esq.
HENRY SASS, Esq.

Secretary, ARTHUR AIKIN, Esq. F.L.S. F.G.S.
Assistant-Secretary, Mr. THOMAS WOODFALL.
Housekeeper, Miss A. B. COCKINGS.
Collector, Mr. JOSEPH CHATER.

ADVERTISEMENT TO THE PUBLIC.

THE chief object of the Society is to promote the Arts, Manufactures, and Commerce of this Kingdom, by giving honorary or pecuniary Rewards, as may be best adapted to the case, for the communication to the Society, and through the Society to the Public, of all such useful Inventions, Discoveries, and Improvements, (whether specified in these Premiums or not,) as tend to that purpose: in pursuance of this plan, the Society have already expended upwards of a *Hundred Thousand Pounds*, derived from voluntary Subscriptions and Legacies.

The Meetings of the Society are held every Wednesday, at seven o'clock in the evening, from the first Wednesday in November to the second Wednesday in June. The Committees meet on other evenings in the week during the session, for the purpose of taking into consideration the subjects referred to them by the Society. A person desirous of becoming a Member of the Society may be proposed according to the following form, which must be signed by three members of the Society, and delivered in to the Secretary:

A. B. [*Trade, profession, or designation of the Candidate,*] proposed as a Member of the Society for the Encouragement of Arts, Manufactures, and Commerce, by

C. D.
E. F.
G. H.

[*Date.*]

Peers of the realm, or lords of parliament, are, on their being proposed, immediately balloted for; the names of other persons proposed to become members are read by the Secretary to the Society, and are then inserted in lists which are hung up in the Society's room; they are balloted for at the second following ordinary meeting. In both cases, if two-thirds of the members then voting ballot in their favour, they are deemed perpetual members upon payment of not less than twenty guineas in one sum, or subscribing members upon payment of any sum not less than two guineas annually.

Ladies are eligible as members of the Society, and alone are entitled to vote by proxy at elections, through the medium of any gentleman who is a member, on his producing a written authority for the same.

Members are entitled to vote and assist in all the business of the Society and of the several committees. They have also the privilege of recommending two persons as visitors at the meetings of the Society; and, by addressing a note to the housekeeper, of introducing their friends on any week day, except Wednesday, between the hours of ten and two, to examine the various models, machines, and productions, in different branches of arts, manufactures, and commerce,

for which rewards have been bestowed; also to inspect the magnificent series of moral and historical paintings, executed by the late J. Barry, Esq., which, with some valuable busts, statues, portraits, &c. decorate the public rooms of the Society.

Members have the use of the Society's library, which is valuable, and annually increasing by the purchase and donation of scientific and useful books, and of engravings. Contributions from members and others, in augmentation of the library, and of the collection of maps and prints, will be thankfully received, and duly acknowledged in the annual volume of the Society's Transactions, to a copy of which every member is entitled.

☞ To persons inclined to leave a sum of money to this Society by will, the following form is offered for that purpose:—

ITEM.—I give and bequeath to A. B. and C. D. the sum of upon condition, and to the intent, that they, or one of them, do pay the same to the collector, for the time being, of a Society in London, who now call themselves *the Society for the Encouragement of Arts, Manufactures, and Commerce;* which said sum of I will and desire may be paid out of my personal estate, and applied towards carrying on the laudable designs of the Society.

The Society desire it to be clearly understood, that, as a body, they are not responsible for any opinion or representation of facts contained in their volumes. And the public are requested to guard against imposition from persons advertising as having patents for articles rewarded by the Society; they are also cautioned against purchasing articles sold under the pretended sanction of the Society's name.

The Society have lately published the 45th volume of their Transactions, which may be had by members, on application to the housekeeper. Complete sets of their Transactions, or any single volume, may be purchased at the Society's house; where may be had also,

An *Analytical Index of the first twenty-five volumes* of the Transactions, to the termination of the session, June 1807, price 1*s*.

Ditto continued to the end of the 40th volume, price 1*s*.

A catalogue of books in the Society's library, price 1*s*.

A description of Mr. Barry's paintings in the great room of the Society, *gratis*.

All communications are to be made by letter, addressed to ARTHUR AIKIN, Esq. the Secretary, at the Society of Arts, &c. Adelphi, London; and where articles are sent by sea for the Society, the bills of lading are to be addressed to the care of WILLIAM VAUGHAN, Esq. 70, Fenchurch Street, London, who has undertaken to receive them for the Society.

GENERAL NOTICE TO CANDIDATES.

The great object of the Society, in rewarding individuals, is to draw forth and give currency to those inventions and improvements which are likely to benefit the public at large. Candidates are therefore requested to observe, that if the means by which the respective objects are effected require an expense or trouble too great for general purposes, the Society will not consider themselves bound to give the offered reward; but though they expressly reserve the power, in all cases, of giving such part only of any premium as the performance shall be adjudged to deserve, or of withholding the whole if there be no merit, yet the candidates may be assured the Society will always judge liberally of their several claims.

The Society by no means restrict their liberality to the subjects for which premiums are specially offered, but will take into consideration, and will reward by a bounty proportioned to its merit, any communication, the subject of which is of a practical nature, and calculated to promote the public good.

All communications are to be made by letter, addressed to the Secretary; and are to contain full and particular details, according to the nature of the subject, as well as accurate descriptions of such drawings and models as form part of the communication: the models to be sent *carriage paid.*

In those cases in which certificates are required to be produced in claim of premiums, they should be expressed, as nearly as possible, in the words of the conditions attached to the respective premiums, and be signed by disinterested persons, who have a positive knowledge of the facts stated.

The premiums are designed for the United Kingdom, unless expressly mentioned to the contrary: but no claim will be attended to unless the previous conditions have been fully complied with.

No person shall receive any premium, bounty, or encouragement, from the Society, for any matter for which he has obtained any premium or reward from any other society, or for which he has obtained, or purposes to obtain, a patent: it being a condition stipulated with every candidate, that all articles rewarded by the Society shall be freely given up to the public, to be made or manufactured by any person whomsoever.

All models, the production of which is attached as a condition to any premium, shall, upon delivery of such premium, remain the property of the Society.

Where premiums or bounties are obtained in consequence of specimens produced, the Society will retain such part of those specimens as they may judge necessary, making a reasonable allowance for the same.

No member of this Society shall be a candidate for, or entitled to receive, any premium, bounty, or reward whatsoever, except the honorary medals of the Society.

No candidate, not a member, shall be present at any meeting of the Society or committees, or be admitted at the Society's rooms, after having delivered in his claims, until such claims are adjudged, unless summoned by the committee.

A candidate for a premium, or a person applying for a bounty, being detected in any attempt to impose upon the Society, shall forfeit such premium or bounty, and be deemed incapable of obtaining any for the future.

The consideration of the claims for the premiums offered in the present list will take place during the session of the Society commencing on Wednesday the 5th of November, 1828. The several candidates and claimants, to whom the Society shall adjudge premiums or bounties, are to attend on the last Wednesday in May, or such other day as the Society shall appoint, to receive the same; and before that time no premium or bounty will be delivered except to those who are about to leave the kingdom.

In cases where the Society may think fit to admit excuses for not attending in person, deputies may be substituted to receive the rewards, provided such deputies are either members of the Society or superior officers thereof.

CLASS OF AGRICULTURE,*

INCLUDING

PLANTING, GARDENING, AND EVERY BRANCH OF RURAL ECONOMY.

For useful communications on any of these subjects, the Society will give Gold or Silver Medals, or Pecuniary Rewards, varying from Five to Fifty Pounds, according to circumstances: and it is particularly requested that such communications may be sent in not later than the first Monday in March 1829.

The objects to which the attention of the public is more particularly directed are arranged under the following heads:—

I.—IMPROVEMENT OF LAND.

1. Gaining extensive tracts of land from the sea, and bringing the same into cultivation.

2. Bringing into cultivation land previously lying waste.

3. Draining or otherwise improving land already under cultivation.

4. Making actual or comparative experiments on the effect of the substances already used as manures, or on any new substances, as sea-salt, nitre, or other material which may appear adapted to the same purpose.

5. The discovery and application of superior or cheaper means of effecting any of the foregoing objects.

II.—PLANTING FOREST AND FRUIT TREES.

6. Making extensive plantations of forest-trees, particularly on land unfit for other purposes.

7. Making experiments, or communicating information concerning the kinds of trees best adapted for cultivation in different soils and situations, or on the best modes of making and managing plantations, or live and dead fences, or of planting, pruning, and managing fruit trees and orchards, or of securing plantations from injury by hares, rabbits, sheep, and cattle.

8. Introducing new and improved species or varieties of forest or fruit trees, or ornamental shrubs.

The Society will be glad to receive seeds, grafts, or cuttings, for distribution.

9. Successfully and extensively cultivating the white mulberry-tree, for the purpose of feeding silk-worms.

The Society are desirous of ascertaining by experiment whether silk can be profitably raised in this country: the public are referred to a paper on this subject by the late Archibald Stephenson, Esq., in the 43d volume of the Society's Transactions; and which may also be had separate.

III.—CULTIVATION OF CORN AND OTHER PLANTS.

10. Making experiments, or communicating information, on the different methods of growing wheat and other grain, and on the varieties of each, with the modes of culture best adapted to various soils and situations.

11. Communicating similar experi-

---

* Certain inconveniences having been experienced in making the Agricultural Premiums competitory, they have been offered in a more general manner, so that each communication will be judged merely from its own merits, without reference to any other on the same subject.

ments or information on the various native and foreign grasses, clover, lucern, &c., and on the soils best adapted to them respectively.

The public are referred to a communication on an improved variety of ray-grass, published in the 44th volume of the Society's Transactions.

12. Ascertaining the possibility of successfully cultivating straw for making fine Leghorn plat, or procuring information concerning the modes of its cultivation and treatment in Italy.

13. Extensively cultivating the white poppy (*papaver somniferum*), and profitably extracting opium from the same; with a full communication of the means employed, and the results obtained.

14. Successfully cultivating a variety of the field-bean, which will ripen its seed earlier than those at present cultivated, by which the injurious effects of insects may be in some measure avoided, and more time allowed to till the land for the subsequent crop of wheat.—See the 44th volume of the Society's Transactions.

15. Communicating information concerning the cause of, or remedy for, the rotting of the roots of clover in the ground.

16. Communicating new or improved methods of harvesting corn, or making hay in wet seasons.

17. Discovering new or improved means of preserving agricultural produce, particularly roots and plants, during the winter, in a fit state for feeding cattle and sheep in the spring; or of preserving plants, roots, and seeds, fit for vegetation during long voyages.

18. Introducing new and useful vegetables, or producing new and improved varieties of those already in cultivation; or introducing any improvement in managing fruit or kitchen gardens.

19. For any improvement in the method of building, heating, and managing hot-houses or conservatories.

20. Discovering effectual methods of destroying noxious insects and preventing blights, or in any way improving the health of trees or plants.

IV. CATTLE, SHEEP, PIGS, AND OTHER DOMESTIC ANIMALS

21. Communicating new and useful information concerning the breeding, rearing, and feeding of cattle, or other domestic animals, with a view to improve their health or vigour, or to increase either the quantity or quality of the meat, milk, wool, or other produce.

22. Importing, breeding, and rearing, in this country, the Cachemere-shawl goat.

23. Ascertaining the value of salt in feeding cattle, or in improving the quality of hay injured by the weather.

V. AGRICULTURAL MACHINES.

24. Inventing or improving machines for performing, in a superior manner, or at a cheaper rate, any agricultural operations.

CLASS OF CHEMISTRY AND MINERALOGY.

Claims for Premiums in this Department are to be sent in on or before the first Tuesday in February 1829.

Generation of Steam.

25. For the best method of generating steam for engines in such a manner that its quantity or force shall be materially increased beyond the quantity or force of steam obtained by methods at present in practice, without increase of danger or expense; —*the Gold Medal, or One Hundred Pounds.*

Prevention of Smoke.

26. For the best method of effectually preventing the emission of dense smoke from the chimnies of furnaces

and fire-places;—*the Gold Medal, or One Hundred Pounds.*

Certificates to be produced to the Society, that the means proposed have been found to succeed in practice.

Preventing Noxious Vapours in Manufactories.

27. For an effectual method, superior to any in use, and verified by actual trial, of preventing the ill effects arising from noxious fumes disengaged in chemical and other manufacturing processes;—*the Gold Isis Medal, or Thirty Pounds.*

Preventing the Ill Effects of Smelting Ores.

28. For the most effectual method of preventing the ill effects arising to vegetation and animal life, from the sulphureous, arsenical, or other noxious fumes disengaged in smelting the ores of copper, zinc, lead, tin, iron, &c. in the large way; and, if possible, of converting those pernicious fumes to useful purposes, in a manner superior to any hitherto known or in use;—*the Gold Medal, or Fifty Pounds.*

A full account of the process employed will be required, together with certificates of its having been successfully carried into effect.

Fine Bar-Iron.

29. To the person who shall make the greatest quantity of bar-iron, not less than ten tons, with coke, from coke pigs, equal in quality to the best iron imported from Sweden or Russia, and as fit for being converted into steel;—*the Gold Medal, or One Hundred Pounds.*

Samples of the iron, and of the steel made from it, to be produced to the Society; the quantity of the former to be not less than ½ cwt., and of the latter not less than 7 lbs., with certificates that the whole quantity is of equal quality.

Refining Copper from the Ore.

30. For a method of separating, purifying, and refining copper from the ore, so as to render it fit for those purposes to which fine Swedish copper is now applied, and capable of being brought into the market at the same price;—*the Gold Medal, or Fifty Pounds.*

Certificates that not less than three tons have been so prepared and refined; and a quantity not less than 14 lbs. of the copper so refined to be produced to the Society.

Refining Zinc from the Ore.

31. For refining zinc from the ore, by a process superior to any hitherto known or in use, and rendering it fit for the purpose of making fine brass;—*the Gold Isis Medal, or Thirty Pounds.*

Conditions the same as in the preceding.

Preparing Brass.

32. For a method of making brass from materials the produce of Great Britain or Ireland, of superior quality to that commonly manufactured in this country;—*the Gold Isis Medal, or Thirty Pounds.*

A full account of the process, and of the ingredients employed, together with their proportions, and certificates that one ton has been so manufactured, and a sample of the brass, not less than 14 lbs., to be produced to the Society.

Improved Earthenware Crucibles.

33. For manufacturing earthenware crucibles which shall not be liable to crack in the fire, and shall be capable of enduring the action of fluxes, and higher degrees of heat than those now in use, and shall not be too expensive;—*the Gold Isis Medal, or Thirty Pounds.*

A full account of the process to be produced to the Society, and of the materials employed, with satisfactory certificates of the crucibles having been found to answer in use, and specimens of the crucibles, with covers of the same materials.

Improved Melting-pots.

34. For manufacturing melting-pots, for founders in brass, iron, and other metals, superior to those now in use, and not too expensive;—*the Gold Isis Medal, or Thirty Pounds.*

Conditions the same as in the preceding premium.

Purification of Coal Gas.

35. For a method, superior to any now in use, of purifying the inflam-

mable gas procured from coal;—*the Gold Isis Medal, or Thirty Pounds.*

A full account of the process to be produced to the Society, with certificates of its fully answering the intended purpose.

Refining Whale or Seal Oil.

36. For an economical and effectual method of purifying whale or seal oil from the glutinous matter that incrusts the wicks of lamps, and extinguishes the light, though fully supplied with oil; provided that such purified oil resists congelation in an equal degree with the unpurified, and produces an equal degree of light;—*the Gold Isis Medal, or Thirty Pounds.*

A full account of the process to be produced to the Society, with certificates that not less than twenty gallons have been purified according to the process delivered in, together with four gallons of the oil in its unpurified state, and four gallons so refined.

Oil for Chronometers.

37. For a method, verified by actual experiment, of rendering oil more fit than any now in use for chronometers and watches, particularly in being less liable to become thick or rancid;—*the Gold Isis Medal, or Thirty Pounds.*

A full account of the experiments to be produced to the Society, and of the process employed, with satisfactory certificates, together with a specimen of the oil.

Crown Glass.

38. To the person who shall make crown or window glass equally transparent, and as free from blue and green colour as the best German sheet, and not more expensive;—*the Gold Isis Medal.*

Certificates to be produced to the Society that not less than two cwt. have been made, together with one whole plate and two of the largest squares that can be cut, and a full account of the proportions of the ingredients, and of the process of manufacture.

Flint Glass.

39. To the person who shall invent a process for making flint glass free from veins, as dense and transparent as the best now in use, and quite fit for the purposes of opticians;—*the Gold Medal.*

A full account of the process, with certificates that it has been found to answer on repeated trials; that not less than 20 lbs. have been made; and that object-glasses, at least three and a half inches in diameter, have been manufactured of the same, together with specimens of the glass in its rough and manufactured state, to be produced to the Society.

Indelible Ink.

40. For a method of making a black writing ink, superior to any at present known, and indestructible by chemical applications, and that shall flow freely from the pen;—*the Gold Isis Medal, or Thirty Pounds.*

Certificates that not less than two gallons of such ink have been actually prepared, with a full detail of the process of making it, and two quarts of the ink, to be produced to the Society.

Printers' Ink.

41. For the best composition for printers' ink, superior to any hitherto in use;—*the Gold Isis Medal, or Thirty Pounds.*

Certificates that 112 lbs. of such ink have been made, with a full account of the process employed; and 6 lbs. of the ink, to be produced to the Society.

Copper-plate Printers' Ink.

42. For the best composition for printers' ink, superior to any hitherto known, and fit for the finest kind of copper-plate printing;—*the Gold Isis Medal, or Thirty Pounds.*

Certificates and conditions the same as for the last premium.

Rendering Leather Water-proof.

43. For a method, superior to any now in use, of rendering leather water-proof, without injuring its texture or pliability;—*the Silver Medal, or Fifteen Pounds.*

A full account of the process, with samples of the leather in its unprepared and prepared state, to be produced to the Society.

Preserving Provisions from becoming rancid or rusty.

44. For the best, cheapest, and most efficacious method, superior to any hitherto known, of preserving dry salted provisions from becoming rancid or

rusty; — *the Gold Isis Medal, or Thirty Pounds.*

A full description of the method, with proper certificates that it has been found, on repeated trials, to answer the purpose intended, to be produced to the Society.

45. For a method of curing or preserving meat during long sea voyages, superior to any now in use; — *the Gold Isis Medal, or Thirty Pounds.*

Conditions the same as for the preceding premium.

Preserving Iron from Rust.

46. For a cheap composition, superior to any now in use, which shall effectually preserve from rust wrought iron, either forged or polished; — *the Gold Medal, or Fifty Pounds.*

A full description of the method of preparing the composition, with certificates that the iron has stood at least two years unimpaired, being exposed to the atmosphere during the whole time, with one pound weight of the composition, to be produced to the Society.

Preventing the Dry Rot in Timber.

47. For a method of preventing the dry rot in timber, superior to any hitherto known; — *the Gold Medal, or Fifty Pounds.*

The particulars of the method of prevention, confirmed by repeated experiments, to be produced to the Society.

Preventing Mildew in Paper or Canvass.

48. For a process to be used in the manufacture of paper or canvass, or some application to be made to manufactured paper or canvass, which shall effectually prevent it from becoming mildewed; — *the Gold Medal, or Fifty Pounds.*

A full account of the process employed, with certificates and other evidence of its efficacy, to be communicated to the Society.

Preventing the Destructive Effects from Moths.

49. For a cheap, easy, and effectual method, verified by repeated and satisfactory trials, of preventing the destructive effects occasioned by moths and other insects, in furs, woollens, specimens of natural history, and other articles, superior to any hitherto known or practised; — *the Gold Medal, or Fifty Pounds.*

The accounts, with proper certificates, to be produced to the Society.

Dyeing Silk of a Pink or Rose Colour.

50. For a substitute for safflower in dyeing silk rose and pink, which shall produce a colour equally beautiful and permanent, and at less expense; — *the Gold Isis Medal, or Thirty Pounds.*

The communication, with a full account of the processes employed, and certificates, to be produced to the Society.

Improved Black Dye for Silk or Wool.

51. For a black dye for silk or wool, superior in colour and durability to any at present in use; — *the Gold Isis Medal, or Thirty Pounds.*

A full account of the process, attested by satisfactory certificates, as well as samples of the silk or wool so dyed, to be produced to the Society.

Substitute for the Basis of White Paint for Oil Colours.

52. For the best substitute, superior to any hitherto known, for the basis of white paint for oil colours, equally proper for the purpose as the white lead now employed; such substitute not to be of a noxious quality, and to be afforded at a price not materially higher than that of white lead; — *the Gold Medal, or Fifty Pounds.*

A quantity of the substitute, not less than 10 lbs. weight, with an account of the process used in preparing it, and certificates that at least one cwt. has been manufactured, to be produced to the Society.

Red Pigment.

53. For a red pigment, fit for use in oil and water, equal in tone and brilliancy to the best carmines and lakes now known or in use, perfectly durable, and more economical; — *the Gold Isis Medal, or Thirty Pounds.*

Four ounces of such colour, and a full disclosure of its preparation, to be produced to the Society.

N. B. It is required that the colour should remain unaltered by common exposure to strong day-light, damps, and noxious vapours.

Blue Pigment.

54. For a blue pigment, equal in colour, brilliancy, and durability, to the best ultramarine, and which may be afforded at a cheaper rate;—*the Gold Isis Medal, or Thirty Pounds.*

The conditions are the same as in the preceding premium for the red pigment.

Taking out Stains from White Marble.

55. For effectually removing or correcting natural stains in statuary marble;—*the Gold Medal, or Fifty Pounds.*

A full description of the process, and certificates of its full efficacy on trial, to be produced to the Society.

Substitute for Stone for Lithography.

56. To the person who shall discover and communicate to the Society any substance equally fit for the purposes of lithography with the best German stones;—*the Gold Isis Medal, or Thirty Pounds.*

A full description of the process of preparing or composing the substance, with specimens thereof, to be produced to the Society.

Mineralogical and Geological County Maps.

57. To the person who shall complete and publish the best mineralogical and geological map of any county in the United Kingdom, on a scale of not less than one inch to a mile;—*the Gold Isis Medal, or Thirty Pounds.*

The map, with certificates of its accuracy, to be produced to the Society. One impression of the map to remain the property of the Society.

Mineralogical and Geological Map of Ireland.

58. To the person who shall complete and publish an accurate mineralogical and geological map of Ireland, on a scale of not less than an inch to five miles;—*the Gold Medal, or Fifty Pounds.*

The conditions are the same as in the preceding.

Mineralogical and Geological Map of Scotland.

59. The same premium is offered for a mineralogical and geological map of Scotland, on similar conditions.

N.B. For useful communications on any of the applications of Chemistry to the Arts and Manufactures, the Society will give Gold or Silver Medals, or Pecuniary Rewards, according to circumstances.

CLASS OF POLITE ARTS.

The following Premiums in Polite Arts are offered in five distinct classes:—

Class I. includes Sons and Grandsons of Peers, or of Peeresses in their own right, of the United Kingdom.

Class II. includes Daughters and Grand-daughters of Peers, or of Peeresses in their own right, of the United Kingdom.

Class III. includes Gentlemen who claim as Amateurs.

Class IV. includes Ladies who claim as Amateurs.

Class V. includes Artists, who profess and practise the Arts of Painting, Sculpture, Architecture, or Engraving, or who are pursuing their Studies in contemplation of becoming Artists.

It is required, that the subjects in claim of premiums be delivered in without the names, or any external intimation to whom they belong; that the candidates affix on the front of their performances whatever mark they please, each performance having a different mark, and that the same mark be inscribed on the

outside of a paper sealed up, containing *within* the name and residence, and on the *outside* the sex and age of the candidate, the number of the class to which such candidate belongs, and the number of the premium in claim of which the performance is offered, and whether the candidate has previously received from the Society any and what reward; the name not to be disclosed unless the candidate be successful, or in consequence of a special vote of the Society or Committee.

If a person be a candidate for more than one premium, a separate letter must be sent in with each performance; but no person is allowed to send in more than one performance in claim of the *same* premium.

Human Figure.

60. For the best drawing in chalk, pencil, or Indian ink, copied from any picture, print, or drawing, by persons under the age of sixteen;—*the Silver Isis Medal.* For the next in merit, *the Silver Palette.*

61. For the best outline, drawn from any entire figure of the antique, or cast in plaster, the size of the drawing to be not less than twenty-four inches, to be accompanied with a drawing of a hand and foot the size of life, by persons under the age of eighteen;—*the Silver Medal.* For the next in merit, *the Silver Isis Medal.*

62. For the best finished drawing from any entire antique figure, or from any cast in plaster, the size of the drawing to be not less than twenty-four inches, to be accompanied with a drawing of a hand and foot the size of life, by persons under the age of nineteen;—*the Silver Medal.* For the next in merit, *the Silver Isis Medal.*

63. For the best outline drawing of an entire anatomical human figure, from a model or cast, the size of the drawing to be not less than twenty-four inches, to be accompanied with a drawing of a hand and foot the size of life, by persons under the age of nineteen;—*the Silver Medal.* For the next in merit, *the Silver Isis Medal.*

64. For the best drawing from the living figure, the size of the drawing to be not less than twenty-four inches, by persons under the age of twenty-one;—*the Silver Medal.* For the next in merit, *the Silver Isis Medal.*

65. For the best copy in water-colours from any picture, being a composition of two or more figures, the size of the principal figure not less than nine inches, by persons under the age of twenty-one;—*the Silver Medal.* For the next in merit, *the Silver Isis Medal.*

66. For the best original drawing, being a composition of two or more figures, the principal figure not less than nine inches, by persons under the age of twenty-five;—*the Gold Isis Medal.* For the next in merit, *the Silver Medal.*

67. For the best copy in oil from any picture, being a composition of two or more figures, the principal figure not less than twenty-four inches, by persons under the age of twenty-one;—*the Silver Medal.* For the next in merit, *the Silver Isis Medal.*

68. For the best original painting in oil, being an historical composition, the principal figure not less than twenty-four inches high, and the size of the canvass to be a common half-length (or three feet four inches by four feet two inches); the subject, the discovery of Ulysses by Euryclea:

" She then approaching ministered the bath
To her own king, and at first touch discerned
The token, by a savage boar of old impressed:
That scar, while chafing him with open palms,
The matron knew; she left his foot to fall;
Down dropped his leg into the vase; the brass
Rang, and, o'ertilted by the sudden shock,
Poured forth the water, flooding wide the floor.
Her spirit joy at once and sorrow seized;
Tears filled her eyes, her intercepted voice

Died in her throat; but with a trembling hand
Stretched forth to clasp his beard, at length she spoke,
'Thou art himself, Ulysses!'"
Homer's Odyssey, Cowper's Translation, xix. 473.

by persons under the age of twenty-five;—*the Gold Medal.* For the next in merit, *the Gold Isis Medal.*

69. For the best original painting in oil, being an historical, poetical, or other composition, of not less than three figures; the size of the canvass to be a common half-length (or three feet four inches by four feet two inches), by persons under the age of twenty-five;—*the Gold Medal.* For the next in merit, *the Gold Isis Medal.*

Heads or Portraits.

70. For the best drawing of a head, copied from any picture, drawing, or print, by persons under the age of sixteen;—*the Silver Isis Medal.* For the next in merit, *the Silver Palette.*

71. For the best finished drawing of a head, not less than the size of life, from any bust, by persons under the age of eighteen;—*the Silver Medal.* For the next in merit, *the Silver Isis Medal.*

72. For the best painting in oil, from an antique bust or cast, by persons under the age of nineteen;—*the Silver Medal.* For the next in merit, *the Silver Isis Medal.*

73. For the best original painting in water-colours of a portrait, or group of portraits, by persons under the age of twenty-one;—*the Gold Isis Medal.* For the next in merit, *the Silver Isis Medal.*

74. For the best portrait in miniature, in water-colours, being a copy, by persons under the age of twenty;—*the Silver Medal.* For the next in merit, *the Silver Isis Medal.*

75. For the best original portrait in miniature, in water-colours, by persons under the age of twenty-five;—*the Gold Isis Medal.* For the next in merit, *the Silver Medal.*

76. For the best copy, in oil, of a portrait, by persons under the age of nineteen;—*the Silver Medal.* For the next in merit, *the Silver Isis Medal.*

77. For the best original painting in oil, of a portrait, by persons under the age of twenty-five;—*the Gold Isis Medal.* For the next in merit, *the Silver Medal.*

Models.

78. For the best model in bas-relief, from any entire antique figure or cast in plaster, the size of the model not less than twenty-four inches, by persons under the age of eighteen;—*the Silver Isis Medal.* For the next in merit, *the Silver Palette.*

79. For the best model in bas-relief, from the living figure, by persons under the age of twenty-one, the model not less than twenty-four inches;—*the Silver Medal.* For the next in merit, *the Silver Isis Medal.*

80. For the best model of a bust from the antique, of a different size from the original, by persons under the age of twenty-one;—*the Silver Medal.* For the next in merit, *the Silver Isis Medal.*

81. For the best model of a bust from nature, of the size of life, by persons under the age of twenty-one;—*the Silver Medal.* For the next in merit, *the Silver Isis Medal.*

82. For the best model in the round, from an entire antique figure, the model not less than twenty-four inches high, by persons under the age of twenty-one;—*the Silver Medal.* For the next in merit, *the Silver Isis Medal.*

83. For the best original model of a single figure, not less than twenty-four inches high, by persons under the age of twenty-five;—*the Gold Isis Medal.* For the next in merit, *the Silver Medal.*

84. For the best original model of a group, the subject *Orlando and the Wrestler*, from Shakspeare's "As you like it:" the figures not less than twenty-four inches, by persons under the age of twenty-five;—*the Gold Medal.* For the next in merit, *the Gold Isis Medal.*

Landscape.

85. For the best drawing of a landscape, copied from any picture, drawing, or print, by persons under the age of eighteen; — *the Silver Isis Medal.* For the next in merit, *the Silver Palette.*

86. For the best original drawing of a landscape from nature, by persons under the age of twenty-one; — *the Silver Medal.* For the next in merit, *the Silver Isis Medal.*

87. For the best original oil painting of a landscape from nature, by persons under the age of twenty-three; —*the Gold Isis Medal.* For the next in merit, *the Silver Medal.*

88. For the best original composition of a landscape painted in oil, by persons under the age of twenty-five; — *the Gold Isis Medal.* For the next in merit, *the Silver Medal.*

89. For the best original marine painting, in oil, of two or more vessels, by persons under the age of twenty-five; — *the Gold Isis Medal.* For the next in merit, *the Silver Medal.*

Flowers or Fruit.

90. For the best painting in water-colours, being a copy, by persons under the age of sixteen; — *the Silver Isis Medal.* For the next in merit, *the Silver Palette.*

91. For the best original composition in water-colours, from nature, by persons under the age of twenty-one; — *the Silver Medal.* For the next in merit, *the Silver Isis Medal.*

92. For the best original composition in oil, painted from nature, by persons under the age of twenty-five; —*the Gold Isis Medal.* For the next in merit, *the Silver Medal.*

Animals.

93. For the best drawing of one or more animals, copied from any picture, print, or drawing, by persons under the age of sixteen; — *the Silver Isis Medal.* For the next in merit, *the Silver Palette.*

94. For the best original drawing from nature of one or more animals, by persons under the age of twenty-one; — *the Silver Medal.* For the next in merit, *the Silver Isis Medal.*

95. For the best original painting in oil, of a group of not less than three animals, painted from nature, by persons under the age of twenty-five; — *the Gold Isis Medal.* For the next in merit, *the Silver Medal.*

Still-life.

96. For the best original composition, painted in oil or water-colours, of three or more such subjects as are usually called still-life, by persons under the age of twenty-one; —*the Silver Medal.* For the next in merit, *the Silver Isis Medal.*

Drawings of Machinery.

97. For the best perspective drawing of machinery, by persons under the age of twenty-one; — *the Silver Medal.* For the next in merit, *the Silver Isis Medal.*

Enamel Painting.

98. For the best enamel painting of a head, by persons under the age of twenty-three; — *the Silver Medal.* For the next in merit, *the Silver Isis Medal.*

99. For the best historical painting in enamel, by persons under the age of twenty-five; — *the Gold Isis Medal.* For the next in merit, *the Silver Medal.*

Carving in Wood.

100. For the best carving in wood of fruit or flowers, not less than nine inches high, by persons under the age of twenty-one; — *the Silver Medal.* For the next in merit, *the Silver Isis Medal.*

101. For the best carving in wood, of one or more animals, the size of the animal not less than eight inches, by persons under the age of twenty-three; — *the Silver Medal.* For the next in merit, *the Silver Isis Medal.*

102. For the best carving in wood, of one or more human figures, not less than a foot in height, by persons under the age of twenty-five; — *the Gold Isis Medal.* For the next in merit, *the Silver Medal.*

103. For the best carving in wood, of any enriched border or ornament, from the carver's own design;—*the Gold Isis Medal.* For the next in merit, *the Silver Medal.*

Etching.

104. For the best free etching in historical composition, by persons under the age of twenty;—*the Silver Medal.* For the next in merit, *the Silver Isis Medal.*

105. For the best free etching of a landscape, by persons under the age of twenty;—*the Silver Isis Medal.* For the next in merit, *the Silver Palette.*

106. For the best free etching in historical composition, by persons under the age of twenty-five;—*the Gold Isis Medal.* For the next in merit, *the Silver Medal.*

107. For the best free etching of a landscape, by persons under the age of twenty-five;—*the Silver Medal.* For the next in merit, *the Silver Isis Medal.*

Finished Engravings on Steel or Copper.

108. For the best finished engraving in historical composition, by persons under the age of twenty-five;—*the Gold Medal.* For the next in merit, *the Gold Isis Medal.*

109. For the best finished engraving of a landscape, by persons under the age of twenty-five;—*the Gold Isis Medal.* For the next in merit, *the Silver Medal.*

110. For the best finished engraving of a portrait, by persons under the age of twenty-five;—*the Gold Isis Medal.* For the next in merit, *the Silver Medal.*

Engraving on Blocks.

111. For the best engraving on wood or metal blocks, of an historical subject, the size of the principal figure not less than six inches in height, and the block to be at least twelve inches by nine;—*the Gold Isis Medal.*

Two or more impressions, with the block, to be produced to the Society. The impressions, but not the block, to remain the property of the Society.

Lithography.

112. For the best account of the process employed in lithography, superior to any hitherto known to the public;—*the Gold Isis Medal, or Thirty Pounds.*

The particulars of the process, accompanied by specimens of the art, and of the materials employed, with all other necessary information, to be produced to the Society on or before the first Tuesday in March, 1829.

113. For the best method of transferring drawings from the paper to the stone, for the purpose of lithography, superior to any hitherto in use;—*the Silver Medal, or Twenty Pounds.*

A complete account of the process employed, with specimens of the materials, to be produced to the Society. Two specimens of the impression to remain with the Society.

Medal Die Engravings.

114. For the best die engraving, either of a head or single figure, after the engraver's own design or model, by persons under the age of twenty-one;—*the Gold Isis Medal.* For the next in merit, *the Silver Medal.*

115. For the best die engraving of a group, after the engraver's own design and model, by persons under the age of thirty;—*the Gold Medal.* For the next in merit, *the Gold Isis Medal.*

The dies, with two impressions or casts, and the model, in each claim for medal die sinking, are to be produced to the Society; and the impressions or casts to remain the property of the Society.

116. To the person who shall discover and communicate to the Society a method of making and hardening medal dies, superior to any hitherto known, and which shall prevent the surface of the die from being cracked, scaled, warped, or otherwise injured;—*the Gold Medal, or Thirty Pounds.*

A full and detailed account of all the processes required to produce the effect, with certificates of their successful application, to be delivered to the Society.

Gem Engraving.

117. For the best engraving in in-

taglio or cameo, of a head or single figure, on cornelian or other hard stone, being a copy;—*the Silver Medal.* For the next in merit, *the Silver Isis Medal.*

118. For the best engraving in intaglio or cameo, of a head or figure, after the engraver's own design and model, on a cornelian or other hard stone;—*the Gold Isis Medal.* For the next in merit, *the Silver Medal.*

119. For the best engraving in intaglio or cameo, of a group, after the engraver's own design and model, on cornelian or other hard stone;—*the Gold Medal.* For the next in merit, *the Gold Isis Medal.*

Premiums for Medical or Surgical Students.

120. For the best coloured anatomical model of a dissected limb, or other part of the human body, in wax or other substance;—*the Gold Medal.*

121. For the best original drawing (made from actual dissection) of the anatomy of the human body, or of any part thereof, sufficiently full and accurate for the purposes of surgery, such drawing to be not less than the natural size of the parts, by persons under the age of twenty-five;—*the Silver Medal.* For the next in merit, *the Silver Isis Medal.*

It is required that each model and drawing be accompanied by an outline, with the necessary references to render them intelligible.

PREMIUMS FOR THE YEAR 1829.

Architecture.

All claims must be sent in on or before the third Tuesday in January 1829.

122. For the best drawing in perspective of the capital in the centre of the Chapter House of Westminster Abbey, not less than eighteen inches high, by persons under twenty-one years of age;—*the Silver Medal.* For the next in merit, *the Silver Isis Medal.*

123. A similar premium is offered, on the same conditions, for the best drawing from any other example of an enriched Gothic capital.

124. For the best drawing in perspective of the north end of Westminster Hall (in Palace Yard), from actual elevations taken by measurement, and projected according to rule, drawn on large elephant paper, by persons under the age of twenty-one;—*the Silver Medal.* For the next in merit, *the Silver Isis Medal.*

125. For the best drawing, being an original composition, of foliage or other ornament, adapted to the decorative purposes of architecture;—*the Gold Isis Medal.* For the next in merit, *the Silver Medal.*

126. For the best design of a palace in the Gothic style, adopting as a basis for the arrangements the ideas suggested by Lord Bacon in his essay entitled "Of Building;"—*the Gold Medallion.* For the next in merit, *the Silver Medal.*

The drawings sent in for this premium must consist of one or more plans, elevations, sections, and perspective views, with separate drawings of such parts as may be necessary to give a complete representation of the design. The drawings to be made on a scale of one-twelfth of an inch to a foot; the perspective view, and the particular parts, on a larger scale if necessary.

127. For the best original model of foliage or other ornament adapted to architectural decoration, not less than two superficial feet;—*the Gold Isis Medal.* For the next in merit, *the Silver Medal.*

128. For the best model, being a copy of a Gothic architectural ornament from Rochester Cathedral, in the possession of L. N. Cottingham, Esq., by persons under the age of twenty-one;—*the Silver Medal.* For the next in merit, *the Silver Isis Medal.*

Persons intending to become competitors for this premium, are desired to make application to the Secretary for an introduction to Mr. Cottingham.

PREMIUMS FOR THE YEAR 1830.

All claims for the following Premiums must be sent in to the Society on or before the third Tuesday in January 1830.

129. For the best drawing in perspective from a Corinthian or other or-

namented capital, not less than eighteen inches high, by persons under twenty-one years of age;—*the Silver Medal.* For the next in merit, *the Silver Isis Medal.*

130. For the best drawing of an original composition of foliage or other ornament adapted to the decorative purposes of architecture;—*the Gold Isis Medal.* For the next in merit, *the Silver Medal.*

The drawing to remain the property of the Society.

131. For the best original model of foliage or other ornament adapted to architectural decoration, not less than two square feet of surface;—*the Gold Isis Medal.* For the next in merit, *the Silver Medal.*

132. For the best perspective drawing of the north porch of Westminster Abbey, from actual elevations taken by measurement, and projected according to rule, drawn on large elephant paper, by persons under the age of twenty-one;—*the Silver Medal.* For the next in merit, *the Silver Isis Medal.*

133. For the best design for a village church in the Gothic style;—*the Gold Medallion.* For the next in merit, *the Silver Medal.*

The following inscription to be engraved on the medallion; "*The premium given by the Society for the Encouragement of Arts, Manufactures, and Commerce, in conformity to the will of John Stock, Esq., of Hampstead.*"

The drawing sent in for this premium to consist of one or more plans, elevations, sections, and perspective views, with separate representations of such parts as may be necessary to give a complete explanation of the design. The drawings to be made on a scale of one-twelfth of an inch to a foot; the perspective view, and the particular parts on a larger scale if necessary.

134. For the best design for an entrance into the Park at the bottom of St. James's Street;—*the Gold Isis Medal.*

Conditions the same as for the preceding.

135. For the best design for a fountain in the centre of the buildings erecting on the site of Carlton palace;—*the Gold Isis Medal.*

Conditions the same as for the preceding.

Conditions for the Polite Arts.

All performances in claim of the above premiums, except those relating to architectural subjects, are to be produced to the Society on or before the first Tuesday in March 1829, and none can be received after that day.

No candidate, under any pretence whatever, shall be allowed to retouch or varnish a performance after it has been received by the Society.

No candidate having received a premium or bounty, shall receive an equal reward in the same class, or any reward in an inferior class, of the same department of art. Nor shall any bounty be given lower than one degree below the lowest of the premiums offered in each article.

No candidate shall receive more than one premium or bounty in the same year.

All performances, to which premiums or bounties are adjudged, shall remain with the Society until after the second Wednesday in June 1829, when they will be re-delivered, unless mentioned in the premiums to the contrary.

No performance shall be admitted that has obtained a reward from any other society or academy.

All performances must have been executed within the year previous to their being sent in to the Society, except the finished engravings, which must have been executed within two years.

No performance can be received which does not come into one of the foregoing articles, and which does not agree with the conditions of such article, except by a particular recommendation from the committee, and confirmed by the Society, that it is deserving of being made an exception to the general rule, and in such case a bounty may be given.

To prevent attempts to impose on the Society, by producing drawings made or retouched by any other person than the candidate, the Society require a specimen of the abilities of each successful candidate to be made under the inspection of the Committee of Polite Arts.

All copies are to be on a different scale from the original; and, if pos-

sible, the original is to be sent with the copy.

The Society reserve to themselves the power of giving medals of less value than those proposed; or of withholding them altogether in cases where the performance shall be deemed undeserving of reward. But if there should be, in claim of the same premium, more than two works of merit, deserving encouragement, the committee is allowed to recommend at the same time to the Society that a bounty be given; and in case of the second premium offered being the lowest reward which the Society gives, such lowest reward may be repeated as a bounty.

In consideration of the great number of premiums here offered, embracing so many departments of the fine arts, no bounty can be given, except by a special recommendation in cases of extraordinary merit; the reason of such recommendation to be particularly stated in the report of the Committee.

CLASS OF MANUFACTURES.

Claims for the following premiums are to be sent in on or before the second Tuesday in February 1829.

Fine Wool.

136. To the person who shall have produced from his own flock, in the year 1827, the greatest quantity, not less than five cwt. of wool equal to the Spanish merino, and as fit for the purpose of being manufactured into superfine cloth;—*the Gold Medal.*

Certificates, along with samples of the wool, and of the cloth manufactured from it, to be produced to the Society.

137. For the next greatest quantity, not less than two hundred and fifty pounds;—*the Silver Medal,* on similar conditions.

Transparent Paper for Tracing.

138. For a method of making transparent paper, better than any hitherto in use, and that shall take and bear common writing-ink with the same facility and correctness as writing-paper;—*the Silver Medal, or Twenty Pounds.*

Certificates of the making such paper, an account of the process, and one quire of the paper, to be produced to the Society.

Leather for Gloves.

139. For a process superior to any now in use, for preparing, dyeing, and finishing skins for fine gloves, verified by actual experiment, and the communication accompanied with, at least, a dozen pair of gloves made from skins so prepared;—*the Gold Medal, or Thirty Pounds.*

Certificates from competent persons, fully approving of the result of such experiments, together with the gloves and communication, to be produced to the Society.

Hose for Fire-Engines, Brew-houses, &c.

140. For a method of making hose for fire-engines, brew-houses, &c. similar to those used on the continent, made of flax or hemp, or other flexible material cheaper than leather, and equally water-tight;—*the Gold Isis Medal, or Thirty Pounds.*

A full account of the process used in manufacturing it, with certificates of its efficacy in practice, to be produced to the Society.

Thread from Flax.

141. For a method of manufacturing thread from flax grown in the British dominions, of as fine quality as any used on the continent;—*the Gold Medal, or Thirty Pounds.*

Samples of the thread, not less than one pound in weight, and of lace or cambric made therefrom, together with certificates that not less than ten pounds in weight have been manufactured, to be produced to the Society.

Shawls of Cachemere Wool.

142. For a shawl made of Cachemere wool, with the border woven in the piece, which shall be the best imitation of the real Indian shawls made from the same material;—*the Gold Medal, or Thirty Pounds.*

Certificates from competent persons, approving the articles manufactured, with a full account of the process employed therein, to be produced to the Society.

Shawls in imitation of Cachemere.

143. To the person who shall manufacture, of any material except Cachemere wool, and produce to the Society, a shawl, which shall be a better imitation of the real Cachemere shawls than any hitherto made;—*the Gold Medal, or Thirty Pounds.*

Conditions the same as for the preceding.

Winding Silk.

144. For a method better than any hitherto known, of winding raw silk that is in any degree sticky in its gum, or brittle in its texture, without injuring its colour or texture, and at a cost not exceeding that of the ordinary methods;—*the Silver Medal, or Twenty Pounds.*

A full description of the process and apparatus used, and samples of the silk, both in its wound and raw state, together with certificates of the process having answered the required conditions, to be produced to the Society.

Organzine Silk.

145. For a method by which to organzine silk equal in quality to the Italian throw, at an expense less than the current price of throwing;—*the Gold Medal, or Fifty Pounds.*

The communication, with a full description of the process, and models or drawings of the apparatus employed, and samples of the produce, with certificates of the invention answering the required conditions, to be produced to the Society.

Machine for Silk Weaving.

146. For a machine for weaving figured silks, superior in its mode of action, and in the nature and extent of the work it will produce, to any at present known;—*the Gold Medal, or Fifty Pounds.*

Certificates of the performance of the machine, and a model or complete drawing and description of the same to be produced to the Society.

Machine for Weaving Ribands.

147. For a machine for weaving figured ribands, superior in the nature and extent of the work performed to any at present known;—*the Gold Isis Medal, or Thirty Pounds.*

Conditions the same as for the preceding.

Power Looms for Figured Silk or Ribands.

148. For a machine for weaving figured silks or ribands, by which the best sorts of works may be executed, and to which steam, or any similar power, may be applied;—*the Gold Medal, or Fifty Pounds.*

Conditions the same as the last.

British Cambric.

149. For having manufactured, or caused to be manufactured, of flax only, the best specimen of British cambric, not fewer than ten pieces;—*the Gold Isis Medal.*

Certificates, and one piece as a specimen, to be sent to the Society.

CLASS OF MECHANICS.

Claims for the following Premiums to be sent in on or before the last Tuesday in February 1829.

Gunpowder Mills.

150. For the most effectual mode of preventing explosions in gunpowder mills;—*the Gold Medal, or Fifty Pounds.*

A full account of the method to be produced to the Society, with certi-

ficates of its having been put in practice in one or more gunpowder mills in this kingdom, and that it promises, in the opinion of the best judges concerned in such works, to answer the purpose intended.

N. B. As an encouragement to persons to turn their thoughts to improvements of this nature, if any should be made on the present method of conducting the business of gunpowder-making, which fall short of the total prevention of explosion, such bounty or reward will be bestowed on them as they may appear to merit.

Machine for Raising Water.

151. For a machine, on a better, cheaper, and more simple construction than any hitherto known for raising water out of wells, &c. from a depth of not less than fifty feet; — *the Gold Medal, or Thirty Pounds.*

Certificates of the performance of the machine, and a model of it, to be produced to the Society.

Extinguishing Fires.

152. For a method for preventing or extinguishing fire in buildings, superior to any now in use; — *the Gold Medal, or Thirty Pounds.*

Certificates of the method having been practised with success, with a full description thereof, to be delivered to the Society.

This premium is offered in compliance with a recommendation in the will of the late Dr. Anthony Fothergill.

Boring and Blasting Rocks.

153. For a more simple, safe, cheap, and expeditious method than any hitherto known or in use, of boring and blasting rocks in mines, shafts, wells, &c.; — *the Gold Medal, or Thirty Pounds.*

Certificates of the method having been practised with success, with a full description thereof, to be delivered to the Society.

Warming and Ventilating Buildings.

154. For a method of warming and ventilating buildings, superior to and cheaper than any hitherto known or in use; — *the Gold Medal, or Thirty Pounds.*

A model or complete drawing and description of the method, with certificates that it has been successfully practised, to be delivered to the Society.

Ventilating Coal Mines.

155. For a method of ventilating coal mines so as effectually to prevent the accidents liable to arise from the accumulation of carburetted hydrogen and other gases; — *the Gold Medal, or Fifty Pounds.*

A full account of the process, with certificates of its efficacy, to be produced to the Society.

N. B. The Society will be very glad to attend to any communication, which, though not completely effecting the object, appears to offer an approximation to it.

Preventing Accidents from Stage Coaches.

156. For any improvement in the construction of stage coaches, whereby the safety and convenience of the passengers shall be the most effectually secured; — *the Gold Medal, or Thirty Pounds.*

Certificates of its efficacy, with a description and model, to be produced to the Society.

Improving Turnpike and other Roads.

157. For the most effectual and cheapest method, verified by actual experiment, of making an even, hard, and durable carriage-road; — *the Gold Medal, or Thirty Pounds.*

It is required that an accurate account of the method used, and every expense attending it, together with satisfactory certificates of its being effectual, be delivered to the Society.

Preventing Explosion in Steam-Engine and other closed Boilers.

158. To the person who shall invent and discover to the Society a method of rendering closed boilers used for steam-engines and other purposes safer than any now in use, and less liable to accidents from explosion; — *the Gold Medal, or Thirty Pounds.*

Certificates that the method has been found to answer its intended purpose to be produced to the Society.

A superior Screw.

159. For a mode of producing a more accurate micrometer screw than any hitherto known;—*the Gold Medal, or Thirty Pounds.*

A model or complete drawing and description of the method, with a screw not less than twelve inches in length, to be produced to the Society.

Canal Locks.

160. For a plan of a lock for a canal, by which, on the passing of a boat, less water may be expended than has hitherto been the case, and through which a boat may pass in a time not materially longer than is required for passing locks of the usual construction; — *the Gold Medal, or Fifty Pounds.*

Certificates of the plan having been successfully carried into practice, together with a full description, and drawings or models in illustration of the same, to be sent to the Society.

The same premium is offered for the year 1830.

Passing Boats through Tunnels.

161. For a method, superior to any hitherto known, whereby a boat may be impelled or drawn through a tunnel not having a towing-path; — *the Gold Medal, or Thirty Pounds.*

Conditions the same as the last.

CLASS OF COLONIES AND TRADE.

Claims for the following premiums are to be sent in on or before the second Tuesday in March 1829.

It is absolutely necessary that all statements made by candidates residing in the colonies should be authenticated by the certificates of the governor or secretary of the colony, or by the justices of peace, or other competent local authorities.

Cachemere Wool.

162. To the person who shall import the greatest quantity of real Cachemere wool, not less than one cwt., freed from the hair, and in a state fit for spinning;—*the Gold Medal.*

Samples of the wool, not less than five pounds weight, with bills of lading and other necessary documents, to be produced to the Society.

This premium is continued two years longer on similar conditions.

Importing the Cachemere-shawl Goat.

163. To the person who shall have imported into the United Kingdom, subsequent to the 1st of January, 1827, the greatest number, not fewer than three females and two males, of the real Cachemere-shawl goat; — *the Gold Medal.*

Certificates that the goats are of the real Cachemere breed, and that they are in health at the time of making the communication, to be produced to the Society.

This premium is offered also for the years 1830 and 1831.

Nutmegs and Mace.

164. To the person who shall grow the finest sample of nutmegs or mace, of good and merchantable quality, not less than twenty pounds weight, in any part of his Majesty's dominions in the West Indies, or in any British plantation on the coast of Africa, or of the several islands adjacent thereto, or in the island of Sincapore, and equal to those imported from the islands of the East Indies;—*the Gold Medal.*

Satisfactory certificates of the place of growth, with an account of the number of trees, their age, nearly the quantity of fruit on each tree, and the manner of culture, together with samples, to be produced to the Society.

The same premium is offered for the years 1830 and 1831.

Cinnamon.

165. A premium, similar to the preceding, and on the same conditions, is offered for the growth of cinnamon.

Pepper.

166. To the person who shall, previous to the year 1831, raise, in any of the British West Indian islands or colonies, and shall import the largest quantity, not less than 4 cwt., of good and marketable pepper;—*the Gold Medal, or Fifty Pounds.*

167. For the next greatest quantity, not less than two cwt.;—*the Gold Ceres Medal, or Thirty Pounds.*

Conditions the same as for No. 164.

Vanilla.

168. To the person who shall import from any of the British West Indian islands the greatest quantity of Vanilla beans, the produce of such island or colony, equal in quality to those produced in Poyais and on the coast of Mexico;—*the Gold Ceres Medal.*

Conditions the same as for No. 164.

Annatto.

169. To the person who shall import, from any part of the British settlements in the East Indies, the greatest quantity of annatto, equal to that imported from Spanish America, not less than one cwt.;—*the Gold Medal.*

A quantity of the annatto, not less than ten pounds weight, to be produced to the Society, with proper certificates that the annatto is the produce of such settlement.

Silk.

170. To the person who, in the years 1828 or 9, shall raise in any British colony, and shall import, the greatest quantity of silk proper for manufactures, not less than one hundred pounds weight, from silk worms bred there;—*the Gold Medal, or Fifty Pounds.*

Specimens of the silk, not less than one pound, with an account of the method in which the silk-worms were managed, the kind of mulberry-trees whence they were furnished with food, and particulars respecting the culture of the mulberry-trees for that purpose, to be produced to the Society.

171. For the next greatest quantity, not less than fifty pounds, on similar conditions;—*the Silver Medal, or Twenty Pounds.*

Satisfactory certificates of the several particulars above mentioned to be delivered to the Society along with the samples required.

Premiums similar to the two last are specially offered for the colonies of

172—173. The Cape of Good Hope.

174—175. The Mauritius.

176—177. New South Wales.

178. To the person who shall raise, in the East Indies, silk equal to the West Italian or China silk;—*the Gold Medal.*

One pound of the silk to be sent to the Society as a sample, with certificates that at least 100 lbs. of equal quality have been produced. The same premium is offered for the years 1831 and 1832.

Caoutchouc.

179. To the person who shall establish a plantation in any British settlement in Africa, or the West Indies, of any of those trees that produce caoutchouc;—*the Gold Medal.*

A sample of one pound, with certificates that at least twenty pounds of equal quality with the sample have been produced, to be sent to the Society.

Olive Oil.

180. To the person who shall, in the years 1829 or 1830, manufacture and import the finest specimen of oil, not less than ten gallons, the produce of olives grown in any British colony in Africa or New South Wales;—*the Gold Medal.*

181. For the next greatest quantity, not less than six gallons;—*the Silver Medal.*

Specimens of the oil, not less than two quarts, together with satisfactory certificates, to be produced to the Society.

Wine from New South Wales.

182. To the person who shall import, in the years 1828 or 1829, the finest wine, not less than one pipe,

of good marketable quality, made from the produce of vineyards in New South Wales;—*the Gold Medal.*

Samples of the wine, in bottles, bills of lading, and certificates that the wine was made in the colony, to be produced to the Society.

Dried Fruits.

183. To the person who shall prepare and import into Great Britain the greatest quantity, not less than 100 lbs. of dried fruits, similar to those now imported from the Mediterranean, of good quality, and the growth of the colony of New South Wales; — *the Gold Ceres Medal.*

Satisfactory certificates that the fruits were grown and prepared in the colony, with samples of the fruits, to be presented to the Society.

This premium is also extended to 1830 and 1831.

The same premium, on similar conditions, is offered for the colonies of—

184. The Cape of Good Hope.

185. The Mauritius.

Cultivation of Tea.

186 To the person who shall grow and prepare the greatest quantity of China tea, of good quality, not being less than 20 lbs. weight, in the island of Jamaica, or in any other British West India colony, and shall import the same into Great Britain; — *the Gold Medal, or Fifty Pounds.*

Satisfactory certificates that such tea was grown and prepared in the colony; together with an account of the number of tea-trees, their age, mode of culture, of gathering, drying, and preparing the leaves, and samples of the tea, to be produced to the Society. This premium is also extended to 1830.

China Tea.

187. To the person who shall communicate to the Society, from information obtained in China, the best and most authentic account of the culture of the plant or plants, the leaves of which furnish the different kinds of tea; together with the methods of gathering, drying, and otherwise preparing the leaves;— *the Gold Medal.*

This premium is extended to the years 1830 and 1831.

Cinchona.

188. To the person who shall communicate to the Society the best account of one or more of the species of cinchona, the bark of which is used in medicine, accompanied by specimens of the tree in leaf, flower, and seed; and not less than 10 lbs. of the bark ;—*the Gold Medal.*

It would be desirable to have some of the seeds sent over in a state fit for vegetation, for which purpose it is recommended that they should be packed in fresh-burnt charcoal powder, and wrapped up in coarse brown paper.

Cultivation of Hemp in Upper and Lower Canada, Nova Scotia, and New Brunswick.

189. To the person who shall sow with hemp the greatest quantity of land in the above-mentioned provinces, not less than six arpents, (each four-fifths of a statute acre) in the year 1828, and shall at the proper season cause to be plucked the summer hemp (or male hemp bearing no seed), and continue the winter hemp (or female hemp bearing seed) on the ground until the seed is ripe; — *the Gold Medal, or Fifty Pounds.*

190. To the person who shall sow with hemp the next greatest quantity of land in the same provinces, not less than five arpents, in the year 1828, in the manner above mentioned; —*the Silver Medal, or Twenty-five Pounds.*

Certificates of the number of arpents, the method of culture, of the plucking of the hemp, with a general account whether sown broad-cast or in drills, and of the expense, soil, cultivation, and produce, to be transmitted to the Society, together with 28 lbs. of the hemp, and two quarts of the seed.

The same premiums are offered for the year 1829.

Importation of Hemp from Canada, Nova Scotia, and New Brunswick.

191. To the person who shall im-

port to this country the greatest quantity of marketable hemp, not less than one hundred tons, in the year 1829, the produce of Canada, or of one of the above-mentioned provinces;—*the Gold Medal.*

Substitute for Hemp.

192. To the person who, in the years 1828, or 1829, shall raise at the Cape of Good Hope, in New South Wales, or in any of the British colonies, and import, a substitute for hemp, not less than two tons, equally cheap, strong, durable, and applicable to all the purposes for which hemp is now used;—*the Gold Medal.*

A quantity of the substitute, not less than 20 lbs., together with the proper certificates, to be produced to the Society.

The Society particularly direct the attention of the public to the phormium tenax, or New Zealand flax.

The same premiums are offered for the year 1830.

China Paper for Copper-plate Printing.

193. To the person who shall communicate to the Society the best account of the process employed in China for the manufacture of paper used in England for copper-plate printing, and known by the name of India paper, together with an account of the materials from which such paper is made;—*the Gold Medal, or Fifty Pounds.*

Specimens of the paper, not less than one ream, with samples of the materials in their raw or unmanufactured state, and satisfactory certificates, to be produced to the Society.

Diminution of Human Labour in the Cultivation of Sugar, &c.

194. To the person who shall present to the Society a satisfactory account, founded on experience, of the most advantageous mode of diminishing the labour of persons employed in the cultivation of sugar, cotton, and coffee, in the West Indian colonies, by the substitution of agricultural machinery, or by the use of cattle;—*the Gold Medal.*

Extirpating the Stumps and Roots of Trees.

195. To the person who shall invent and discover to the Society the best method, verified by actual experience, of raising out of the earth and removing the stumps and roots of trees which have been left after felling the timber, so as to clear the land for the purposes of cultivation;—*the Gold Medal, or Fifty Pounds.*

Certificates that the method has succeeded with at least fifty trees of large girth, and a full description of the means employed, to be delivered to the Society.

BRITISH MARBLES.

The Society, considering that it would be beneficial to the commerce of the United Kingdom to bring the British marbles into general use, and that the most effectual method of accomplishing their object would be, *for the present*, to make them more generally known in the capital, have come to the following resolution:—

That specimens of British marbles be exposed in the Society's room, in the Adelphi, for the inspection of the public, under the following regulations:—

1st, That all the specimens be exact to a given size, viz. eight inches high, six inches broad, one thick, and polished on one face.

2d, That a book be kept, containing the number of each specimen, and describing the situation of the quarry, the name and situation of the parish, the distance of the quarry from a beaten road, and the distance of that road from water-carriage, with the name of the donor and proprietor. Any remarks on the qualities of the marbles, or on the lime produced from them, will be gratefully received, and preserved by the Society as materials for future inquiries.

As the exertions of the Society can be generally beneficial only inasmuch as their views are seconded by the public, the Society request, that all proprietors of marble quarries will favour them with a specimen of the marble, worked to the exact size above mentioned, with the description of the quarry as above, that the same may be entered in the book to be preserved for the use of the public. By such arrangements, it is expected, that the interest of the proprietors of the quarries will be promoted, and the use of British marble much extended. A variety are already exhibited in the Society's rooms.

REWARDS

BESTOWED BY THE SOCIETY DURING THE SESSION, 1827-8.

IN AGRICULTURE.

1. To Lord Newborough, for planting above 3,700,000 forest-trees on his estates in Caernarvonshire and Denbighshire, the large Gold Medal.

2. To Joseph Houlton, Esq. Grove-place, Lisson-grove, for introducing the roots of stachys palustris as an esculent vegetable, the Silver Ceres Medal.

IN CHEMISTRY.

3. To Mr. George Jackson, 30, Church-street, Spitalfields, for his apparatus for instantaneous light, the Silver Isis Medal.

4. To Mr. T. Cogan, 399, Rotherhithe-wall, for his method of purifying linseed and rape oils, the Silver Isis Medal and 10*l.*

IN MECHANICS.

5. To Mr. L. Hebert, 19, Queen-street, Chelsea, for his prepared plumbago to be used instead of oil for chronometers, the Gold Isis Medal.

6. To Mr. W. Melvine, 22, Ironmonger-lane, Cheapside, for his detached escapement for chronometers, the large Silver Medal.

7. To Mr. T. Judge, New End, Hampstead, for his self-adjusting pendulum, the large Silver Medal and 5*l.*

8. To Mr. R. May, New-road, Deptford, for his watch-escapement, the large Silver Medal and 5*l.*

9. To C. H. Ackerley, Lieut. R.N. for his safety-rods for ships' boats, the large Silver Medal.

10. To J. Higgins, Esq. 370, Oxford-street, for his revolving lights for steam-boats, the large Silver Medal.

11. To H. W. Hood, Esq. Commander R.N. for his floating-bridge to communicate between a ship and the shore, the large Silver Medal.

12. To Mr. J. Castell, 44, Dartmouth-street, for his improved cock for bottling wine, the large Silver Medal.

13. To Mr. T. Chapman, 4, Royal-row, Lambeth, for his carriage for Mr. Palmer's railway, the Silver Isis Medal and 5*l.*

14. To Mr. Al. Bain, 7, Broad-court, Long-Acre, for his movable stamps for bookbinders, the Silver Isis Medal and 5*l.*

15. To Mr. W. Hilton, 10, Regent-street, Pall Mall, for his ladder-crane, the large Silver Medal.

16. To Mr. Jas. Dowie, } Edinburgh,
17. To Mr. Al. Black, }
for their improved machine for the use of boot and shoemakers, two Silver Isis Medals.

18. To Mr. R. Mottershead, for his expanding piston for high-pressure steam-engines, the large Silver Medal and 20*l.*

19. To Mr. T. E. Bonner, 38, Tabernacle-walk, Finsbury, for his door-lock, the Silver Isis Medal.

20. To Mr. Jos. Clement, 21, Prospect-place, Southwark, for his improved turning-lathe, the Gold Isis Medal.

21. To Mr. And. Smith, 2, Palace-street, Pimlico, for his lever-cramp, the Silver Isis Medal.

22. To J. P. Holmes, Esq. 21, Old Fish-street, Doctors'-commons, for his obstetrical instruments, the large Gold Medal.

23. To Mr. C. Gibson, 71, Bishopsgate-within, for his spoon for administering medicine, the Silver Isis Medal.

IN POLITE ARTS.

(Honorary Class)—Copies.

24. To Mr. Al. Beaumont, County Fire Office, Regent-street, for a copy in pen and ink of figures, the Silver Isis Medal.

25. To Mr. W. Price, 46, Warren-street, Fitzroy-square, for a copy in chalk of a head, the Silver Palette.

26. To Mr. T. Underwood, Colemore-row, Birmingham, for a copy in pencil of a landscape, the Silver Isis Medal.

27. To Mr. R. Finlayson, 45, Upper Baker-street, for a copy in water-colours of an historical subject, the large Silver Medal.

28. To Miss F. Burnell, 14, Park-square, Regent's-park, for a copy in chalk of a head, the Silver Palette.

29. To Miss M. H. Crutwell, 59, Stafford-place, Pimlico, for a copy in chalk of a head, the Silver Isis Medal.

30. To Miss Wiggins, 130, Piccadilly, for a copy in Indian ink of a landscape, the Silver Isis Medal.

31. To Miss L. Welby, 100, Guilford-street, for a copy in pencil of a landscape, the Silver Palette.

32. To Miss L. Corboux, 5, Hercules-buildings, Lambeth, for a copy in chalk of an historical subject, the Silver Isis Medal.

33. To Miss E. Blair, 39, Welbeck-street, for a copy in chalk of an historical subject, the large Silver Medal.

34. To Miss J. W. Leith, 32, Kenton-street, Brunswick-square, for a copy of a portrait in miniature, the Silver Palette.

35. To Miss B. S. Wiggins, 130, Piccadilly, for a copy in water-colours of a landscape, the large Silver Medal.

36. To Miss E. Parker, 19, Great Newport-street, for a copy in water-colours of a landscape, the Silver Isis Medal.

37. To Miss J. W. Hurlstone, 52, Sloane-street, for a copy of flowers in water-colours, the large Silver Medal.

38. To Miss Lester, 10, Elm-street, Gray's-inn-lane, for a copy of flowers in water-colours, the Silver Isis Medal.

39. To Mr. J. W. Moore, 6, Argyll-street, for a copy in pencil of an animal, the Silver Isis Medal.

40. To Miss Murray, 72, Euston-square, for a copy in oil of a landscape, the large Silver Medal.

41. To Miss E. A. Dyer, Didmarton, Gloucestershire, for a copy in miniature of an historical subject, the Silver Isis Medal.

Drawings from Busts.

42. To Miss M. A. Williams, 12, Charlotte-street, Bloomsbury, for a drawing in chalk from a bust, the Silver Palette.

43. To Miss J. Eggbrecht, 16, Frith-street, Soho, for a drawing in chalk from a bust, the Silver Palette.

Original.

44. To Miss E. F. Haworth, Barhamwood, Elstree, Herts, for an original historical miniature, the Gold Isis Medal.

45. To Miss M. Jones, 8, Coleman-street, for an original portrait in miniature, the Gold Isis Medal.

46. To Miss Mintorn, Woodfield Cottage, Bristol, for an original portrait in miniature, the large Silver Medal.

47. To Miss Witts, 8, Brunswick-square, for an etching of an animal, the large Silver Medal.

48. To Mrs. Jos. Stannard, St. Giles's, Norwich, for an original oil painting of dead game, the Gold Isis Medal.

ARTISTS.

Copies.

49. To Miss Chapman, 106, Great Russell-street, for a copy in water-colours of figures, the large Silver Medal.

50. To Mr. J. H. P. Stubbs, 28, Allsop's-buildings, New-road, for a copy of figures in pen and ink, the Silver Palette.

51. To Mr. J. Pasmore, 6, Salisbury-court, Fleet-street, for a copy in pencil of a head, the Silver Palette.

52. To Miss F. Riviere, 8, Cirencester-place, Fitzroy-square, for a copy in chalk of figures, the Silver Isis Medal.

53. To Mr. Jas. Walsh, 11, New Burlington-street, for a copy in water-colours of figures, the Silver Isis Medal.

54. To Miss Eliz. Setchell, 23, King-street, Covent-garden, for a copy in chalk of a head, the Silver Isis Medal.

55. To Miss L. Lyon, 22, Nassau-street, Cavendish-square, for a copy in miniature of a portrait, the large Silver Medal.

56. To Mr. J. Peake, 26, Clarendon-street, Somers-town, for a copy in pen and ink of a landscape, the Silver Palette.

57. To Miss L. Derby, 12, Osnaburg-street, Portland-place, for a copy in pencil of a landscape, the Silver Isis Medal.

58. To Miss E. Crabb, Point Pleasant, Wandsworth, for a copy in water-colours of a landscape, the Silver Palette.

59. To Mr. C. F. Du Pasquier, St. James's Palace, for a copy in pencil of animals, the Silver Isis Medal.

60. To Mr. R. Shaw, 20, Hemming's-row, St. Martin's-lane, for a copy in pencil of animals, the Silver Palette.

Drawings and Paintings from Busts and Statues.

61. To Mr. E. U. Eddis, 1, Barnsbury-street, Islington, for a drawing in chalk from a bust, the large Silver Medal.

62. To Mr. C. G. Hill, Queen-street, Golden-square, for a drawing in chalk from a bust, the Silver Isis Medal.

63. To Mr. J. White, 14, Brownlow-street, Holborn, for a painting from a bust, the large Silver Medal.

64. To Miss C. Derby, 12, Osnaburg-street, Portland-place, for a painting in oil from a bust, the Silver Isis Medal.

65. To Mr. C. W. Cope, 45, Clarendon-square, Somers-town, for a finished drawing from a statue, the large Silver Medal.

66. To Mr. A. H. Taylor, 3, Lower Stamford street, Blackfriars, for a finished drawing from a statue, the Silver Palette.

Original.

67. To Mr. Ed. Hassell, 12, Upper Belgrave-place, Pimlico, for a painting in oil of the altar-piece of St. Margaret's Church, the Silver Palette.

68. To Mr. A. R. Slous, 6, Bayham-street, Camden-town, for an original historical composition in water-colours, the large Silver Medal.

69. To Mr. J. W. Solomon, 8, King-street, Covent-garden, for an original historical composition in oil, the large Silver Medal.

70. To Mr. D. Pasmore, 6, Salisbury-court, Fleet-street, for an original group of portraits in miniature, the Gold Isis Medal.

71. To Miss L. J. Green, 8, South Crescent, Bedford-square, for an original portrait in miniature, the Gold Isis Medal.

72. To Miss Alabaster, 58, Piccadilly, for an original portrait in oil, the Gold Isis Medal.

73. To Mr. Jas. Y. Gant, 54, Greek-street, Soho, for an original portrait in oil, the large Silver Medal.

74. To Mr. W. H. Freeman, 2, Stanhope-street, Clare-market, for an original landscape in oil, the large Silver Medal.

75. To Mr. C. Marshall, 24, Everett-street, Brunswick-square, for an original landscape in oil, the Gold Isis Medal.

76. To Mr. W. R. Patterson, 2, Broadway, Westminster, for an original marine painting in oil, the large Silver Medal.

77. To Mr. A. G. Vickers, 8, Barton-street, Westminster, for an original marine painting in oil, the Gold Isis Medal.

78. To Mr. W. A. Crabb, Point Pleasant, Wandsworth, for an original oil painting of flowers, the large Silver Medal.

79. To Miss L. A. Shaw, Stonehouse, Plymouth, for an original painting in oil of fruit and flowers, the Gold Isis Medal.

80. To Mr. L. Wells, 2, Stanhope-street, Clare-market, for an original oil painting of still-life, the large Silver Medal.

81. To Mr. E. Lee, 26, Newland-street, Kensington, for an original historical composition in Indian ink, the Silver Isis Medal.

Models and Carvings.

82. To Mr. J. Mason, Twickenham, for a model of a bust from life, the large Silver Medal.

83. To Mr. H. Hogan, 12, Park-street, Dorset-square, for a copy in plaster of an architectural ornament, the large Silver Medal.

84. To Mr. H. Bailes, 434, Oxford-street, for an original group of figures carved in wood, the large Silver Medal.

85. To Mr. S. Briant, 34, Monmouth-street, for his model of St. Clement's Church, the Silver Isis Medal and 5*l.*

Architecture.

86. To Mr. R. Stokes, 29, Lower Brook-street, Grosvenor-square, for a drawing in perspective from a Corinthian capital, the large Silver Medal.

87. To Mr. R. Garland, 13, Gray's-inn-terrace, for a drawing in perspective from a Corinthian capital, the Silver Isis Medal.

88. To Mr. T. J. Kilpin, 6, Orchard-place, Kingsland-road, for an original design for a Gothic cathedral, the large Silver Medal.

Gem Engraving.

89. To Mr. C. Durham, 17, Arundel-street, Strand, for an engraving in intaglio of a head, the Gold Isis Medal.

90. To Mr. J. S. Phillipps, 25, Kirby-street, Hatton-garden, for an engraving in cameo of a horse, the large Silver Medal.

Engraving on Wood.

91. To Mr. M. M. Hart, 31, Gerrard-street, Soho, for engravings on wood, the large Silver Medal.

IN MANUFACTURES.

92. To C. T. Tower, Esq. Weald Hall, Essex, for his flock of Cashmeer goats, and for a shawl manufactured from their wool, the large Gold Medal.

93. To Mr. R. Lloyd, 71, Strand, for his sheet cork, the Silver Isis Medal.

IN COLONIES AND TRADE.

94. To the Rev. L. Guilding, King's Town, St. Vincent's, for his communication respecting the insects which infest the sugar-cane, the Gold Ceres Medal.

95. To W. Green, Esq. Quebec, for pigments, the produce of Canada, the Gold Isis Medal.

96. To Greg. Blaxland, Esq. Sydney, New South Wales, for wine, the produce of his vineyard in New South Wales, the Gold Ceres Medal.

By Order, ARTHUR AIKIN, Sec.

TRANSACTIONS

OF

THE SOCIETY

DURING THE SESSION 1827—28.

PAPERS

IN

AGRICULTURE.

No. I.

FOREST TREES.

The LARGE GOLD MEDAL *was this session presented to Lord* NEWBOROUGH, *for his Plantations of Forest Trees in Caernarvonshire and Denbighshire. His Lordship has transmitted to the Society a copy of his planter's book, from which the following particulars are extracted.*

ON the Bodfean estate the new plantations were begun in the year 1815: 10,400 trees were planted on Bodfean mountain in all aspects, and on soil varying from peat to fine loam. At the present time (1828), those which were planted on the lower part of the mountain are in a healthy, thriving state; but those towards the top, especially on the west side, are stunted and make little progress.

On other parts of the estate, 41,576 trees were planted on loamy soil, mixed more or less with peat, and here and there clayey. These are also, for the most part, in a healthy, thriving state.

In 1816, 85,538 trees were planted on Bodfean mountain, which are now healthy and in a growing state, except where the gorse and heath were allowed to overtop them. The number of trees planted on other parts of the estate was 4800, on a loamy soil, with a south and north aspect; and these at the present time are strong and healthy.

In 1817, 91,715 trees were planted on Bodfean mountain, all of which are now doing well, except where the gorse and heath were allowed to overtop them.

On another part of the estate, 10,035 trees were planted on a fine deep loamy soil facing the south-west, which are now in a remarkably healthy, vigorous state. Above half the number are alder: it may, therefore, be presumed that the soil is inclining to wet.

In 1818, 118,122 trees were planted on Bodfean mountain, and are doing well, especially those on the lower part of the mountain.

On another part of the estate, in a rich loam with a westerly aspect, 1630 trees, chiefly larch, fir, and elm, were planted. Many of these have failed, and the rest are not doing well, on account of their exposure to the westerly winds, notwithstanding the rich soil in which they stand. A small number of trees was planted in a similar soil with a southerly aspect, and all these are remarkably flourishing and vigorous.

In 1819, 234,140 trees were planted on Bodfean mountain, and are at present doing very well, with the exception of those on the western side.

6,985 trees were also planted as a screen in a fine loamy soil exposed to the north-east, and these are doing particularly well.

In 1820, 233,268 trees were planted on Bodfean

mountain, which are now in a healthy and thriving state, with the exception of those on the western side.

2900 trees were also planted in rich loam, of which those exposed to the north-east are doing very well, while those exposed to the west have suffered much from the gales in that quarter.

In 1821, 124,764 trees were planted on Bodfean mountain, and 1081 in loamy soil, with a north-east aspect, which are all doing well, except those which were planted near the top of the mountain. Above 7000 were planted in sandy loam, with a south aspect, and are all doing well.

In 1822, 129,780 trees were planted on Bodfean mountain, and above 14,000 others on black loam, bog, and clay, with a north aspect, which are doing well.

In 1823, 207,050 trees were planted on Bodfean mountain, which are all doing well, except those that are near the top. 11,350 trees were planted in a fine rich soil, exposed to the south-west: these are all in a very unhealthy state, arising partly from the exposure, and partly from the imperfect drainage of the land in which they are placed.

In 1824, 71,700 trees were planted — none on the mountain; some facing the south-west, on various kinds of soil, where they are, for the most part, doing ill, especially where the ground was wet; some facing the north and north-west, but sheltered by rising ground, are doing remarkably well.

In 1825, 204,802 trees were planted; none on the mountain. The summer proved very dry, and all the trees that had been put into light gravelly soil or peat suffered greatly: those in wet loam were better, and those

in strong loam, facing the south, are in very good condition.

In 1826 and 1827, above 180,000 trees were planted, of which 60,000 were required to replace the failures of the preceding year.

The total amount of trees planted on the Bodfean estate, in the years 1815 to 1828 inclusive, has been 1,806,889.

On Clynnog mountain, in Caernarvonshire, there were planted, in the years 1825, 1826, and 1827, 667,200 trees, consisting of oak, ash, sycamore, larch, and Scotch fir, in nearly equal proportions; the oak being, upon the whole, however, the most numerous. The plantation is situated on the sides and in a dingle of the mountain; and being sheltered by other hills, on the south and west, from the prevailing sea gales, is in a healthy and growing state.

On the Abbey and Melae estates, from 1824 to 1828, were planted 170,031 trees, which are, for the most part, in a good state, except where exposed to the sea wind.

On the Glenllifon estate, in 1822, were planted 77,609 trees. Of these, some in a wet loamy soil, exposed to the west, have experienced many failures; while those on dry loamy soil, even though exposed to the west, have succeeded very well. A plantation on loamy soil, open to all aspects, has been much injured by the herbage being allowed to grow and overtop the young plants.

In 1823, 70,800 trees were planted on loamy and gravelly soil, and these, except where exposed to the west, are doing well.

In 1824, 83,680 trees were planted. Some were on flat land, near the sea, and imperfectly drained; so that,

partly from exposure to the west wind, and partly from being overgrown during the summer with coarse semi-aquatic grasses and rushes, many of these have failed. Some larches planted on strong clay have also failed.

In 1825, 59,607 trees were planted on a rich loamy soil, open to all aspects: they are doing tolerably well, but are injured more or less by being overgrown by the grass and weeds.

In 1826, 389,300 trees were planted, of which about 180,000 were fir and larch. In consequence of the drought of the summer, about one-third of the whole number planted were destroyed, the loss falling in greater proportion on the fir and larch than on the hard wood trees.

In 1827, 315,000 trees were planted on various soils, open to the north-east and west. These are all at present thriving, and likely to do well.

The whole number of trees planted by his Lordship on the above-mentioned estates, during the last seven years, is 3,738,000; and from the remarks contained in the margin of the planter's book, the following conclusions may be drawn:—

That exposure to the prevailing sea winds on the western coast is highly injurious to young plantations;—that if a very dry summer succeeds the autumn and spring planting, a considerable proportion of the young trees, especially of the pinus genus, will perish, although such dry season will probably be by no means injurious to trees a few years old;—that although plantations will rise tolerably well on land imperfectly drained, other circumstances not being unfavourable, yet it is highly detrimental to them when exposure to the sea wind is

superadded;—that plantations, in other respects favourably situated, are injured by grasses and weeds overtopping the young plants, and that many perish when this circumstance is combined with an imperfectly drained soil.

No. II.

A NEW ESCULENT VEGETABLE.

The SILVER CERES MEDAL *has been presented to* JOSEPH HOULTON, *Esq., Grove Place, Lisson Grove, for introducing the Roots of Stachys palustris as a new Esculent Vegetable. The following Letter has been received from him on the subject.*

11, *Grove Place, Lisson Grove,*
SIR, 28*th January*, 1828.

I OBSERVE in the list of premiums offered by the Society of Arts, that one is for introducing new and useful vegetables.

I have, therefore, the honour to submit to the consideration of the Society a specimen of an esculent which I call Panace. It is the cultivated Panax coloni of the older botanists; the Stachys palustris of Linnæus.

The roots of this plant, taken up in December and January, are from six to ten inches in length, and when boiled, are similar to asparagus in flavour: they are very tender, having no hard fibres, and require boiling but from twelve to fifteen minutes to render them fit for the

table: in the raw state they are very brittle, and free from any unpleasant flavour.

The cultivation of the plant is very simple, and attended with comparatively no expense, and it produces plentifully. Being indigenous, it is easily obtained.

In the month of March the roots should be taken up, and they may be divided into portions, each containing two or three joints. These should be planted not less than twelve inches from the surface, in a light rich soil, and in a moist situation.

From the observations I have made upon the vegetable for two years, I believe the size of the roots might be much increased by careful cultivation.

I have sent specimens of the root, which I have this day taken out of the ground, and put into vinegar.

I shall be happy to lay before the committee fresh specimens, that they may be more able to judge of its merits.

I am, Sir,

Your most obedient Servant,

A. Aikin, Esq.
Secretary, &c. &c.

JOSEPH HOULTON, F.L.S.

The Stachys palustris is distinguished from other species of this genus by its moniliform tuberous roots: these begin to be formed in the middle of summer, and their growth is completed by the time that the herbage dies down in October. At this time the tubers are solid, their joints are roundish, and two buds, one on each side, are seated at the top of each joint. In the month of March the tubers begin to lengthen, they become hollow and stringy, and finally resemble compressed straws, all

their nutritive particles being expended in the roots and new stems.

The natural class of plants (the ringent) to which the genus Stachys belongs, and which is included, for the most part, in the Didynamia gymnospermia of Linnæus, contains many species that abound more or less in fragrant essential oil, and are therefore frequently made use of as condiments in human food: such are all our common pot-herbs—mint, thyme, balm, sage, &c. No species of this great natural order has as yet been found to be poisonous, and none, with the exception of that which is the subject of the present paper, has been found to contain, in any sensible quantity, farina, or other matter nutritive to man. A very good figure of the plant is contained in Curtis's original Flora Londinensis; and Dr. Withering, in his Botanical Arrangement, second edition, after describing the species, observes, that the roots, in times of scarcity, have been made into bread, after (it may be presumed) having been dried and ground to powder. Mr. Houlton's application of it as an esculent root is, on every account, better than making it a substitute for flour; and the number of our winter vegetables for the use of the table being but small, it is not unlikely that this plant will be found a welcome addition. It grows with most luxuriance in light moist loam or silt; and it is probable that the more marshy parts of Battersea Fields, and other similar situations, which now produce little else than the yellow iris and weedy herbage of the coarsest kind, may be profitably cropped with the Stachys palustris.

PAPERS

IN

CHEMISTRY.

No. I.

APPARATUS FOR INSTANTANEOUS LIGHT.

The SILVER ISIS MEDAL *was presented to Mr.* GEORGE JACKSON, 30, *Church Street, Spitalfields, for his Apparatus for Instantaneous Light, which has been placed in the Society's Repository.*

30, *Church Street, Spitalfields,*
April 25, 1827.

SIR,

I BEG leave to inform you that I have contrived what I conceive to be an improvement on the apparatus usually employed for obtaining light by means of hydrogen gas and spongy platinum, and I shall feel particularly obliged by your laying the same before the Society of Arts.

The objects which I had in view in constructing this apparatus were *simplicity* and *cheapness*. In these I have so far succeeded, that the uncovering of the cap of platinum is rendered unnecessary, and a taper is fixed in a situation to be lighted by simply turning the cock; and the instrument can be sold at about half the price of those in common use.

My attention was turned to this subject by frequently

having occasion for a light when called to the practice of my profession by night. I tried in succession the phosphorus bottle and the oxygenated matches, and was fitting up an instrument on Volta's plan, when Dobereiner's discovery of the action of hydrogen on spongy platinum was made public. I then substituted a cup with platinum for the electrophorus, and in that state used the apparatus for a long time before I thought of making any improvement on it.

The instrument which I have the honour of laying before the Society, consists of an inverted syphon, made of stout glass tube, about half an inch outside diameter, having a ball, about two inches and a quarter diameter, blown on each leg. The bend of the syphon is cemented into a wooden foot, loaded with lead, and the ball on the longer leg stands about six inches (measuring from centre to centre) above that on the shorter one. The tube extends about an inch above each ball. That from the upper one is simply covered with a loose brass cap, more for ornament than use. On that which rises from the lower ball a brass cap is cemented, into the top of which a brass plug is ground, with a hole drilled across it, met by another drilled up the centre, so as to form a stopcock. A jet with a fine orifice is screwed into the side of the cap, so as to communicate with the lower ball through holes in the plug when the latter is turned; and just below the jet an arm projects, which carries a short piece of brass tube, lying horizontally, that serves to support the platinum, and protect it from accidental displacement. The end of a thin platinum wire is formed into a small helix of two or three turns, by bending it round a wire or glass rod, and is covered with moist ammonio-muriate of platinum. It is then heated to redness in the flame of a

spirit-lamp, again coated with the ammonio-muriate, and again heated, so as to form a platinum sponge, from the size of a pepper-corn to that of a pea. The wire is then attached to a ring, made of brass tube, of a size to admit of being pushed tightly into that which is supported by the arm; so that the platinum sponge hangs in the centre of the tube directly before the jet. In the arm above mentioned, between the jet and the platinum, and a little to the side, is a hole just large enough to contain a piece of wax taper, the wick of which is thus placed so as not to obstruct the jet of gas, but yet near enough to be lighted when the gas is inflamed. In the part of the tube between the bend of the syphon and the lower ball, a cork, grooved at the sides, is inserted, to prevent the zinc from falling into the bend.

To charge the instrument for use, the brass plug is taken out, and a number of narrow slips of zinc, about two inches long (cut from a piece of the thin malleable metal), are introduced into the lower ball, which is then nearly filled with diluted sulphuric acid, poured through the upper orifice. As soon as a brisk action commences, the plug is replaced, and the gas, accumulating in the lower ball, drives the acid into the upper one, when the production of gas ceases. The lower ball being thus filled with hydrogen, on turning the plug a portion of it escapes through the jet, becomes ignited by its action on the platinum sponge, and lights the taper, a portion of acid at the same time descending from the upper ball, acting on the zinc, and causing a fresh production of gas. It is not very material how much the acid is diluted: that which I have used is made by mixing one measure of oil of vitriol with about ten measures of water, and it answers very well.

In the instrument in the Society's possession, the upper ball is about six inches (from centre to centre) above the lower one. I have since made one wherein the distance is only four inches, and I think it lights with rather less expenditure of gas.

To prepare the ammonio-muriate of platinum, a solution of the metal in nitro-muriatic acid is dropped into a solution of muriate of ammonia in distilled water, and the yellow precipitate is collected on a filter. Should it become dry, it must be moistened with *distilled* water.

I am, Sir,

&c. &c. &c.

A. Aikin, Esq.
Secretary, &c. &c.

George Jackson.

Reference to Mr. Jackson's Platina Light.
Figure 13. *Plate I.*

a. The stopper through which the zinc is introduced into the bulb *b;* it is prevented falling lower than *c* by a notched cork placed within. Diluted sulphuric acid is poured in through the bulb *d* till it fills the bulb *b;* the stopper *a* is then put in, and as the hydrogen gas is generated, the liquid is forced down through the bottom *c* into the tube *e* and the bulb *d,* so that none remains in contact with the zinc. The stopper *a* also forms the cock, it being hollow, as shewn in section, fig. 14; and on turning its lateral aperture opposite the jet *f,* the gas is pressed out by the weight of the fluid in *d* and *e,* and blows against a piece of spongy platina suspended by platina wire in the short tube *g;* the platina becoming

hot, kindles the gas which heated it, and this flame lights the wax taper *h*, which is stuck in a hole in the arm *i*; this hole is so much on one side of the jet as to let the wick only just touch the flame; the arm *i*, which holds the taper, is soldered to the brass neck *j* and to the tube *g*. Fig. 15 is a full-sized section of the tube *g*; within it slips a shorter ring of tube *k*, round the upper part of which the wire is twisted that holds the spongy platina; thus the platina, though hanging loose, is protected from accident, and is always opposite the jet.

No. II.

PURIFICATION OF LINSEED OIL.

The SILVER ISIS MEDAL *and* TEN POUNDS *were presented to Mr.* THOMAS COGAN, *for his Method of Purifying Linseed Oil.*

OF the seed-oils, those which are in the greatest demand are from rapeseed and from linseed. In France and in most other parts of continental Europe, rapeseed oil is that which is generally used for lamps; but it will not give a clear light till it has been freed from the mucilage and other matters which, when heated, become charred, and thus load the wick, and, by obstructing the capillary attraction, impair the free supply of oil. Acids, properly applied, will precipitate the mucilage; but long subsidence or tedious filtration are necessary for this purpose; and, after all, the oil is found still to retain

some acid, or at least its properties have undergone some change, which diminishes its inflammability.

Linseed oil is not made use of in lamps; but there is an immense consumption of it as the basis of oil paints, both of those that are used in house-painting within doors, and of those that are employed by the artist. Linseed contains so much mucilage, that it is necessary to roast the seed more or less, in order to enable it to give out its oil to the action of the press; and on this account, the oil, which naturally has only a pale yellow colour, is generally reddish brown, from the previous toasting of the seeds, and still contains also a considerable proportion of mucilage. By separating from the oil this scorched mucilage, it is much improved as a vehicle for white and pale colours, and is also better able to resist the action of air and the weather.

M. Thénard was, it appears, the first who published a method of freeing the seed-oils from their mucilage, by the action of sulphuric acid; but the subsequent separation of the charred matter, by long standing, or by slow filtration, was a great objection to the process; and the attempt to wash out the remains of the acid, by mechanical agitation of the oil with water, either cold or warm, was far from being fully successful.

Mr. Cogan's process, though resembling M. Thénard's in the first part of it, is completed by the judicious introduction of steam; by means of which the oil appears to be almost entirely freed from acid, and the black feculent dregs subside in the course of twelve hours, leaving the supernatant oil quite clear, and greatly improved in colour, and in those qualities for which it is valued by the painter.

The quantity of oil that he operates upon at once,

is about 100 gallons. For this, three quarts, that is about ten pounds, of sulphuric acid (oil of vitriol), is required. The acid is to be diluted with an equal bulk of water. The oil being put into a copper pan, of the shape of a boiler, two quarts of the dilute acid are to be added: the whole is then stirred up very carefully for an hour or more with a wooden scoop, till the acid has become completely incorporated with the oil, and the colour of this last has become much deeper than at first. A second similar quantity of acid is then to be added and mixed with the oil in the same way as the first was; and after this, the remaining third part of acid is to be added. The stirring of the oil is to continue incessantly for about six hours in the whole, at the end of which time the colour of the mixture will be almost that of tar. It is then to be allowed to stand quiet for a night, and in the morning is to be transferred to the boiler;—this is of copper, and has a steam-pipe entering it at the bottom, and then dividing into three or four branches, each of which terminates in a perforated plate. The steam, thus thrown in, passes in a very divided state into the oil, penetrates into every part of it, and heats it to the temperature of boiling water. The steaming process is to be continued for about six or seven hours, at the end of which time it is to be transferred to a cooler, of the form of an inverted cone, terminating in a short pipe, commanded by a stopcock, and also having a stopcock inserted in its side, a few inches from the bottom. After remaining a night in the cooler, the oil is fit to be withdrawn; for this purpose the cock at bottom is opened, and the black watery acid liquor flows out. As soon as the oil begins to come, the cock is closed, and that in the side of the cooler is opened. From this the oil runs quite clear and limpid;

the whole of that which is still turbid remaining below the upper cock. The purified oil being drawn off, that which is turbid is let out into a reservoir, where it either remains to clarify by subsidence, or is mixed with the next portion of raw oil.

PAPERS

IN

MECHANICS.

No. I.

INSTRUMENT FOR THE USE OF BOOT AND SHOE MAKERS.

Two Silver Vulcan Medals were presented, one to Mr. James Dowie, and the other to Mr. Alex. Black, both of Edinburgh, for their Instrument for the use of Boot and Shoe Makers, one of which has been placed in the Society's Repository.

4, *Register Street, St. Andrew Square,*
Edinburgh, 8th January, 1828.

Sir,

We have the honour to enclose for the consideration of the Society of Arts, a notice regarding an apparatus for the use of boot and shoe makers; and also *four* certificates from masters in the trade, who have had those in use which were formerly invented, and *three* of whom now use the kind which is herewith sent; *eight* from other masters, who have had opportunities of judging of its usefulness, *two* of them having used them; and *twelve*

from workmen, who have had like opportunity, some of them having wrought and are still working with them.

We are, Sir,
&c. &c. &c.

JAMES DOWIE,
Boot Maker.

ALEX. BLACK,
Surveyor.

A. AIKIN, Esq.
Secretary, &c. &c.

The posture in which boot and shoe makers usually work has long been known to be injurious to their health, and has led to the invention of various plans for executing their work in a more favourable position; none of these, however, have been generally adopted, owing to their not fully answering the intended purpose, and also from circumstances connected with the trade itself.

I shall as briefly as possible state a few facts illustrative of what I mention: first, it is known to medical men that the workmen are in general liable to indigestion, gravel, piles, and other analogous diseases, arising in a great degree from the constrained postures in which they work.

The mode the workman adopts when sitting is as follows:—The boot-closer executes his branch by the assistance of an implement styled a pair of clams, which is merely two pieces of staves, about two feet six inches long by three or four inches broad, fixed on a block at the under end, in the form of a triangle, and sometimes in the form of an ellipse. The work is put in at the top, and is held in the clams by the pressure of the knees of

the workman. Another part of this branch is done on a block of wood on the left knee, steadied there by means of a strap passing under the sole of the foot, and over the block on which the work is placed.

The workmen, when making either shoes or feet of boots, generally use the same sort of strap, but sometimes hold the shoe between the left knee and the chest, causing these two parts to answer the purpose of a vice; and also often hold the work between the knees, the thighs serving for a support while hammering it and finishing. The hard leather is prepared by being hammered on a stone or smooth iron laid on the thighs of the workman.

A want has always been felt of some apparatus by which the boot or shoe might be kept firm in any required position, without constraining the workman to adopt postures so inimical to his health as he is obliged to assume in the ordinary mode of working.

Among the first inventions for this purpose (that I know of) was one by Mr. Holden, of Fettleworth. His method was to keep the boot or shoe on a cushion, in order to allow the workman to sew it; but, from the description, it does not appear capable of admitting the workman to perform other operations, such as hammering and finishing, at least with ease to himself or safety to the machine; and it is incomplete for want of a proper closing apparatus.

The next is that of a Mr. Parker, and is described by Mr. Smith, in his Compendium of Practical Inventions, as "consisting of a bench standing on four legs, the top of it being about four feet from the ground; a circular (or rather annular) cushion, in diameter at least equal to the length of the shoe, is placed on the

bench. Through the centre of the cushion, and through the bench, is a hole to admit a strap, which being brought double through the hole, forms on the top of the cushion a loop to admit the shoe containing the last: when, therefore, the lower ends of the strap are fastened to a board on the floor, like the treadle of a foot-lathe, the workman pressing upon this board, holds the shoe sufficiently tight upon the cushion to proceed with his work; and by taking off the pressure of his foot, the shoe can be turned or taken off. The cost is estimated at two guineas." This one, however, requires the workman always to stand, in order to press down the treadle with his foot, and is, therefore, unnecessarily fatiguing. In this, as well as the other, there is no contrivance for closing.

There is another by a Mr. Johnston, somewhat similar to the last one described: they differ in this, however, that the cushion of the latter is an oblong block of wood, rising on each side, like the two thighs of the workman; a strap passes through it as in the other, but instead of being fixed to a foot-board, it is attached to a spring, which allows the workman to stand free, or sit on a high seat. The disadvantage attending it is, the strength of spring to keep the shoe firm is such that the workman cannot adjust his work quickly. There seems to have been a kind of clams attached to it, which partake of the same inconvenience.

A Mr. Stass invented a form of clams with a joint like that of pliers, and a strap attached to each end of the lower part, and fixed to a treadle. All which, from the workman being obliged to stand in order to press down this treadle, rendered it as difficult as when sitting in his former condition; the only advantage being that of having his body in a more upright posture.

The plan now offered to the consideration of the Society of Arts is intended to obviate these difficulties.

I have been assisted in bringing the apparatus to its present convenient form by Mr. Alexander Black, surveyor; we have, in conjunction, endeavoured to arrange it so as to adapt it to all the purposes of the workmen; and to avoid the defects of the usual methods, and of those which appeared to us to exist in the other plans mentioned above.

I have had several of the machines in use by my men since the end of the year 1824, and feel warranted by experience in saying, that they answer perfectly, both in affording facility and despatch, and in improving the situation of the workmen in regard to health; while no trouble has been found in its adoption by men who had been accustomed to work in the old way.

The model which accompanies this may be considered as of a proper average size, it being of the same dimensions as those at present in use here; it may vary in its height according to that of the workman.

The frame consists of four legs, a bottom, and top, with rails for the reception of the arbor of the wheel and axle. There are also a pair of clams, a block for flat seam, and a circular block stuffed and covered with leather; all of which are occasionally placed on the top of the frame as they may be required.

There is a weight of about seventeen pounds attached by a strap of leather to the wheel. The paddle for easing the work is attached to the axle by a strap, and slides on brass friction plates placed on one of the legs. The circular block and small cushion serve as a bed for the shoe to lie on during every part of the operation, except in closing, and are kept firm by a strap from the axle

passing up from it through a hole in the top of the frame.

The form of the clams is, I believe, new, and is very convenient, as the work to be held in them is adjusted by the operation of the paddle, and is connected to the power on the axle by means of a fixed strap and hook to a swivel on the former strap. The block for flat seam is held by the same means as the shoe.

It may be noticed, that the closing apparatus is well adapted to the use of saddlers and harness-makers.

One cause of the plans formerly proposed not being adopted arose, as I have stated, from circumstances connected with the trade itself, and will apply to this invention as well as to them. This cause, I humbly think, may be obviated, with immediate advantage both to masters and workmen. The men at present work chiefly in their own houses, which are thus rendered inconvenient to their families, as they seldom or never have a separate room to work in; and the masters have not the advantage of the immediate superintendence of their workmen, they being all scattered in different parts of the town.

Now this could be obviated, in my opinion, with little expense, and a great deal of comfort secured to the workmen, as well as convenience to the masters, if the latter were to provide workshops for their men, furnished with these benches, according to the number of hands they employ. In such an arrangement, the master would have it in his power to inspect his work at once, and see his materials properly manufactured, according to his own directions, without the necessity of having to go through all his different workmen's houses. There would also be a stimulus to the workmen to improve in their work, as

well as many other advantages. One of these, in my opinion, would be to lead the men to great habits of sobriety and industry; and I am borne out in my opinion by conversations which I have frequently had both with masters and workmen.

When it is considered that the trade of shoe-making is practised in almost every country, and that the workmen form a considerable portion of every community, it is hoped that any plan conducing to the improvement of the habits and health of such a numerous class will not be deemed unworthy of the attention of a Society which does so much for the promotion of the useful arts and for the welfare of the working classes.

Reference to the Drawing of Mr. Dowie's Shoe-making Machine, one-eighth of the real size. Plate VII.

Figs. 1 and 2. Front and side views. It consists of four bars *a a a a*, framed together at top by bars *b*, and into a block *c* at bottom; three sides are closed with thin boards *d d d*, and the fourth by the door *e e*, which hides the inside, and makes it appear like a square post; in fig. 2 the side board is removed; *f f*, two holes through which studs *g*, fig. 1, fixed in the board, pass; fig. 3, a pin which is passed through their eyes to keep the board in its place, it being stepped into the bottom block; *h h*, fig. 1, the two hinges of the door *e*, it being removed; *i*, a block fixed on the top, having a round hole through the middle, and a circular recess, *j j*, shewn by dotted lines; on this lies the cushion-block *k*, also perforated, and having a circular projection, which goes into the recess *j*, and keeps it central: this cushion is the substitute for the lap; on it the work is held by

the strap *l l*, which is connected to a strap *m* by two swivel links *n n;* these allow the work to be turned about any way without twisting the strap *n*, which is fixed to a small barrel *o; p p*, a larger strap wheel on the same axis; *q*, the strap which is fixed at *r*, and supports the weight *s*. The wheel *p* is three times as large as *o*, and, therefore, the weight *s* holds the work three times as tight as its own weight; *t*, another small barrel also on the same axis, having a strap *u u* fixed to it, this is buckled to a sliding pedal *v v; w w*, the slit in which it moves: *x*, a flat part of the pedal which rubs against the brass plates *y y; z*, a similar piece rubbing against inside plates; a gap is also made in the board *d* for the pedal to move in. By treading on this pedal, the weight *s* is raised and the work released; and on removing the foot the work is held tight.

Fig. 4, the closing vice. Fig. 5, a top view of it opened: *a a*, the two hinges; *b b*, the jaws; in the centre hole there is a screw *c*, from which hangs a strap *d*, having a hook at bottom. Fig. 6, a side view of the strap; when this is used, the cushion-block *k* is removed, and the strap *l* allowed to hang down from the swivel *n;* the closer is then put on it, having a projection *j* to enter the recess, and the strap *d* is hooked to the swivel; the weight *s* then keeps its jaws tight, yet they may be pulled open by the hands, or released by the pedal *v*. The dotted lines, fig. 4, shew the action of opening; when the two corners *e e* rest on the block *i*, the weight *s*, acting on the strap *d*, pulls the middle part down to close the jaws. Figs. 7, 8, side and end view of a block to be held down by the strap *l* on the top *i*. Figs. 9 and 10, side and end views of a soft pad or cushion. Fig. 11, a top view of the cushion-block *k*.

CERTIFICATES.

Edinburgh, 14, *South College Street*,
11*th December*, 1827.

We hereby certify that the machine for the use of boot and shoe-makers, by the model of Mr. Parker, was in use by us, but found it did not answer so well as the model by Messrs. Dowie and Black, and which is in use by us at present; and we think it would be a very valuable acquisition to the trade if it was become a general system.

ANDREW DEWAR,
ALEX. C. DEWAR,
JOHN DEWAR.

Edinburgh, 5*th January*, 1828.

I have minutely examined the machine recently invented by Mr. James Dowie and Mr. Alexander Black, of this city. The object of this invention is, to combine an improved attitude or position of the shoe-maker's body when employed at work, with every requisite perfection in the quality of the workmanship produced; and my decided opinion is, that, by means of the present machine, this desirable end is very successfully accomplished. In the improved state to which the invention is now brought, it is applicable to all the different branches of boot and shoe-making, in all the varieties and particular parts of the same, while the position of the body is manifestly improved: my opinion is, that, in all the departments of the trade, the use of this machine equals, and in most of them excels, the usual mode of operatiou practised by the craft.

JAMES DOW, *Boot and Shoe Maker.*

Edinburgh, 4, *William Street*,
GENTLEMEN, *7th January*, 1828.

I do hereby certify that I have wrought at my trade of boot and shoe-making, for the space of twelve months, on the machine invented by Messrs. Dowie and Black, and find it in every way extraordinarily convenient for the completion of every branch of the trade; and I think that it would be advantageous to the health of the craftsmen if it were in general use.

JOHN TOLMIE.

GENTLEMEN, *December 27th*, 1827.

I do hereby certify that the machine invented by Messrs. Alexander Black, surveyor, and James Dowie, boot-maker, Edinburgh, is completely calculated to perform all the different parts of boot and shoe-making, having wrought at one of them for upwards of two years.

JOHN ANDERSON.

SIR, *Edinburgh, 5th January*, 1828.

I have examined your machine for improving the mode in which shoe-makers sit at their work. The present method of working is extremely uncomfortable, from the stooping posture in which they are obliged to sit, and, at the same time, very injurious to health, from the pressure of their work upon the breast. In your machine all these disadvantages are remedied, as the workman may either sit or stand upright, and perform all the parts of boot or shoe-making with the greatest facility and comfort.

Some years ago I attempted to work with a machine

intended for the same purpose as yours; but from some defects in its construction, it did not answer to my wish, and therefore I laid it aside. But I find all its deficiencies remedied in your machine; and have no doubt that when it comes into general use, it will be found of the greatest utility to the trade.

I am, Sir, &c. &c.

James Dowie, Boot Maker,
4, West Register Street.

J. Wallace.

No. II.

FLOATING BRIDGE.

The Large Silver Medal was presented to H. W. Hood, Esq., Commander of His Majesty's Ship Hyperion, for a Floating Bridge; a Model of which has been placed in the Society's Repository.

His Majesty's Ship Hyperion, Newhaven,
March 3, 1828.

Sir,

The Floating Bridge, which the accompanying plan and elevation represents, was constructed under the following circumstances; and has been in use, as the means of communication between His Majesty's ship Hyperion and the eastern boundary of Newhaven harbour, for two years.

The bed of the harbour in which the ship lies is about twenty feet below the base of the wall or river

embankment; but when she took up her present situation (about three years since), the mud between her and the wall was so soft that it was quite impassable; consequently there was no means of landing but at high water by boats, when the mud was overflowed. This being very inconvenient for keeping up a communication with the eastern line of the service, on which the ship is employed, it occurred to me, that, with the materials to be found on board all ships of war, a bridge might be constructed that would obviate all local difficulties. Accordingly, two lengths of the bower chain cable were placed parallel to each other over the mud, and at right angles with the ship's length, as seen at *a a a*, Plate V., under the casks, and her fish davits, *b b*, were sunk in the mud as posts, to set the cables up to; at the extreme ends from the piles near the ship, the casks were placed on them with grummet slings (snaked); two parallel lengths of the stream chain-cable, *c c c*, were carried over the casks, and the ship's gratings were then placed on the upper part, from cask to cask. Finding that the buoyancy of the casks was still more than sufficient for the weight of the chains and gratings, besides any reasonable weight that might be required to be transported over them, the whole was made as secure as possible by lashings; and the ship's spare capstan-bars, *d d d*, were nailed on to filling pieces, fastened to the headings of each alternate cask, some spare rope being rove through the swifter holes, to act instead of a rail on each side. The utility of the bridge, for this particular situation of one of his majesty's ships, stands thus, and might hereafter prove useful to other vessels under a variety of circumstances:—At low water, when the tide has forsaken the mud bank of the river, a dry and sure footing for the people required to

pass over it is insured, as the casks then lie on the mud, and form the supporters of the gratings; and when the tide is in, the buoyancy of the casks supports the bridge afloat; thus setting the boats at liberty for any other service that may be required.

In Newhaven harbour there is a rise and fall of twenty-two feet water (at full and change); and after the bridge was constructed, the most convenient method of descending to it when the ship was afloat became an object of consideration; accordingly, a stage, *e e*, was run out from the starboard gangway, to which was suspended a long ladder, *f*, and as the ship is moored head and stern, the ladder necessarily rises and falls with her as the tide is flowing or receding. There are weights, *g*, near the ship's side, suspended by ropes, *h h*, which lead from the upper chains of the bridge through sheeve holes cut in the stanchions of the platform *e*, and thus is produced a constant and tight man-rope. Another ladder, *k*, for landing, is placed at the other end against the embankment, *l l*. *m m* is the mud bank; *n n* part of the ship's deck.

That the situation of his majesty's ship Hyperion may be clearly understood, it is necessary farther to state, that where the bridge is situated there is a bed of mud, common to most harbours, alongside of which were driven, by the commissioners of the harbour, piles, *i i*, to keep her off the same in strong westerly winds, the breast mooring chains (not shewn in the drawing) keeping her from going too far from the piles in easterly winds, and the fore and aft cables and spring from going ahead or astern too much.

In this mud we have cut ponds or combers, *j j*, for mooring our boats out of the way of the vessels navi-

gating the river; and as the tide, on ebbing, leaves the ponds always full of water, they remain uninjured from the effects of the sun. The inner embankment, or wall, secures the adjoining meadows from being overflowed at high tides. With respect to the bilge-ways that are attached to the ship's bottom, I should wish it to be clearly understood, that they were fitted at Sheerness dock-yard by directions of the navy board, for the purpose of keeping the ship upright when aground, on her being appropriated to this service; the bridge and ladder, constructed from materials always to be found on shipboard, being the only things I set forward as my own plan and invention.

I am, Sir, &c. &c.

W. H. Hood,
Commander, Royal Navy.

A. Aikin, Esq.
Secretary, &c. &c.

It is probable that the floating bridge above described would be found very useful on all occasions where ships of war are so stationed as to have their communication with the shore, or with other vessels, obstructed at low water by banks of impassable mud. It was stated at the committee by a naval officer, that during the late war, the receiving ship at the Pill, below Bristol, was inaccessible for some hours every tide in consequence of the mud banks. At that time the officer in question commanded a small ship of war employed in conveying men from the receiving ship; and much time was lost, and inconvenience incurred, from the want of communication. This might have been avoided by the use of a floating bridge similar to that invented by Commander Hood.

No. III.

SAFETY RODS FOR BOATS.

The LARGE SILVER MEDAL *was presented to C. H.* ACKERLY, *Esq., Lieut. R.N., for his Safety Rods for Ship's Boats, a Model of which has been placed in the Society's Repository.*

Plymouth, H.M.S. Ocean,
1st November, 1827.

SIR,

I HAVE the honour to forward by my friend, Lord William Paget, M.P., the following enclosures, being my observations on the Self-acting Safety Rod, as applicable to boats in general; certificates of actual experiments, from the Right Hon. the Earl of Northesk, together with those of the captains commanding his majesty's guard-ships at Plymouth, and others from officers of experience; copies of letters, that the same invention has been received at the Admiralty, with a "model;" as also, from the idea of its universal utility, a letter, in confirmation of the same, from the minister of the French marine, together with a letter of opinion from Monsieur le Baron Dupin, F.R.S., &c. &c., Membre de l'Institut à Paris.

A model illustrating the same, for the Society of Arts, I forwarded yesterday by a friend to London, which I have to request you will do me the honour to lay before your Committee, as also to favour me with a few lines in acknowledgment of the same.

I am, Sir, &c. &c.

CH. HENRY ACKERLY,
Lieutenant.

A. AIKIN, Esq.
Secretary, &c. &c.

Observations on the Self-acting Safety Rod, intended for the preservation of Seamen and others upset in Boats.

The invention is simply the application of an iron or copper rod, two feet in length, and three quarters of a pound in weight, having a transverse piece of seven inches for the feet to rest upon, to be fitted at the extremities of whale-boats and galleys, and to the standing thwarts of others, traversing with perfect freedom, at an angle of 25 to 30 degrees, through two small plates, one screwed on the gunwale, the other to the head-sheets or stern-frame, having a place for a forelock, to admit of its being taken out and cleansed. The metallic rod being square, passes through these plates, and is forelocked underneath.

From the position which the safety-rod occupies, lying on the gunwale, sheltered by the wash-streak, it can in no way interfere with the manœuvring or working of a boat, its oars, sails, sheets, masts, or stowage; but it will rather tend to give stability than otherwise. In launches, it takes the course of their build, and is cased in. On a boat's turning bottom up, the life-preserver slides out, and affords to persons so perilously situated a firm support to the feet, and thereby the means of husbanding their strength till assistance arrives.

The advantage to life-boats of the self-acting safety-rods, when fitted to their standing thwarts, is that of facilitating their being righted on capsizing.

The experiment tried alongside the royal yacht, on the 17th July, 1827, in the presence of his Royal Highness the Duke of Clarence, Lord High Admiral, of Admiral the Earl of Northesk, of Captains Sir W. Hoste, Bart., Sir Edward Owen, K.C.B., Edward Hawker, Esq. (flag-captain,) and of John Barrow, Esq. proves the applicability of this invention to boats.

A waterman's boat, such as ply to his majesty's ships in the sound, 14 feet long and 5 feet 8 inches in the beam, was chosen to exemplify the invention. Three safety-rods were fitted to this boat, one on each side the bow, the other traversing through two square staples driven into the stern-post. On her being upset, these rods supported four men breast-high out of the water, preserving a perfect equilibrium, and doubtless would, even in a rolling sea.

The bilge, or rubbing-batten, in life-boats and galleys, by being continued fore-and-aft, morticed sufficiently to admit the fingers, enables men to hold on with greater facility, and in no way impedes their velocity.

The cheapness of the apparatus is also much in its favour, and will bring it within the reach of the poorest fisherman. The open boats used by these men are occasionally upset in heavy weather, and a serious loss of human life is generally the consequence. It is very probable that in these and similar cases the safety-rods would be found very efficacious.

The model of a gig or galley, which accompanies this communication, is a kind of boat, as much in use in his majesty's naval service as in the commercial, and has been selected as having cost the lives of more seamen than any other. From her great length and narrowness, the safety-rods are placed at the extremities. The black perpendicular lines on each side the keel indicate to persons in the water where to place their feet; and when supported, instinct points out the utility of the morticed bilge-batten, in giving a firm grasp for the hands.

CH. HENRY ACKERLY,
Lieut. H.M.S. Ocean.

CERTIFICATES AND DOCUMENTS.

MONSIEUR, *Paris, le* 14*e Septembre*, 1827.

J'ai reçu avec la lettre que vous m'avez fait l'honneur de m'écrire de Plymouth, sous la date du 22e Août dernier, le dessein et la description d'une installation inventée par vous, et qui a pour objet de donner aux marins composant l'équipage d'une embarcation qui viendrait à chavirer, les moyens de se soutenir sur l'eau, en attendant qu'on pût venir à leur secour.

J'ai lu cette description avec bien de l'intérêt, et je vous prie de recevoir tous mes remercimens pour la prompte communication que vous avez bien voulu m'en faire, et qui vous a été inspirée par un sentiment généreux d'humanité.

Je vais donner des ordres pour que l'essai de votre invention ait lieu dans un des ports du roi, et je ne doute point qu'elle n'obtienne en France le même succès qu'en Angleterre.

CHABROL.

A M. CH. HENRY ACKERLY.

MONSIEUR, *Paris, le* 4*e Octobre*, 1827.

Je vous dois des remercimens pour l'honneur que vous m'avez fait, en me communiquant votre intéressante invention, relative à la conservation des hommes dans les bateaux chavirés.

On ne peut qu'applaudir à votre intention ; et je pense qu'en beaucoup de circonstances les barres de fer que vous installez dans vos bateaux pourront effectivement contribuer au salut des hommes.

En vous remerciant pour les expressions beaucoup trop obligeantes de votre lettre, j'ai l'honneur d'être, avec une haute consideration,

Monsieur,

Votre très-humble et très-obéissant Serviteur,

BENJ. CH. DUPIN.

I hereby testify my opinion as to the experiment of Lieut. Ackerly's invention having been tried before me on the 17th July, 1827; and from the degree of security given to four men when supported by the life-preserving irons, on the boat being turned keel-up, that I conceive his contrivance is well calculated to enable men to lie by a boat so situated, and therefore would tend, in many cases, towards the preservation of life.

NORTHESK,
Admiral.

Lieut. ACKERLY,
H.M.S. Ocean.

H.M.S. Britannia, Hamoaze.

This is to certify, that I witnessed, on the 17th July, 1827, a trial of Lieut. Ackerly's invention for preserving men's lives, by a boat being upset, turned keel-up, when the self-acting safety-rods appeared to answer very well; four men standing easily upon them, and holding by the bottom of the boat.

ED. HAWKER
Captain.

Lieut. ACKERLY,
H.M.S. Ocean.

I am decidedly of opinion, that Lieut. Ackerly's safety-rods will be of the greatest service to such as have the misfortune to be upset in boats in a heavy sea, as it will enable them to hold on with a great facility, and therefore have a greater chance of being preserved.

Having had the misfortune to be upset in a very heavy sea, I observed the men who got on the boat's bottom constantly washed off, which would not have been the case had she been provided with safety-rods; and as they are fitted at a very trifling expense, and not the least in the way, I strongly recommend their being fitted to all boats likely to be exposed to a heavy sea.

PATRICK CAMPBELL,
Captain H.M.S. Ocean.

Lieut. Ackerly's contrivance, termed safety-rods, may, in my opinion, conduce, in many situations, to saving the lives of men in boats which may be upset, and to which they may have been fitted. The expense of fitting them is trifling, and they can be of no inconvenience when fitted.

I regret not having witnessed the trial of their utility.

E. D. KING,
Captain H.M.S. Windsor Castle.

Gravesend, Torpoint,
Oct. 19th, 1827.

From the circumstance of my having lost a lieutenant and two seamen, when in command of his Majesty's ship Iphigenia, at Columbo, in Ceylon, by one of the cutters upsetting, in crossing the Bar in 1817, I feel authorised in granting Lieut. Ackerly this certificate,

in my full concurrence as to the utility of his simple contrivance for the better preservation of persons upset in boats; and in full belief that, had the Iphigenia's cutter been furnished with these live-preserving irons, the service would not have had to deplore the loss of Lieut. Saunders (senior) and two seamen, or his Majesty's 73d regiment three officers drowned at the same time.

JOHN TANCOCK,
Capt. R.N.

From nineteen years' experience as a lieutenant in his Majesty's Navy, I have no hesitation in pronouncing Lieut. Ackerly's safety-rods a very ingenious and highly useful invention; and from having witnessed several accidents occur from boats upsetting, I am of opinion, that had they been fitted agreeably to his plan, many lives would most probably have been saved.

RICHARD INCLEDON,
Senior Lieut. H.M.S. Ocean.

Reference to the Engraving of Lieut. C. H. ACKERLY'S Safety Rods for Boats, in case of their upsetting. Plate IV.

Fig. 5, a stern view of a boat, and fig. 6, a side view of the bow of a similar boat; *a a*, fig. 5, two T-headed square metal rods sliding freely in the staples *b b b b* on the stern of the boat; *c c*, fore-locks, by which they may be taken out for cleaning; at *d d* two more are placed

within the boat near the stern, and six more T-headed rods *e e e e e e*, fig. 6, are placed at the fore end; the three nearest are raised merely to shew them; these slide through metal plates and through the thwarts. Fig. 7 shews one of the rods and its two plates, *f* and *g*, separate: the plates *f* are screwed on to the gunwale *h*, and the plates *g* to the thwarts, as shewn in fig. 8, the square holes being bevelled to suit the rake of the boat, and let the rods traverse freely. Fig. 9 represents a boat upset, when all the safety-rods drop down, as shewn at *a a* and *d d*, (this view not shewing the others) sufficient for the men to stand on and hold by the additional bilge-ribs *i i*, or by the keel, the T-heads now being lowermost, and sufficiently wide to receive their feet: *k k k k*, black lines painted on the keel exactly over the safety-rods, and *l l*, dots on the stern corresponding with the rods, to guide the seamen to the parts of the boat where the rods are placed, that they may be sure to find them with their feet, when, their weight being borne on the rods, they may cling with their hands to the boat, the bilge-ribs *i i* being added for them to take hold of. In launches, the rods should be curved to suit their build, and be cased in.

No. IV.

LIGHT FOR STEAM BOATS.

The SILVER MEDAL *was presented to J.* HIGGINS, *Esq.* 370, *Oxford Street, for his Revolving Light for Steam-Vessels; a Model of which has been placed in the Society's Repository.*

370, *Oxford Street,*
27th Nov. 1827.

DEAR SIR,

As the Society has attached some importance to a revolving light for steam-vessels, and as those already invented have not been adopted by the public, I send you herewith a model of an easy and effectual arrangement of lights which, I think, will be found to be well calculated to answer the intended purpose. If the Society think the subject worthy of being referred to a committee, I will attend to give any explanation which may be thought necessary.

I am, Sir, &c. &c.

A. AIKIN, *Esq.*
Secretary, &c. &c.

JOHN HIGGINS.

The necessity of having a distinguishing light for steam-vessels is evident from the accidents that have occurred for want of such distinction; and the advantage of effecting this by rotatory or revolving lights, may be inferred from the medal which was last session voted to

Mr. Hawks for such an invention. The plan of that gentleman consisted in placing a light at each end of an arm, supported by the chimney, and receiving its motion from the axle of the paddle-wheels. Mr. Higgins's improvement consists in having two opposite fixed lights, one on each side of the chimney, and in placing a pulley at the same height in front of the chimney. From a point in the circumference of the pulley proceeds an arm, bearing the third light, and to this is given a rotatory motion round the axis of the pulley, by connecting this latter, by means of a band, with the axle of the paddle-wheels. The distinctive mark, therefore, of a steamer fitted up on this plan would be, one light revolving between two fixed ones. For further distinction, the moving light may be of a colour different from that of the two others. A farther advantage in this mode of arrangement would be, that as the lights are placed in front of the chimney, they would not be visible to a vessel except a-head or on the bow of the steamer; and, therefore, more or less in her course.

Reference to the Engraving of Mr. J. HIGGINS's Revolving Light for Steam-Boats. Plate IV.

Figs. 1 and 2, front and side elevations; and fig. 3, a bird's-eye view. *a a*, the upper and lower ends of the chimney, the middle part being broken away to bring them nearer together; *b*, the deck; *c c c c*, a band or rope to communicate motion from the machinery below deck to the wheel *d*: this wheel carries an arm *e*, on which the two sheaves *f f* move freely; to them are slung the lantern *g*, by two ropes *h h* and *i i*: they both

pass together through the eyes *j j*, then through the loop *k*, and under the pulley *l* of the weight *m*; they are then made fast to the cleat *n*. These ropes serve to raise and lower the lantern, and also, by the weight *m*, which hangs on them, to secure the upright position and prevent it from swinging while being carried round on the arm *e*: this arm revolves in the dotted circle *o o*. The weight *m* rises and falls half as much as the lantern. *p p*, an iron hoop round the chimney, from which projects an axis for the wheel *d* to turn on; and also the two arms *q q*, to which are slung the two stationary lanterns *r r*. Fig. 4 shews the back of one of these lanterns; they are furnished with four eyes *s s s s*. Two ropes *t t* are made fast to the bottom eyes; they pass through the upper eyes over the pulleys *u u*, placed in the arms, then return through the upper eyes and the lower eyes down to the cleats *v v*. These serve to raise or lower the lanterns, and also to prevent their being blown or shaken out of the vertical position. These two side lights are red, and the revolving one green; and this green one, as shewn in the plan, fig. 3, is so much in advance before the others, as only to appear to revolve between them when you are right a-head and in their way; but if the course of the vessel deviates to the right or left of you, the green light approaches the off red one and separates more from the near one, by which you may judge of its course; and if it deviates still more, it keeps eclipsing the off light; and when going right across your view, the chimney hides the off light, and the green revolving one appears only to rise and fall; and in all cases, the moving light is fore and the stationary one aft, as the reflectors placed at the back of the lanterns prevent their being seen in a stern view, when the vessel is of course going from you.

No. V.

LADDER CRANE.

The SILVER MEDAL *was presented to Mr. W. H.* HILTON, 10, *Regent Street, for his Ladder Crane; a Model of which has been placed in the Society's Repository.*

10, *Regent Street, Pall Mall,*
SIR, 10*th January*, 1828.

I BEG, through your medium, to introduce to the Society of Arts a model of a Ladder Crane, the peculiar advantage of which is, that it can be used where it is impossible to erect those used in common: it is also cheap and safe. Four years ago I attached one to an old step-ladder, and have found it to answer every purpose for which it was intended.

I am, Sir, &c. &c.

A. AIKIN, *Esq.* W. H. HILTON.
Secretary, &c. &c.

Mr. Hilton has a warehouse, to the cellar of which there is no access except by means of a step ladder; and the difficulties which were experienced in storing casks of wine in it, induced him to invent the ladder crane described below. It has been in constant use ever since, is cheap, not liable to be put out of order, and, by means of it, one man can lower a hogshead of wine into the cellar, and two men can raise it out again.

Reference to the Engraving of Mr. HILTON'S *Ladder Crane for raising or lowering Goods from one Floor to another, or from a Cellar to the Street. Plate VI.*

Fig. 4 represents the crane as fitted to a cellar; *g g*, part of the cellar floor; *h*, the upper part opening to the street; *i i*, the ladder, having projecting ridges or ways, *j j*, on each side for the platform *k k*, on which the goods *l* are placed to traverse, by means of two rollers *m m* under it, which bear against the front *j j* of the ladder, and two rollers *n n* which bear against the back or under-side of the ridges *j j*, and hold it like a hook, as they turn on studs fixed to the side bars of the board *k*. These rollers are so adjusted to the slope of the ladder as to keep the board *k* level, while the weight keeps the rollers always in contact with the ways *j j*. Fig. 5 is a horizontal section of the ladder, shewing how the ridges *j j* are placed between the rollers. The board *k* hangs on two ropes *p p*, which are made fast to its under side, and pass over two wide pulleys *o o* at top of the ladder, (shewn in section, fig. 6, and in a front view in the additional portion of ladder, fig. 7,) and then descend to the barrel *q* placed across the ladder back; the barrel is moved by its wheel *r* and the pinion *s* on the off side of the ladder, the axis of which crosses the ladder, and is turned by the winch-handle *t* on the near side. The barrel has a ratchet-wheel and click *v*. A break may be applied to the wheel *r*, or to one on the pinion axis. If goods are brought on a truck, the platform may be lowered to the dotted lines *k*, but if received from the floor, the ladder may be sunk in a hollow *u u*, large enough to receive the platform *k* level with it. When it is desired to raise goods to a cart, or receive any therefrom,

the additional portion, fig. 7, may be placed on the top of the ladder; its bars *w w* fit in the iron straps *x x*, as shewn by dotted lines, fig. 4; but previously a sufficient portion of rope to reach over this addition is to be let off from the barrel *q*, it being taken from the lower pulleys *o o* to pass over the upper ones for this purpose. The pulley-frames are left open at top; but where this addition is not used, they may be covered by the step *y* joining the sides of the ladder.

No. VI.

STAMPS FOR BOOKBINDERS.

The SILVER ISIS MEDAL *and* FIVE POUNDS *were given to Mr.* ALEXANDER BAIN, *7, Broad Court, Long Acre, for his Movable Stamps for Bookbinders, a Set of which has been placed in the Society's Repository.*

THE covers of books expensively bound have embossed, or rather indented, ornamental patterns in the middle and corners. These patterns are cut in brass, and being applied to the surface of the cover, are in that situation subjected to the action of a strong press. The corner pattern is triangular, and the middle one is formed by the combination of four impressions similar to the corner one. A single pattern-block is used for this purpose; and therefore, in a book ornamented as above stated, requires to be applied eight different times for each side,

or sixteen times in the whole. This occasions the loss of much time; and in order to save the greater part of it, Mr. Bain employs four triangular blocks, capable of being fixed in a simple adjustable frame, so as to suit any sized book. One adjustment with two actions of the press gives the four corners on both sides, and another adjustment with two actions of the press gives the middle ornament on both sides. By this contrivance, not only time is saved, but the patterns are capable of registering more accurately than they usually do.

Reference to the Engraving, Plate VI.

The frame *a a*, fig. 1, is made to hold the rods *b b* parallel to each other, and allow them to be adjusted to any required distance apart; *c c c c* the stamps which are perforated to slide on the rods *b b*, quite even with each other: they are fixed at the proper distance on the rods, by small screws at their back, which bind against the rods. The frame *a a* has two long perforations, shewn in fig. 2, to receive the rods *b b*, which have square shoulders and fins to traverse along, and are bound fast by the screwed nuts *d d*. Fig. 3. shews one of the rods with its nuts separate. The small nut *e* screws on after the stamps, to keep them from accident by falling off before they are adjusted. It is evident, that by sliding the stamps *c* along the rods *b*, and these rods along the frame *a*, they may be adjusted to suit any size and form of book; and the stamps so held together, quite even and straight, may be laid truer and quicker on the books when the corners are done. If the same stamps are to be used for the centre, they may be transposed on the

rods, and adjusted to suit the centre, as shewn at *f f*; but it will save time, and do the work truer, to have four rods, *b b* and *f f*, to hold the corner and centre stamps at the same time: for then one putting in the press does one side of a book, and all will be exactly alike, without the care of the workman. If the frame *a a* is made a little wider than the thickness of the stamp on the pattern side, it might be adjusted to touch the front edge of the book, which would keep the patterns quite straight and equidistant on all the books.

No. VII.

PLUMBAGO FOR CHRONOMETERS.

The GOLD ISIS MEDAL *was presented to Mr.* L. HEBERT, *Queen Street, Chelsea, for his application of prepared Plumbago instead of Oil for Chronometers. The following Communication has been received from Mr.* HEBERT, *and a Sample of the Plumbago is in the Society's Repository.*

SIR,

PERMIT me to offer you a few observations upon a subject which fifteen years of experience have produced; namely, the substitution of plumbago for oil in the rubbing parts of chronometers, in order that they may be laid before the Society of Arts, and thus, if approved, become beneficial to the world at large.

The use of sidereal and mean-time pieces in observatories, at sea or on land, is to measure the motions of the heavenly bodies, and by them ascertain their right ascension in time, their distance from a given point, and to obtain the longitude of places upon the earth. From that the word *chronometer* (measurer of time) is derived; but very few deserve that appellation. Whatever may have been the skill of the maker, and the care he took for their perfect construction, the observer must not expect to find them infallible; and, however well regulated they were at first, they will not remain so permanently: their rate of going will be accelerated or retarded by the temperature of the atmosphere, which causes all metals to expand or contract, more or less, and that, in an irregular degree, will create a variation in their movements; and though innumerable experiments have been tried to render them perfect chronometers, by composing pendulums or balances that might contravene the atmospherical influence, yet none has been found that would accomplish that desideratum; because it is evidently proved, that metals, after having been worked several times by heat and cold, never return to their primitive state at the same temperature.

But, Sir, this is not the only difficulty chronometer-makers have to combat against: there is another powerful enemy, which is always baffling their success, and that is *oil*. The different degrees of fluidity and quality of that liquid are also great alterants of clock-movements: in hot climes it will become absorbed; in cold weather it will congeal; in both instances impede the freedom of motion. This, nevertheless, may be remedied by a substitute which I discovered about fifteen years ago; and in order to befriend science, I will here name it, and explain the way

of applying it to time-pieces, for the benefit of those who do not mind a little trouble, and have patience enough to go through the process it requires. It is plumbago, which, when carefully used, will last a considerable time without the necessity of being renovated. But much depends upon its quality: it must be of the best, free from grits, and the tenderer the better: a spurious sort would endanger the holes and pivots, causing mischief, instead of preventing it. The purest I could procure was from Mr. Langdon, the first pencil-maker in London, (perhaps in the world,) Great Russell Street, Bloomsbury, who, after I had explained to him the purpose it was intended for, considered its choice of the utmost importance, and selected some of the best, which answered my utmost expectation. I applied it to my sidereal time-piece in January 1816. Since that time it has been cleaned three times without the plumbago being renovated: the friction places were only wiped with a fine muslin rag; and now, 1827, it goes as well as ever. I must beg leave to observe here, that I found then an insurmountable difficulty in charging the jewelled pallets of the escapement with the plumbago; but I obviated that by applying it to the friction-plane of the teeth of the swing-wheel; so, ever since, the clock has gone without oil.

The process of applying the plumbago is thus:—Take about a quarter of a pound of the purest black lead, the brighter the better; reduce it to a very fine powder in a metal mortar, and to judge if it is fine enough, take a small pinch of it between your fingers; after rubbing it a few seconds, if it does not feel lumpy nor gritty, but smooth and oily, it is good, and beaten enough; have a glassful of filtered water; take some of the powdered plumbago with the clean blade of a knife, spread it on

the water, and stir it well; cover the glass, and let it stand for two or three hours; at the top of the water will be a kind of cream, skim it off with a card, and lay it upon a sheet of paper; when dry, put it in a box, to exclude the dust from it; put the sediment aside; repeat the process with some other water and plumbago, until you have acquired a sufficient quantity of fine powder for your purpose; when the whole of the powder is dry, pound it again in the mortar, or bruise it with the bowl of a silver spoon, upon a clean sheet of paper, and repeat the same process two or three times; if the lead is pure, no more sediment will go down; if some does, wash and dry it once or twice more; as soon as no sediment remains, you may be sure that the plumbago dust is pure, and cannot cause any mischief to the pivots and holes; pour some alcohol (the strongest spirits of wine) into a small glass; having wiped the pivots of the wheels and the holes of the plates very clean, immerse them into the spirits, and immediately into the plumbago powder: they will be covered with it; take a small pencil brush, such as is generally used by miniature painters, dip it into the spirits, and fill the pivot-holes with it; introduce some powder into them with your finger, by rubbing the plates over the holes, till the powder is even with their surfaces; put in the wheel, and make it revolve in the frame for five or six minutes; do the same to every wheel, and also repeat it two or three times; then the holes and pivots will be charged with a thin crust of plumbago, smoother than any polish you can give them; the piece will go twice as long without cleaning as with oil; and truly, if its movement is entirely secluded from dust, there will be no necessity of cleaning it for twelve years, which will be about the time for renovating the plumbago.

The sidereal time-piece to which I have applied the plumbago was made with my own hands; and as its rate of going has been astonishingly good, and it is the only one of that construction ever seen, I will give you a short description of it. It goes eight days; the movement is not very different from others, except that the swing-wheel is at the bottom and outside of the plate, supported by a steel cock: the pivot-holes of the swing-wheel and the pallets are jewelled. The escapement is fixed upon the pendulum, and swings with it: its pallets are susceptible of a horizontal and a vertical adjustment by means of three screws; they lock and unlock the wheel at the diameter, or fifteen teeth: the vibration of the pendulum, between the unlocking and locking, is an arc of 1° 10′ upon the index plate, and the full swing 1° 30′, making *an ultra* of 10′ of a degree on each side. The clock is fixed to a cast-iron plate, fastened on the back of the case, and is adjusted in beat by two screws, acting laterally. The pendulum, which has nearly the form of a pawnbroker's sign, is suspended upon a potence fixed at the back of the case: its perpendicular arm, seven inches long, rests upon a stud at the bottom, even with the pallets; its expansion is upwards, and acts as a compensation for the length of that part of the pendulum between the suspension and the pitching of the pallets into the wheel. Upon the horizontal arm of the potence, and over the slit, is a screw-nut, by which the pendulum is hung: it serves to adjust the depth of the pallets into the swing-wheel. The pendulum-spring is one inch broad, and its greatest flexibility is at the horizontal diameter of a hole three-quarters of an inch wide; below the spring, at about six inches and a half from its pliability, is a plate, to which is affixed the escapement, having a perpendicular slit in the

middle, wide enough to admit the cock of the swing-wheel through, and to let the pendulum vibrate: to that plate is screwed a steel rod, at the end of which slides the pendulum bob. Above that bob and from its sliding-piece branch two arms with elbows, having a slit at each end to admit the pivots of the two levers which support the thermometer bobs. On the steel rod is a brass tube, whose calibre is just wide enough to admit the rod and to slide freely over it: that tube is fastened to the rod at its upper end, and at its lower rests upon those of the two levers; so that, by its expansion or contraction, it causes the two thermometer bobs to rise or fall, whilst at the same time one acts in a contrary way, and consequently produces a compensation. Those bobs weigh three pounds each, including one pound of mercury in each of the phials inlaid at the back of them; they slide literally upon their respective levers to adjust the compensation. The time-bob weighs five pounds. The clock has no pulley: the weight itself, which is only ten ounces, acts as one. It has gone with five ounces during six months. When I had a fixed observatory in Vauxhall Walk, that clock was often proved eight or ten times a-day by the transits of the sun and stars, if the atmosphere permitted; and in the last six months, after all the improvements I deemed necessary were made; viz. from July 19th to February 24th, it never varied more than $9''\cdot8 +$ in time, nor above $\frac{36}{100}$ of a second from its rate.

Such have been the happy results of my experiments; and I have no doubt that such exactness was owing, not only to the correctness of its compensation, but also to the stability of motion produced by the *plumbago*. I am aware that to those who are averse to care and attention, the above process will appear troublesome; but, Sir,

what is a day's labour once in ten years? Let those, then, whom the love of improvement and their own reputation stimulates, try it; I am confident that their endeavours will be crowned with success, and with the pleasure of having eminently contributed to the benefit of mankind.

I am, Sir, &c. &c.

L. HEBERT,

Geographer at the Colonial Department,

3, Queen's Terrace, Queen Street, Chelsea.

T. HOBLYN, Esq.

Vice-President, &c. &c.

No. VIII.

DETACHED ESCAPEMENT.

The Large SILVER MEDAL and FIVE POUNDS were presented to Mr. ROBERT MAY, New Road, Deptford, for his Detached Escapement: a Model of which has been placed in the Society's Repository.

THE difficulty is so great of effecting a completely detached escapement, in which the alternate impulses given to the balance shall be equal and independent of the train, that, notwithstanding its theoretical advantages, watch-makers have been driven to the necessity of abandoning it, and of equalising the oscillations of the balance by other means. The escapement invented by

Mr. May is, on the whole, sufficiently simple and completely detached, as the balance receives its impulse from two springs quite independent of the train. It belongs to that species called remontoire; and though it has been hitherto constructed only in model, and has not been actually attached to a watch, the ingenuity of the invention appeared to the Society worthy of their medal and of being given to the public.

a a, figs. 1 and 2, plate ii. are the upper-frame plate which supports the escapement; *b* is the balance, the arbor or axis of which passes through the plate *a a*, and bears the short pallat *c* and the long one *d*; *e* is the escapement wheel; *f* and *g* are two pallats alternately raised by the teeth of the escapement wheel; *h h* are two springs which depress the pallats to their bearings on the pins *i i*, and at the same time put in action the impelling levers *k l*.* These latter are attached to the pallats by means of two screws working through oblong holes, so as to allow a certain degree of adjustment; the screw of pallat *f* is shewn at *m*, that of pallat *g* is on the under side. The locking pallat *n* has an arm attached to its arbor; it is turned up and pierced at the end by a square hole, shewn separate at *q*, fig. 4; *r* is a hair spring fastened at one end to a stud on the arm *o*, and the other end passing through and projecting a little beyond the square hole at the turned-up extremity of the arm. (The details of the locking pallat, with its arm, are shewn in figs. 3, 4, 5.) *s* are two banking pins at the back of the locking pallat to limit its motion.

Fig. 6 is an elevation to shew the position of the works: *v* is an additional piece on the cock *w*, on which

* In fig. 2 the lever *l* is erroneously marked *e*.

the upper pivots of the pallats, *f* and *g*, are fixed; it is also shewn in position in fig. 1, but has been removed in fig. 2; *z* is the balance spring; the lower plate, which supports the stud 1, is not shewn.

The following is the action of the escapement:—The tooth *t* (fig. 2.) of the escapement wheel, impelled by the mainspring or weight, has passed along the face of the pallat *f*, raising it, and, at the same time, slightly contracting the spring *h*; the tooth *u* is in contact with the hook of the locking pallat *n*, and the balance, with its pallats or arms, *c* and *d*, is moving in the direction indicated by the arrow. When *d* has arrived at the point marked by a star, the unlocking pallat *c* will have come in contact with the end of the hair spring *r*, will have forced it in contact with the farther side of the square hole in which it is placed, will have moved the lever *o*, and with it the locking pallat *n*, so as to liberate the tooth *u*; at the same time the tooth *t* drops off the end of the pallat *f*, and thus allows the spring *h* to expand; the consequence of this is, that the pallat *f* drops till it is stopped by the pin *i*, and the impelling lever *k* strikes against the pallat *d*, and thus gives its impulse to the balance *b*. Immediately afterwards, the tooth of the escapement wheel that is in contact with the pallat *g* moves along its face, compresses its spring *h*, slightly depresses the impelling lever *l*, so as to enable the pallat *d* to clear it, and brings it in a position to give its impulse to the same pallat on its return; at the same time, the tooth of the escape wheel preceding *u* has become locked on the other hook of the locking pallat *n*, and the parts are all brought to the position shewn in fig. 1.

It is obvious that, on the return of the balance, the

pallat *d* would not come in contact with the lever *o* of the locking pallat, if it were not that the hair spring *r*, as soon as it got free from the unlocking pallat *c*, had returned, by its own recoil, from the side to the middle of the square hole at the end of the lever; and in so doing, had advanced just far enough to be acted on by the unlocking pallat on its return.

The best form for the springs *h h* would be that of the pendulum spring, as there would be no friction.

The proposed advantages of the above construction are — 1st. The impulse given to the balance by the two springs *h h* is equal, the springs being so. 2d. The train, not being concerned in giving the impulse, need not be an expensive one, neither need any of the holes to be jewelled. 3d. The whole of the friction on the balance is that which exists between the impelling levers and the pallats of the balance, and that is very little, as the levers describe small axes of a large circle. 4th. The balance is at liberty to move almost twice round, and therefore will probably not want any banking.

No. IX.

DETACHED ESCAPEMENT.

The LARGE SILVER MEDAL *was presented to Mr.* WM. MELVINE, *for his Detached Escapement for Chronometers: a Model of which has been placed in the Society's Repository.*

22, *Ironmonger Lane, Cheapside,*
April 6, 1828.

SIR,

I BEG to lay before you a model of an invention, which has for its object the rendering the balance of chronometers totally independent on the train, and which is different from any plan which, as far as I know, has hitherto been laid before the public. In this escapement, the impulse is given by the unbending of a spring, and this spring is rebent every time the balance performs its motion. One of the peculiarities of this escapement is, that the *balance* does *not* lift the detent from the teeth of the escapement wheel, as is the case in all other escapements. This is done by the spring, but not *till* the balance has received its impulse; and thus an important advantage is gained, as the motion of the balance can neither be accelerated nor detained by any irregularities in the train. This will be seen at once, on examining the model. The pallat, which gives the impulse, is kept in its place by being allowed to go a little past the centres of the pivots by which it is connected with the spring. The balance has to bring it to the centre, and then it receives its impulse. As soon as the pallat gives the

impulse to the balance, and is *completely freed from it*, it unlocks the detent, and is instantly placed, by the action of the train, in its former place, where it remains till the balance comes round again. It appears, therefore, that it is of no consequence to the balance whether the power of the train be great or small, provided it has sufficient force to bend the spring. This is shewn in the model, in which, having no fusee, the action of the main spring must be very unequal. I must, however, remark, that the model shews the invention in its simplest and rudest form, and of course to a very great disadvantage; and it will be perceived that, should it come into use, much improvement may be effected in the arrangement of its parts by any *practical* watchmaker. Living in a country town in Scotland, I found that I could not get a time-piece on the principle made to my mind; I have, therefore, satisfied myself with the present model, which is the *first* embodying of the plan; and being in London, I take the opportunity of presenting the model, and shall feel proud if it is thought worthy of a place in the Repository of the Society of Arts.

I am, Sir,

&c. &c. &c.

A. Aikin, Esq.
Secretary, &c. &c.

William Melvine.

Reference to the Engraving. Plate III.

Fig. 1 and 2 front views, and fig. 3 a side view of the escapement; *a* the escape wheel; *b*, fig. 3, the pallat arbor; *c* the balance; *d* the locking detent; *e*, figs. 3,

4, 5, and 6, the pallat spring: it gives the impulse to the balance, and by means of the peculiar manner in which it is connected to the pallat arbor *b*, by the arched piece *f* and short arm *g*, it becomes self-locked. The action of this spring is always from the pallat arbor, as shewn by the arrows: in figs. 3 and 4 it is in the neutral position, its action being against the arbor; and when the train, acting through the tooth *h* against the pallat *i*, has brought the pallat or impulse lever *j* past the neutral point, towards the position shewn in figs. 1 and 5, the spring *e* brings it to that position, and holds it there: the tooth *k* then rests against the detent *d*; the balance pin *l*, fig. 1, in vibrating from *m*, has passed the very slender spring *n*, which gives way to let it pass: being fastened at *o*, and being free in all that length, its resistance is as nothing; but, on the balance returning, the pin *l* comes on the other side of the spring *n*, (which is prevented from yielding this way, it being backed by a stop *p*, shewn in fig. 7), and carries the lever *j* with it, which raises the arm *g* from its position fig. 5, till it passes the neutral position fig. 4; the spring *e* then carries the lever *j* quicker than the balance was moving, and therefore gives an impulse to it by pressing against the pin *l*, till it comes to the position figs. 2 and 6, where it has just passed the pin *l*, before the train is unlocked: the balance is, therefore, perfectly detached, and continues its course, for it is only by the further motion of the lever *j* and pallat *q* that the detent *d* is raised, as shewn by the dotted lines fig. 2; the spring *e* cannot act farther than to unlock by raising the detent *d*, the pallat *q* resting against the detent pin *r*, (shewn separate in fig. 8), and the detent is detained by its stops *s s*; but the moment the tooth *k* escapes, the tooth *t* presses against the pallat *i*, and instantly brings back the lever *j*

to the position fig. 1, where the spring *e* holds it, as shewn in fig. 5: the connecting piece *f* rests upon the collet of the arm *g*, when the lever *j* is brought to the right position, the collet *g* and the detent stop *s* limiting the motion of the impulse lever *j* to the left and right. Thus the impulse given to the balance is always a perfect repetition of the same action of the spring *e;* and whilst the impulse lever *j* is moving from the position fig. 4 to that in fig. 2, all the work the balance has to do is to raise the arm *g* from the position fig. 5 to that of fig. 4, which is a perfect repetition of the same motion, the balance never having any thing to do with the train, or with any inequality producible thereby, for on returning, it always finds the lever *j* and spring *e* in the same quiescent state, and the pallats totally unconnected with the train; the balance merely liberates the spring *e*, receives an impulse from it, and goes on; the spring *e* having left the balance, unlocks the train, or lets one tooth escape, which immediately returns the lever *j* to the first position, where the balance again finds it.

No. X.

SELF-ADJUSTING PENDULUM.

The LARGE SILVER MEDAL *and* FIVE POUNDS *were presented to Mr.* T. JUDGE, *Newend, Hampstead, for his Model of a Self-adjusting Pendulum, which has been placed in the Society's Repository.*

SPRING pendulum clocks, especially those with small arcs of vibration, such as most of the French table-clocks, are often found to be out of beat when moved from one place to another, or when placed on a surface that is not perfectly level, and, from the same cause, will often stop altogether. This circumstance operates so much against the use of them, that some clock-makers have suppressed the pendulum altogether, and substituted in its place, for table-clocks, the duplex escapement with a balance and a spring; thus abandoning a good principle for one less perfect, and more costly and difficult of execution.

Mr. Judge proposes to prevent such clocks from getting out of beat, even when placed on a considerably inclined plane, by suspending the part which carries the pendulum, the crutch, and the pallets, on the two collets which receive the axis of the escape-wheel, by making this part freely movable on the collet, and appending to it a heavy pendulum, the effect of which is to keep the parts above mentioned always vertical, notwithstanding the inclined position of the other parts of the clock.

Reference to the Engraving, Plate III.

This adjustment is effected by adding to the clock the frame *a b*, which is shewn separate in figs. 9, 10, and 11, being the side, top, and front views, and attached to the clock in fig. 12; this frame swings freely on the same projecting studs at *c c*, which receive the pivots of the escape wheel *d*, and is kept upright over the wheel by a weight *e*, at the bottom of the arm *b*. Instead of swinging the pallets *f f* in the clock plates, they are swung in this frame, and the holes *g g* in the clock plates are enlarged and lengthened as in fig. 13, to allow the pallat arbor *h* to move laterally; the pendulum *i* also hangs from this frame at *j*; *k* is the crutch, as usual. Now it is evident, that as the frame which holds the pendulum and pallats turns on the same centres with the escape wheel, if the pendulum is once adjusted it will always be so, whether the clock leans on one side or the other; and as the weight *e* is so much farther from the centre *c* than the pendulum-stud *j*, a very moderate weight will always overpower the pendulum, and keep the frame *a b* upright. But to prevent the motion of the pendulum or any other circumstance from causing the weight *e* to vibrate, a screw is fixed in the bar *m*; this projects through the hole *n n*, in the middle of the frame *a b*, and which is elongated to allow of the lateral motion; and whenever the clock has been moved or the adjustment doubted, you have only to stop the pendulum and loosen the nut *o*, which binds the frame *a b* fast, to let the weight *e* gravitate, then fasten it again by the nut *o*, and the pendulum will be in beat.

No. XI.

EXPANDING PISTON.

The LARGE SILVER MEDAL *and* TWENTY POUNDS *were presented to Mr.* ROBERT MOTTERSHEAD, *for his Expanding Piston for High-pressure Steam-Engines; a Model of which has been placed in the Society's Repository.*

FOR low-pressure engines, cotton packing is sufficient to prevent the steam from escaping between the piston and the sides of the cylinder. But in high-pressure engines, the heat and elasticity of the steam are such as to destroy the accurate fitting of the cotton packing, and thus to necessitate its renewal at inconveniently short intervals.

Expanding pistons, composed entirely of metal, have accordingly been suggested, have been the subject of patents, and have been brought more or less into use. In one of the best of these the circumference is divided into segments, between every two of which is a triangular wedge, having its point towards the circumference, and its base towards the centre. Each of these wedges is backed by a strong spring, the tendency of which is to force outwards the point of the wedge, and consequently the segments against which it bears. But, in practice, the point of the wedge has been found very liable to mark, and finally to score and destroy the cylinder, against the sides of which it is continually

pressing with a force greater than that exerted by the segments.

Mr. Mottershead's piston is composed of two layers, each of which consists of six segments; of these, three alternate ones are pinned so as to form immovable abutments for the support of the three movable ones which are curved internally, and have each a strong spring, placed like a bowstring across the internal curve, and bearing against the sides of a cylindrical core that fills up the inside of the piston. Hence it is evident that these movable segments are continually pressed outwards by the action of their respective springs. The movable segments occupy a little larger part of the exterior curvature than the fixed ones do; and therefore, by so placing the two layers of segments that the three movable ones in the upper layer shall correspond with the three fixed ones in the lower layer, an expanding piston is produced, every part of which that touches the cylinder is a segment of a circle of the same magnitude as the cylinder itself, and, while it prevents the escape of steam, has no sensible wearing on the sides of the cylinder.

Messrs. Hefford and Thomas, engine makers, in whose employ Mr. Mottershead is, have made trial of one of his expanding pistons for the last seven months; the inside of the cylinder was found, at the end of that time, not to be in the least degree scored or marked, but retained its polish perfectly. It works without oil, and has been proved by a water pressure of 700 lbs. on the inch. The composition of which the piston is made is bronze, consisting of seven parts copper and one part tin. Three other engines have more recently been fitted up by the same makers with Mr. Mottershead's expanding piston.

Reference to the Engraving, Plate VI.

The expanding circumference of this piston is divided into six segments, which alternately over and under-lap each other, thereby securing a sufficiently equal pressure all round against the cylinder. Fig. 8 is an elevation, and fig. 9 a plan, of the piston complete; it is formed in two halves or layers, exactly alike, each containing three sliding segments: they are bound on the piston-rod *c* by the shoulder *d* and the screwed nut *e*. Fig. 10 shews one, the lower half, complete; *m m m* are the fixed parts, and *f f f* the three sliding segments, backed and protruded by the springs, *g g g*. Fig. 11 is the upper half without the sliding segments, *i i i* being the three places in which they slide: near one end of each, at *j j j*, are lengthened holes to receive the pins *k k k*, fig. 10, of the sliding pieces, and limit their motion; one is shewn in the elevation of a sliding piece, fig. 12. These pins also prevent the segments from falling or being pushed out by their springs farther than is shewn in figs. 8, 9, and 10, at the same time that they allow them to be pressed in flush with the diameter of *a* and *b*, so as to enter the cylinder. Fig. 13 is one of the sliding pieces *h* separate; fig. 14 its spring, which is nearly as deep as the segments are thick. The three abutments, or filling pieces *l l l*, between which the segments slide, are screwed on to the part *a*, and three more *m m m* on the part *b*, with one screw and two steady pins to each. Fig. 15 is a section of the part *b*, without the filling pieces *m*; *n* is a cavity which, in the part *a*, receives the shoulder *d*, and, in the part *b*, the screw nut *e* of the piston rod: *o* is a hole in part *b*, to receive a steady pin *p*; these, on the part *a*,

are so placed as to cause the sliding pieces of one part to lie over the filling-pieces of the other, and thus form a continued yet sliding band of metal round the piston. The points of the screws and heads of the steady pins in the filling pieces, and the edges of the springs *g*, are purposely kept a little below the surface, to prevent them from coming in contact with the opposite sliding pieces. Before the springs *g* are put in, the segments *f* and *h* are pushed in flush with *a* and *b*, and bound fast; the whole is then turned in the lathe together as one cylinder. The sliding and the filling pieces are perfectly flush or even with each other; but the circular prominences marked *a* in fig. 11, and *b* in figs. 10 and 15, project in the least possible degree beyond the segments, so that, when all the parts are bound together, the sliding pieces have just room, and no more, to move easily.

No. XII.

TURNING LATHE.

The GOLD ISIS MEDAL *was presented to Mr.* JAMES CLEMENT, 21, *Prospect Place, Southwark, for his improved Turning Lathe.*

IT is almost unnecessary to state, that persons who have been in the habit of turning different kinds of metal must be aware, that if it passes the tool at too great a velocity, it will soften and grind away the tool; consequently,

lathes have been made with wheels, riggers, drums, &c. of different diameters, so as to alter the speed of the lathe mandril according to the hardness of the metal, and the diameter of the thing that is to be turned. For turning or boring cylinders, or any thing nearly of equal diameter, a uniform motion is all that is required, and, by the means of wheels, drums, riggers, &c. of different diameters working into each other, or by the motion of one communicated to the other by straps or bands, answers the purpose very well; but when a plane surface is required to be turned, the motion of the lathe mandril or the thing to be turned, ought to be diminished or increased in proportion as the tool is moved to and from the centre; then that part of the plane where the tool is applied would pass the tool always at the same velocity, and if a proper speed is obtained at the beginning, the tool will last for a considerable time without being much injured, and the surface will be very nearly perfect; but the motion of the lathe ought to be diminished or increased without stopping the lathe, otherwise the tool will make a mark or false cut on the surface, when the lathe is stopped to alter the motion. It may here be remarked, that if the motion of the lathe be at a proper speed, when the tool is at the greatest distance from the centre, and that the tool be made to advance towards the centre, and the lathe to continue at the same velocity, the tool would not be more injured when it arrives at the centre than if the velocity of the lathe or mandril were increased in proportion as the tool advanced towards the centre; this, it is acknowledged, would be the result, but then there would be a sacrifice of nearly one-half of the time, which is demonstrable by the annexed diagram.

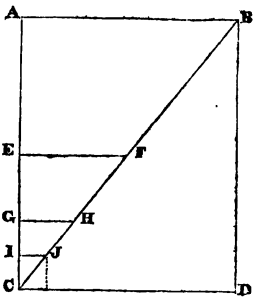

Suppose the parallelogram A B C D to represent the time that would be required to turn a surface. Draw a diagonal line B C, bisect the line A C at E, E C at G, and G C at I, then draw the lines E F, G H, and I J, parallel to A B; let C represent the centre, A C = the radius, and A B = the circumference or time of one revolution at its greatest diameter; therefore the lines E F, G H, and I J, will also represent their circumference, or time of one revolution, at their respective radii at E, G, and I; and as the lines A B, E F, G H, and I J, are one-half the length of each other, so will their revolutions be performed in similar proportions of time, and the velocity of the lathe-mandril will be increased in the inverse ratio, as the length of the lines A B, E F, G H, and I J; consequently the right-angled triangle A B C will represent the time that would be required to turn a surface, when the velocity of the lathe-mandril is increased as above described; and the parallelogram A B C D will represent the time that would be required, if the velocity of the lathe-mandril remains the same throughout, as when the tool was applied at its greatest diameter; for, if the length of the line A B represent the time of one revolution at its greatest diameter, the line C D will represent the time of one revolution when the tool has arrived at the centre; therefore, as the length of the line C D is equal to A B, so will all the intermediate revolutions be performed in similar spaces of time.

What length of time would be required to turn a surface of cast iron, the diameter being 24 inches, to

make 50 revolutions or cuts in each inch of the radius, and to pass the tool at the rate of 15 feet per minute? × the circumference = 75·39 inches by the radius = 12 inches, then × the product = 904·68 by 50, the number of revolutions or cuts in one inch of the radius, which will be = 45334 inches, ÷ by 12, will reduce it to 3769·5 feet; ÷ again by 15, will bring it to 251·3 minutes; then ÷ by 60, will reduce it to 4 hours 11·3 minutes, consequently this would be the time, if each revolution be performed in equal portions of time; but if the velocity of the lathe-mandril on the surface to be turned be increased so as to pass the tool always at the same velocity, then the time will be only one-half of the above; for in this case we must multiply the radius only by one-half the circumference, as that will be a mean proportion of the lengths of all the intermediate revolutions.

To turn a surface of cast iron, the velocity of the part where the tool is applied should not exceed from 10 to 15 feet per minute; but this will depend on the hardness of the iron.

We shall now proceed to describe the method of reducing or increasing the velocity of the lathe-mandril, without stopping the lathe, the velocity of the first mover or axis, remaining the same throughout.

Plate X. fig. 1, is a geometrical elevation of the back part of the lathe; fig. 2 is an end elevation, viewed from the left-hand end of fig. 1, having the poppet-head removed; fig. 3 is a plan, or bird's-eye view, of the lathe. The same letters and figures refer to the same parts in all the views.

A and B are two cones fixed upon their axes C C and D D; the axes are placed parallel to each other, and are

supported, and turn in plummer-blocks E E and F F; the plummer-blocks are fixed to the sides of two upright posts G and H, the posts being previously placed perpendicularly, and their ends secured to the floors above and below; the lower plummer-blocks F F have oblong holes, or slits, at each end, through which the bolts pass that secure them to the posts; the use of the slits is to admit of the plummer-blocks being slid up or down, so as to regulate the tightness of the band or strap I; below the plummer-blocks F F are fixed to the posts two plates or blocks J J, having a projecting boss at their upper ends, which contains an adjusting screw, for the better convenience of raising or lowering the plummer-blocks: there are also two small brackets K K fixed to the side of the posts; they are also shewn on a larger scale at figs. 5, 6, and 7. Fig. 5 is a similar view as shewn in fig. 1; fig. 2 is a plan, and fig. 3 an end view. The use of these brackets is to support the ends of the rods L L; the brackets must also have an adjustment for raising or lowering them, so as to have the rods in a line with the crossing of the strap I, as it passes from one end to the other of the cones A and B; the rods ought also to be fixed parallel to each other; the use of them is to support and guide a carriage M through holes, in the ends of which the rods pass; and it must be at liberty to slide freely from one end of the rods to the other. The carriage M contains three rollers, or cylinders, for reducing the friction or rubbing of the strap I at its crossing; the rollers are made of steel, and their ends reduced to a smaller diameter, and hardened; they are supported, and at liberty to turn freely in holes made in the sides of the carriage, which are also made of steel, and hardened; the middle roller, when at work, will run at a considerable

velocity, but the other two might almost be dispensed with. N is a triangular bracket or frame, which is screwed to the under side of the upper floor. O O is a parallel axis, one end of which is supported and turns in a hole in the lower end of the bracket N; the other end of the axis is supported in a hole in the lower part of the flanch of the plummer-block E; and on that end of the axis are two short cylinders *a* and *b*.* The cylinder *a* is fixed on the axis O O; the cylinder *b* is at liberty to turn round, but may be fixed in any position by a screwed nut *c*, which is screwed on the axis O O, against the end of the cylinder *b*: there is also a projecting flanch at the outer ends of the cylinders, which is to prevent the catgut bands *d d* and *e e* from slipping off the ends of the cylinders; *f* and *g* are two conducting pullies, which are at liberty to turn freely on cylindrical pins fixed on the brackets K K; the pulley *f* has a single groove, and the pulley *g* a double one. Close to the side of the flanch, on the side of the cylinder *a*, is a screwed hole, in which one end of the catgut band *d d* is screwed or fixed; the band is then wound once round the cylinder *a*, and brought down parallel to the side of the post G, passing beneath the pulley *g*, and the crossing of the strap or band I, round the pulley *f*, and is screwed into, or fixed in a boss at *d*, on the end of the carriage M; the band *d d* must be long enough to admit the carriage to slide to that end of the rods L L, which is beneath the larger end of the upper cone A; the axis O O, together with the cylinder *a*, must then be turned round till the

* See fig. 35, plate xii. which is a side view of the cylinders and part of the axis O O; and also fig. 36, which is a section of the cylinder. The above figures are drawn to a larger scale, so as to be better understood.

band *d d* has drawn the carriage M to the other end of the rods L L; there is also a screwed hole by the side of the flanch of the cylinder *b*, in which one end of the band *e e* is screwed; the band must then be passed once round the cylinder *b*, in a contrary direction to that of the band *d d*, brought down parallel to the post G, crossing the band *d d* round the other groove on the pulley *g*, and then screwed into a hole in a boss on the end of the carriage M at *e*. The band *e e* must also be long enough to admit the carriage beneath the smaller end of the upper cone A; the axis O O, together with the cylinder *a*, must be held fast, the cylinder *b* turned so as to tighten the bands sufficiently, and then secured in that position by the screwed nut *c*. Towards the other end of the axis O O is fixed a fusee or conical pulley P, with a spiral groove to receive a catgut band; the larger end of the fusee is nine inches in diameter, and the smaller end three inches, that is, from centre to centre of the band when in the groove. The length of the fusee is six inches, and there are two grooves cut in a circular direction round the fusee, about half an inch from each end, in which the ends of the spiral groove terminate; so that when the band has traversed from one end of the fusee to the other, the groove cut in a circular direction will prevent the band from slipping off the end. The spiral groove makes about twelve turns, therefore the diameter of the cylinders *a* and *b* must be in such proportion, that twelve turns of the bands *d d* or *e e* will draw the carriage M from one end to the other of the cones A and B. There is also another fusee Q, similar to the one above described, which is fixed on an axis *h*: but we shall describe the manner of supporting the axis *h*, &c. hereafter.

We shall now proceed to describe the construction of the lathe-mandril and its appendages.

Plate XI. fig. 1, represents a longitudinal section, cut in a vertical direction, of the mandril-frame or head, centre-head 1 *b*, and slide-tool 1 *a*, together with part of the lathe-bed. Fig. 2 is a cross section of the lathe, mandril-frame, and bed. Fig. 4 is an end view of the centre head. The figures in Plate XI. are drawn to a larger scale than those in Plate X., consequently the smaller parts will be better understood by referring to Plate XI. R R is the lathe-bed, and is supported on iron brackets, or frames, S S; that part of the frame and bed which supports the mandril-head is separated from the other part of the bed, for the better convenience of chucking any thing of a large diameter; but the frames S S are firmly screwed together; they are represented with the bottom parts broken off in fig. 1, Plate X., for want of room: T T is the mandril-frame, or head, having two hardened steel collars, or bushes, *i* and *j*, driven tight into the cast-iron head; the holes in the collars are made a little conical, both in the same direction, for the better convenience of fitting and grinding in the mandril *k*; there is no shoulder on the mandril to prevent it from being pushed too tight into the collars, but the small or back end of the mandril acts against the face or flat end of an adjusting screw *l*, which prevents the mandril from fixing itself in the collars; consequently, the friction of the small end of the mandril, running against the face of the screw *l*, will be much less than when a shoulder on the thick end of the mandril runs against the face of the collar; see fig. 3, Plate XI., which is the smaller end of the mandril, &c. drawn on a larger scale; the adjusting screw *l* is prevented from turning, by a set screw *m* pushing a cylin-

drical piece of brass against the screw *l*. Those parts of the mandril which run in the collars *i* and *j*, and also the small end and the adjusting screw, are all made of hardened steel; there is also a steel collar *n* very nicely fitted and fixed on a cylindrical part of the mandril, and the face of which runs against the face of the collar *j*, and of course prevents any shake or motion of the mandril end-ways; there is a small set screw in the side of the collar *n*, the end of which goes into a short groove in the side of the mandril, and prevents the collar from turning on the mandril; there is also a nut *o* screwed on the end of the mandril, against the end of the collar *n*, for adjusting and securing the collar in its proper place; the face of the collar *n* is also made hard. U is a short hollow cylinder or reservoir, with a flanch fitted into the back part of the frame T T, and fixed by four screws; there is also a circular groove cut in the frame beneath the flanch, in which is placed a small ring of leather, to prevent any oil making its escape between the flanch and the frame; a long hole or opening is made on the upper side of the reservoir, to admit a screw-driver or pin for the adjustment of the collar *n* and nut *o*, (without taking off the reservoir,) and also for pouring in oil. V is a thin hollow cylinder or cover, which is slid upon the reservoir, to exclude dust, &c. from getting amongst the oil; the reservoir and cover are made of gun-metal; the back end of the reservoir also contains the adjusting screw *l* and set screw *m*, altogether making a neat finish to the back part of the mandril-frame; a small notch is made in the lower side of the end or face of the collar *j*, against which the collar *n* runs, and communicates with a small longitudinal groove which extends nearly to the other end of the collar; consequently, if the reservoir U be nearly filled with oil, it will

be readily conveyed to all the moving or rubbing parts of that end of the mandril. It is found that no oil makes its escape between the collar and the mandril, unless the mandril be in motion, and then only a very few drops in the course of a day. The other end of the mandril is supplied with oil in the usual way; the middle part of the mandril is a little conical, having a longitudinal groove to receive a key. W is a spur-wheel, (made of gun-metal,) the face of which is a dividing plate; X and Y are two flat pulleys or drums fitted on the socket and screwed to the arms of the wheel; the hole in the socket of the wheel is well fitted, and ground upon the mandril; there is also a longitudinal groove in the hole of the socket, opposite that of the mandril, to which is fitted a key or feather, to prevent the wheel from turning on the mandril; the feather is fixed in the groove in the socket, otherwise the mandril would not pass through the collar *i*; there is also a small pulley, with a groove to receive a cat-gut band, and an endless screw Z fitted and secured from turning on the mandril, in a similar manner as the wheel W; *p* is a small spur-wheel or pinion, which is screwed on the mandril, and acts against the end of the socket of the endless screw, by which means the wheel W, &c. is prevented from moving end-ways on the mandril, and, of course, will form one solid mass, and greatly tend to stiffen the mandril.

A mandril that is constructed on the above plan will admit of a shoulder and screw of a much larger diameter for receiving the chucks, &c., as, from the smallness of these screws in common lathes, they are frequently twisted off. The wheels or pulleys on lathe-mandrils ought to be fixed as near to the collar *i* as they will admit of; for, the nearer the wheel, &c. is to the chuck,

the less will be the twist or spring of the mandril; but in large turning lathes it is best to have the wheels that give motion to the mandril fixed to the back or periphery of the chuck, then all the strain or twist will be removed from the mandril: *q* is an axis which is supported and turns in plummer blocks *r r*, fixed on brackets or projecting parts of the mandril-frame; *s* is a spur-pinion, which is fixed on the axis *q*; the pinion gives motion to the wheel W on the mandril, and is one-fifth of its diameter; but when a slow motion of the mandril is not wanted, the pinion may be slid along its axis, out of gear with the wheel; *t* is a drum which is fixed with two set screws to the outer end of the axis *q*, therefore the drum *t* may be easily changed for one of a greater or less diameter, as required; the longer end of the axis C of the upper cone is supported by a bracket fixed to the upper floor; there are also four drums fixed on the axis C by set screws, each having two screwed through the boss or nave against the axis C; consequently, any of the drums on the axis C may be easily moved opposite those on the mandril on the axis *q*. The drums on the axis C are 12, 18, 26, and 36 inches diameter, and a similar set belongs to the axis *q*; therefore the motion of the drums on the axis C may be communicated directly to the mandril or through the axis *q*.

We shall proceed to calculate the quickest and slowest speed that may be communicated to the lathe-mandril. Suppose the axis of the lower cone B to make 30 revolutions per minute, move the strap I to the larger end of the cone B, place the drum of 36 inches diameter (on the axis C) opposite the smallest drum Y, which is 8 inches diameter, on the lathe-mandril, and place the strap *u* on the said drums; multiply the diameter of the larger end of the cone B = 36 inches, by that of the drum on

the axis C = 36 inches; then multiply the diameter of the smaller end of the cone A = 12 inches by the drum Y on the mandril = 8 inches; then divide the product of the two first numbers = 1296 by the product of the two second = 96. 1296 ÷ 96 = 13·5 revolutions of the mandril for one turn of the winch, which × by 30 revolutions of the winch per minute, will make the velocity of the mandril = 405 revolutions per minute; but if the strap I be moved to the smaller end of the cone B, the velocity of the mandril will only be 45 revolutions per minute, or one-ninth of 405; for, as the larger ends of the cones are three times the diameter of the smaller, the velocity of the upper cone A will be increased or diminished in the ratio, as the square of the diameters the larger ends of the cones divided by the square of the diameters of the smaller ends.

$$\text{Thus, } \left\{\begin{array}{l} 36 \times 36 = 1296 \\ 12 \times 12 = 144 \end{array}\right\} 1296 \div 144 = 9.$$

It is therefore evident that all the intermediate velocities of the mandril, from 405 to 45, may be obtained without stopping the lathe, by moving the strap I from the smaller end of the upper cone A to that of the larger. By comparing the greatest velocity of the lathe-mandril, = 405 revolutions per minute, with that of the slowest, = ·66 of a revolution, (see the following Table,) they will stand thus:

$$\text{As } \cdot 66 : 405 :: 1 : 615 \cdot 15;$$

consequently, one revolution of the lathe-mandril, when at its slowest speed, will require the winch on the axis of the lower cone B to be turned 45 times round, and at the rate of 30 revolutions per minute, which will be equal to 1·5 minute, and which is slow enough to turn a surface of cast iron 6 feet diameter, passing the tool at the velocity of 12 feet per minute.

The following Table shews the different velocities or number of revolutions per minute that may be given to the lathe-mandril, (by fixing the drums on the axis C, in succession opposite those on the mandril and axis *q*,) supposing the winch on the axis D to make 30 revolutions per minute.

The number of Turns per Minute of the Cone E.	Diameters of the Cone B in Inches.	The Number of Turns per Minute of the Cone A, and Drums.	Diameters of the Cone A.	Diameters of the Drums to be used on the Axis of the Cone A.	Diameters of the Drums on the Mandril.	Diameters of the Drums on the Axis *q*.	Number of Teeth in Pinion on the Axis *q*.	Number of Teeth on the Wheel W on the Mandril.	Number of Turns per Minute of the Mandril, when the Strap I is at the larger end of the Cone A.	Number of Turns per Minute, when the Strap I is at the smaller end of the Cone A.
30	12	10	36	36	8	—	—	—	45	405
—	—	—	—	26	—	—	—	—	32·5	382·5
—	—	—	—	18	—	—	—	—	22·5	202·5
—	—	—	—	12	—	—	—	—	15	135
—	—	—	—	36	16	—	—	—	22·5	202·5
—	—	—	—	26	—	—	—	—	14·62	131·58
—	—	—	—	18	—	—	—	—	11·25	101·25
—	—	—	—	12	—	—	—	—	7·5	67·5
—	—	—	—	36	—	12	16	80	6	54
—	—	—	—	26	—	—	—	—	4·33	38·97
—	—	—	—	18	—	—	—	—	3	27
—	—	—	—	12	—	—	—	—	2	18
—	—	—	—	36	—	36	—	—	2	18
—	—	—	—	26	—	—	—	—	1·44	12·96
—	—	—	—	18	—	—	—	—	1	9
—	—	—	—	12	—	—	—	—	·66	5·94

We shall now proceed to describe the construction of the slide tool and its appendages. There are four general views of it in Plate X., which shews its connexion with the lathe and the carriage M, &c.; but as they are drawn to so small a scale, it will be better to refer to Plates XI. and XII., where they are shewn on a larger scale.

Fig. 1 *a*, Plate XI., is a section of the slide tool cut by a plane parallel to the bed of the lathe.

Fig. 1, Plate XII., is a view of the face of the chuck *v*, the slide tool and the apparatus for communicating motion to it, together with a section of the bed of the lathe. Fig. 2 is a plan of the slide tool, &c. projected from fig. 1. The rest of the figures up to 30 are a detail of the various parts of the slide-tool; and the remaining figures a detail of the apparatus for giving motion to the carriage M, as before described. Fig. 3, Plate XII., is a view of the under side of the base plate of the slide-tool. Fig. 4 an end view, and fig. 5 an edge view, together with a section of the lathe-bed R R, &c. 1 is a parallel plate, to the under side of which are screwed two parallel pieces 2 2, and parallel to each other; the inner edges of the two pieces 2 2 are bevelled, and form an angle of 45° with the base plate 1. Fig. 6 is a view of the under side of an apparatus for guiding and also fixing the base plate 1 on the lathe-bed; and fig. 7, an end view, which is constructed of the following pieces: 3 is a parallel plate or slide, having its edges bevelled to the same angle as the pieces 2 2, and is nicely fitted into, and at liberty to slide in, the dove-tailed groove formed on the under side of the base plate 1, and between the pieces 2 2. 4 is a piece which is firmly screwed to the under side of the dove-tailed slide 3, and is also nicely fitted between the sides of the lathe-bed, so as to slide easily,

but without any shake: in the middle part of the piece 4 is a screwed hole to receive a screw 5. 6 is a plate or washer, which extends across the under part of the lathe-bed; it has also a hole in the middle to receive the neck, but not the head of the screw 5. There are two pieces 7 7, which are also screwed to the under side of the dove-tailed slide 3, and at right angles to it. The pieces 7 7 are adjusted to the outer edges of the lathe-bed, which prevents it from springing outwards; the dove-tailed slide 3 is made a little thinner than the pieces 2 2, consequently, when it is placed across the lathe-bed, and the base plate 1 is slid upon it, the pieces 2 2 of the base plate will rest on the lathe-bed, but the dove-tailed slide 3 will not touch it; therefore, when the screw 5 is screwed into the piece 4, it will fix the base plate at right angles to the lathe-bed; but when the screw is slackened, the base plate may be slid across the lathe-bed as required, or it may, together with the dove-tailed slide 3, be slid along the lathe-bed and fixed to it in any situation. 8 is a short cylinder with a flanch at each end (see fig. 8, which is a side view); the lower flanch is fixed at the end and on the upper side of the base plate by four screws. 9 is the bed of the slide-tool (see fig. 11, which is a side view, fig. 12 a cross section, and fig. 13 a view of the upper side of it); the under and upper sides of the bed 9 are level and parallel to each other; near to one end, and on the lower side of the bed 9, is formed a circular flanch or plate, equal in diameter to the upper flanch of the cylinder 8; each of them has a hole in the centre, in which is a screwed bolt; the head of the bolt is sunk level with the upper side of the plate of the bed, and the screwed nut is sunk level with the under side of the flanch or top of the

cylinder. That part of the bolt which passes through the lower flanch is fitted into a six-sided hole, which is to prevent the bolt from turning round, otherwise the screwed nut would be undone when the slide-tool bed 9 is turned in one direction, and perhaps be too tight when turned in the other; but when well fitted, the slide-tool bed may be turned in any position, and fixed by two screws 10 10 (see fig. 1, *a*, Plate XI.) In each side of the flanch of the slide-tool bed, and concentric with the centre screw, is a circular groove, through which the screws 10 10 pass, and screw into holes made in the upper flanch of the cylinder 8; these circular grooves will admit of the slide-tool bed to be turned a quarter round, without taking out the screws 10 10. There are eight screwed holes in the upper flanch of the cylinder 8 (concentric with the centre screws) for receiving the screws 10 10, therefore the slide-tool bed may be fixed in any required position. The outer edges of the upper side of the slide-tool bed are bevelled so as to form a dove-tail, and they are also made parallel to each other; there is an opening between the sides to admit of a screw 11, and its screwed nut 2; the necks of the screw 11 are supported, and turn in holes made in the end of the slide-tool bed 9; the caps that form the upper half of the holes are secured with two screws, and must be removed when the screw 11 is put in or taken out, for the necks of the screw are only the diameter of the bottom of the thread. On the right hand end of the screw 11 is fitted a cylindrical collar 13 (see fig. 26), which is a section of that end of the screw and collar, and fig. 28 a side view; they are drawn to a scale of double the size of fig. 2, so as to be better understood); there is a hole between the collar and the screw, in which is fitted a pin or key, to prevent the collar

turning on the screw; the shoulder of the collar is hardened and works against the end of the bed. 14 is an adjusting screw, which is screwed into the end of the long screw 11, and the head acts against the end of the collar 13, so that the distance between the shoulder of the collar and the shoulder at the other end of the long screw 11 may be adjusted at any time, so as to have no motion endways. 15 is a winch or handle, which is fitted on the collar 13, and is prevented from turning on the collar by a feather which is fixed in a groove on the side of it; the feather also fits in a groove in the inside of the socket of the handle; the adjusting screw 14 also acts against the end of the socket of the handle, and prevents it from coming off; or the handle may be placed on the other end of the long screw, if it be more convenient, the end of which is shewn at fig. 27. All the parts of the slide tool hitherto described are made of cast iron, except the screws, which are made of cast steel. Fig. 15 is a view of the upper side of the carriage of the slide tool, fig. 16 an edge view, fig. 17 a view of the under side, and fig. 18 an end view, which is constructed as follows: 16 is a parallel plate, to the under side of which are screwed two parallel pieces 17 17; the inner edges of those pieces are bevelled, and form an angle of 45° with the plate 16; they are also parallel to each other, and adjusted so as to fit the dove-tail on the upper side of the slide-tool bed 9; in the middle, between the pieces 17 17, and on the other side of the plate 16, the nut 12, in which the long screw works, is fixed by two screws, the heads of which are on the upper side of the plate 16 (see fig. 15); therefore the nut 12 may be disengaged from the plate or carriage without taking the long screw out, and the carriage slid

off the end of the bed 9 and reversed; for, in some cases, the slide-tool bed is required to be turned one-half round. The holes that receive the two screws for fixing the nut 12 to the plate 16 are arranged so as to be opposite each other, whichever way the carriage is placed; the nut is constructed of two pieces, and screwed together by two screws (see fig. 30, which is an end view of the nut 12, fig. 29 a side view, and fig. 28 a view of the upper side), therefore the nut may be adjusted so as to have no loss of time or motion endways on the long screw. On the upper side of the plate or carriage 16 are fixed two dove-tailed slides 18 18; see fig. 16, which is a view of the edge of the plate, and ends of the slides. Fig. 15 is a view of the upper side of the carriage, having one of the slides 18 removed, the under side of which is shewn in fig. 19; *w* is the upper carriage or slider for holding and fixing the tools; fig. 20 is a view of the under side of the carriage *w;* fig. 21 a side view; fig. 22 a view of the left hand end of figs. 20 and 21; and fig. 23 a view of the opposite end.

On the under side of the carriage *w* are screwed two parallel pieces 19 19, the inner edges of which are bevelled to the same angle, and of the same thickness as the dove-tailed slide 18; the carriage *w* is slid upon the slide 18, and adjusted by the set screws in the side of the carriage, so as to be slid backward and forward without any shake or motion sideways; *x* is a screw for moving the carriage *w* to and fro, and also holding it in any required position; the neck and shoulder of the screw *x* is fitted into a hole in the end of the carriage *w*; there is also a collar sunk in the outer end, see figs. 24 and 25, which are views of its edge and face; the collar acts against the other shoulder of the screw *x*, and is

fixed by three screws to the carriage; therefore the collar may be adjusted in case of its wearing, so as to prevent any lateral motion of the shoulder of the screw; there is a long hole between the carriage-plate 16 and the slide 18 for receiving the screw *x*; one end of the hole is screwed, but the other is made wider, so as to clean the screw, see figs. 15 and 19, where one-half of the hole is shewn in each; but one-half of the screwed end of the hole consists of a screwed nut, which is well fitted in a notch formed in the edge of the plate 16 and the end of the slide 18, and secured by two small screws, so that as the screw and nut wear, the loss of time or lateral motion of the screw may be adjusted; on the end of the screw is fitted a winch or handle 20, in a similar manner as the handle 15 before described; there is also a micrometer wheel 21, (fixed on the end of the screw, between the socket of the handle and the end of the carriage *w*,) which is divided into 100 parts; one inch of the screw contains 10 threads or turns, consequently if the micrometer be turned one division, the screw will move the carriage, together with the tool 22 (see fig. 2), the 1000th part of an inch; the collar 13 of the long screw is also divided into 100 parts, and the screw contains 9 turns in an inch. The micrometer 21 is of the greatest importance, not only for adjusting the depth of the cut of the tool, but for ascertaining the parallelism of the slide-tool-bed 9 with the axis of a cylinder intended to be turned, or that of the face of the chuck *v*, when the slide tool is set to turn a surface; the edge of the upper flanch of the cylinder 8 is divided into 360, and a nonius or vernier on the edge of the flanch of the slide-tool-bed to correspond with it, so that the slide tool may be adjusted very near to the angle required. To adjust the

slide tool to turn a cylinder, slacken the screws 10 10, turn the vernier of the slide tool to zero, the bed will then be at right angles to the base-plate 1, and parallel to the lathe bed, as shewn in fig. 4, Plate X.; but as the radius of the flanch of the cylinder 8 is only 4 inches, it becomes difficult to adjust the slide tool to turn a cylinder two feet long by that adjustment; but the error may be easily corrected: tighten the screws 10 10, turn a little piece opposite the centre screw of the slide-tool-bed (of the cylinder intended to be turned), examine the micrometer 21 on the screw *x*, and mark down the number; turn back the handle of the screw *x*, say five turns, so that the point of the tool will clear any part of the cylinder, screw the carriage 16 to the other end of the slide-tool-bed, by turning the handle 15 of the long screw, then turn a piece at that end of the cylinder of the same diameter as the first, examine the number on the micrometer 21 before the tool is drawn back, and if the number be the same as noted down, the slide tool will be parallel to the axis of the cylinder; if not, slacken the screws 10 10 a little, adjust the micrometer to the number before noted down, turn the slide-tool-bed till the point of the tool 22 just touches that part of the cylinder last turned, then tighten the screws 10 10, and the slide-tool-bed will be parallel to the axis of the cylinder intended to be turned, or to the centres of the lathe. As the slide 18 (on the carriage 16) is fixed at right angles to the slide-tool-bed, consequently the motion of the upper carriage *w* will be also at right angles to that of the lower carriage 16; therefore, when the bed of the slide tool is adjusted to turn a cylinder, by turning the handle of the upper screw *x*, the motion of the carriage *w*, together with the tool, will turn a surface; but if the radius of the surface

be greater than the motion of the carriage *w*, it will be best to turn round the slide-tool-bed 90°, as shewn in figs. 1 and 2, Plate XII., and figs. 1, 2, and 3, Plate X., then the bed of the slide tool will be parallel to the face of the chuck *v*, and at right angles to the lathe bed. The best way of ascertaining the parallelism of the slide-tool-bed with the face of the chuck *v*, is to fix a tool in the carriage *w*, then turn the handle 15 of the long screw till the point of the tool is opposite the centre screw of the slide-tool-bed, screw forward the tool till it just touches the face of the chuck, mark that part of the chuck with chalk, examine the number of the micrometer and mark it down, then draw back the tool a little to clear the face of the chuck, turn the chuck half round, screw forward the tool by turning the handle 15 till the tool has arrived at the chalked part of the chuck, then screw forward the tool with the handle 20 till the point of the tool just touches the chalked part of the chuck, examine the number of the micrometer, and if it be the same as before marked down, the slide tool will be parallel with the face of the chuck; but if the number of the micrometer be not the same, slacken the screws 10 10, adjust the micrometer to the number first marked down, turn the slide-tool-bed till the point of the tool just touches the chalked part of the chuck, tighten the screws 10 10, and the slide tool will be parallel to the face of the chuck; but it would be advisable to repeat the same operation over again. When the slide-tool-bed is placed as above described, the right-hand end of it rests on a bridge 23, (see figs. 9 and 10, Plate XII., which is an end and side view, and a view of the upper side of it is shewn in fig. 2); this bridge is fixed to the base-plate 1 of the slide tool by two screws; the right-hand

end of the slide-tool-bed has a projecting piece in which is a groove concentric with the centre screw of the bed of the slide tool, and through which passes a screw for fixing it to the upper part of the bridge 23; the bridge tends greatly to strengthen and stop the vibration of the slide tool.

Having described the construction of the several parts of the slide tool, we shall now proceed to point out some of its advantages over those that are commonly made. First, the cylinder 8 and the bridge 23 are only for raising the slide tool to a proper height with the centre of the lathe mandril, which is ten inches above the lathe bed; consequently, if they are removed, the bed of the slide tool may be fixed in a similar manner to the upper side of the base-plate 1, then the tool will be only six inches above the lathe bed, and, of course, may be applied to a six-inch lathe; or the slide tool may easily be applied to a lathe of any greater height, by making the cylinder 8 and bridge 23 to correspond. Secondly, the use of the two slides 18 18 is, that the carriage *w* (of the tool) may be removed from one to the other, by which means a greater diameter of surface or length of cylinder may be turned without moving the bed of the slide tool. Thirdly, the circular motion of the slide tool being below the two right-line motions, and always at right angles to each other, consequently the longer screw or motion of the carriage of the slide tool may be applied to turn either a cylinder or a surface, without the two screws for moving the carriages being both brought in the same direction; and it also admits the motion or sliding part of the lower carriage to be higher up, which will, of course, tend to make the tool much steadier. There is also an advantage in the construction of the upper car-

riage *w*, in which the tool is fixed; first, as the slide 18 is screwed to the plate of the lower carriage 16, and the side pieces 19 19 to the upper carriage *w*, consequently the base of the upper carriage *w* is broader than those made in the ordinary way, that is, when the side pieces are fixed to the lower carriage, and the carriage which holds the tool slides between them; in this case the tool must project, out of the carriage in which it is fixed, over the side piece without being supported, and also as much more as the tool is intended to be screwed forward towards the axis of the thing that is to be turned; for the tool and the upper carriage, together with the frame that supports them, are screwed forward altogether, therefore the frame would come in contact with the most prominent part of the thing to be turned, did not the tool project sufficiently out, therefore the tool will be subject to much vibration.

In this improved slide tool, the tool may be fixed in the upper carriage close to either side, and also over one of the side pieces 19, which will of course make a solid support for it; when the tool is bent a little to one side, so as to project past the side of the carriage, then the side of the carriage will clear the face of the thing to be turned; the upper carriage, together with the tool, may be screwed about four inches over the inner side of the lower carriage; therefore, in most cases, the tool need only project a little before that part of the carriage where it is fixed, which will of course support and tend greatly to stop the vibration of the tool; the tool may be fixed across the upper carriage when required, and when in that situation it will be also supported at the very edge of the carriage, for the side pieces 19 19 rest upon the plate of the lower carriage; the tool may also be fixed in

either direction in the square hole in the middle of the carriage by the set screw, as shewn in fig. 2: the several parts of the two carriages are made of gun metal, except the side pieces 19 19, which are of cast iron; therefore, whenever a sliding motion takes place, one part of the metal is of cast iron, and the other of gun metal: the screws are all made of cast steel.

We shall now proceed to describe the manner of communicating the motion of the lathe mandril to the screw of the slide tool: 24 is an arm or bracket (see fig. 3, Plate X. and fig. 2, Plate XI.), which is fixed to the upper side of the frame of the lathe mandril, and projects on each side of it; to one end and on the under side of the arm 24 is screwed a bar or lengthening-piece 25, which is to extend the arm 24, when the radius of the thing to be turned exceeds the distance between the centre of the mandril and the axis 26; 27 is a pillar, the lower end of which passes through a round hole in the end of the piece 25, and is secured by a screwed nut sunk in the under side of it; on the upper end of the pillar 27 are two narrow plummer blocks 28 28 (see fig. 7, Plate XI.); 29 is a hollow cylinder or socket, the ends of which are made a little smaller, and fitted into the holes, and at liberty to turn in the plummer blocks 28 28; on one side of the socket 29 is a projecting piece, in which is made a round hole to receive the end of an axis 30; the other end of the axis is supported, and turns in a hole in the upper end of a sliding piece 31 (see fig. 8, which is a side view of it); in the sliding piece 31 is a long groove, through which pass two screws 32 32, that fix it to the other end of the arm 25; the end of the arm forms a segment of a circle, the centre of which is the centre of the socket 29 and axis 26; 33, 34, 35, and 36, are four

endless screw wheels, made all of one piece, the socket of which is well fitted to the cylindrical axis 30, but may be slid to and fro, so as to bring any of the wheels perpendicular to the axis of the lathe mandril, and fixed upon the axis 30 by a set screw in the right-hand end of the socket (see fig. 2). Therefore, if the screws 32 32 are slackened, the piece 31, together with the axis 30 and its appendages, may be slid up or down, so as to put into geer any of the endless screw wheels with the screw Z which is upon the lathe mandril, and may again be fixed in its required position by the screws 32 32: it will also be observed, that when the end of the axis 30, &c. is slid up or down, that the socket 29, which supports the other end of the axis 30, will turn in the plummer blocks 28 28, consequently the centre of the axis 30 will always be in a direct line with that of the axis 26: one end of the axis 26 is also supported and turns in the socket 29; therefore the bevel wheel 37, which is fixed on the axis 26, and the bevel pinion 38, which is fixed on the axis 30 (by set screws), will always be properly in geer with each other. 39 is a collar which is fixed upon the axis 30 by a set screw; the shoulder of the collar acts against the face of the piece 31, and, of course, prevents any lateral motion of the axis 30; the number of teeth in the bevel wheel 37 is three times that of the pinion 38; as the diameters of the axis 26 and 30 are the same, therefore the situation of the bevel wheel 37 and the pinion 38 may be changed when the speed of the axis 26 is required slower, the axis 30 will then make nine revolutions for one of the axis 26: there is also a pair of bevel wheels of equal numbers of teeth, which may be applied in the place of those before described (see fig. 3, Plate X.); 39 is a bracket or projecting piece, made of cast iron;

which is fixed by screws to the upper side of the base-plate 1 of the slide tool (see fig. 31, which is a view of the upper side of it, detached from the slide tool); 40, 41, 42, 43, 44, and 45, are short pillars, made of gun metal, the lower ends of which pass through round holes, marked with corresponding figures, made in the bracket 39, and are fixed by screwed nuts sunk in the under side of it; 46 is a cylindrical axis which passes through, and is at liberty to turn in holes made in the upper ends of the pillars 40 and 41; there is a shoulder formed on the axis 46, which acts against the inner side of the pillar 40, and on the right-hand end of the axis 46 is formed a pivot, the shoulder of which acts against the inner side of the pillar 41; these shoulders are to prevent any lateral motion of the axis; the centres of the axis 46, and the long screw 11 of the slide tool, are in a direct line, when the slide tool is set to turn a surface; they are also connected together by a coupling box 47, one part of which is fixed in the end of the screw in the place of the handle; the other part of the box is fitted upon the end of the axis 46, and is prevented from turning round upon it by a feather fixed in the side of the axis; that part of the coupling box may be slid to and fro upon the axis 46, so as to put it in or out of geer with the other part of the coupling box by the action of a lever 48; the lever is supported and turns on a stud formed on the upper end of the pillar 43; on the upper end of the pillar 42 is formed a plummer block, in which is supported the other end of the axis 26; the axes 26 and 46 are level, and also at right angles to each other; on the end of the axis 26 is fitted a bevel wheel 49; 50 and 51 are two bevel wheels, which face each other, and are made of one piece; they are fitted upon the axis

46, and are prevented from turning round on it by a feather fixed in the side of the axis; they may also be slid backward or forward, so as to put either of them in geer with the bevel wheel 49; therefore the direction of the motion of the axis 46 may be changed by turning to and fro the handle of a lever 76; the other end of the lever 76 acts between two shoulders formed on the middle part of the socket of the bevel wheels 50 and 51, and is also supported and turns on a stud formed on the upper part of the pillar; the bevel wheels 50 and 51 are at such a distance from each other as to clear the bevel wheel 49 about the eighth part of an inch, that is, when the handle of the lever 76 is placed in the intermediate position, by which means the motion of the axis 46 may be stopped when required, although the axis 26 remains in motion. Having described the method of communicating the circular motion of the lathe mandril to the long screw of the slide tool, we shall now point out the number of revolutions that the mandril will make for one of the long screw of the slide tool, supposing the wheels to be placed as shewn in fig. 2, Plate XI. The endless screw wheel 36 has 37 teeth, the endless screw on the mandril makes one revolution for each tooth of the wheel, the bevel pinion 38 makes three revolutions for one of the bevel wheel 37; $37 \times 3 = 111$ turns of the mandril for one of the long screw; therefore, as the long screw of the slide tool requires nine turns to move the tool one inch, the number of the cuts the tool will make in one inch will be 999, which is the highest number.

The following Table shews the number of turns the mandril will make for one of the long screw of the slide tool; and also the number of cuts made by the tool in one inch of the radius of the surface to be turned, by

changing the situation of the endless screw wheels 33, 34, 35, and 36, the bevel wheel 37, the bevel pinion 38, and the mitre-wheels.

Mitre Wheel, Bevel Wheel 37, or Bevel Pinion 38, fixed on the Axis 30.	Mitre Wheel, Bevel Wheel 37, or Bevel Pinion 38, fixed on the Axis 26.	Number of Teeth in Endless Screw Wheel.	Number of Turns of the Mandril for one of the long Screw of the Slide Tool.	Number of Turns of the Mandril, or Cuts of the Tool in one inch of the Radius of the Surface to be turned, for nine Turns of the long Screw of the Slide Tool.
Pinion 38	Wheel 37	37	111	999
Ditto	Ditto	28	84	756
Ditto	Ditto	21	63	567
Ditto	Ditto	16	48	432
Mitre Wheel	Mitre Wheel	37	37	333
Ditto	Ditto	28	28	252
Ditto	Ditto	21	21	189
Ditto	Ditto	16	16	144
Wheel 37	Pinion 38	37	$12\frac{1}{3}$	111
Ditto	Ditto	28	$9\frac{1}{3}$	84
Ditto	Ditto	21	7	63
Ditto	Ditto	16	$5\frac{1}{3}$	48

We shall now proceed to describe the method of moving the strap I from one end to the other of the cones A and B, by the motion of the lathe mandril, or by turning the long screw of the slide tool by hand. On the upper ends and outer sides of the pillars 40 and 41 are projecting sockets concentric with the axis 46, on

which turns a swing frame *y y* and *z z;* the frame consists of two side pieces, firmly secured at a proper distance from each other by two collar-bolts or cross-bars *z z;* in the lower ends of the side pieces *y y* are made round holes, which receive and are at liberty to turn on the sockets of the pillars 40 and 41; there are also round holes in the upper ends of the swing frame *y y*, in which are supported, and at liberty to turn, the pivots on the ends of the fusee axis *h;* there is a sliding frame or forked rod that keeps the upper end of the swing frame and axis *h* at a proper distance from the axis O O; the sliding frame consists of two pieces 52 and 53; one end of each piece is made to receive the fusees P and Q before described, see figs. 1 and 3, Plate X.; there are round holes made in the ends of the forks, through which passes, and is at liberty to turn, the axis O O in the fork 53, and the axis *h* in the fork 52; the shank of the fork 52 consists of a hollow cylinder, through which passes, and is at liberty to slide to and fro, the shank of the fork 53; it is prevented from sliding out of the cylinder by a pin which passes through a hole made in the cylinder, and also through a hole, about four inches long, made in the end of the shank 53; therefore, the sliding motion of the shank in the cylinder will be limited to four inches: on the middle part of the shank 53 is fitted a collar, which is fixed by a set screw; there is also a spiral spring placed on the shank, one end of which pushes against the shoulder of the collar, and the other against the end of the cylinder 52; the spring tends to extend the length of the sliding frame. In fig. 3, Plate X. part of the shank of the fork 53 is represented broken off, to shew the axis 26, &c. below it, and the end 52 of the fork, fusee, &c. are removed back for the same purpose to fig. 8, but they are

shewn in their places in fig. 1; the use of the expanding frame is to keep a proper tension on the cat-gut band 54; the band is wound twice round each fusee P and Q, and its ends coupled together, by which means motion is communicated from Q to the fusee P; on each of the cross bars of the swing frame *y y* is a boss, through which passes, and is at liberty to turn, an axis 55; there are two shoulders on the axis, which act against the inner sides of the bosses on the bars *z z*, and prevent any lateral motion; on the fusee axis *h* is fixed a face wheel, or a wheel toothed on the face, (see figs. 33 and 34, Plate XII. and figs. 1 and 2, Plate X.) Fig. 33 is a side view of the upper part of the swing frame, and fig. 1 the lower part, the middle being removed to make it come within the limit of the plate; the upper part of the swing frame, fusee, axis, &c. are removed in fig. 2, so as to shew the parts below. Fig. 34 is a view of the face wheel 57 and pinion 56; there are six more concentric rings or toothed wheels, of different diameters, screwed to the face of the arms of the wheel 57, and which contain the following numbers of teeth, 30, 45, 60, 75, 90, 105, and 120; on the upper end of the axis 55 is fitted a spur pinion 56, of 15 teeth, which may be slid up or down the axis, and put in geer with any of the face wheels 57, and also fixed on its axis by a set screw; on the lower end of the axis 55 is fixed a bevel wheel 58, in which works a bevel pinion 59; the wheel is twice the diameter of the pinion; it is fitted on the axis 46, and has a long socket; the end of it is notched, (similar to that of the coupling box 47,) so as to receive the ends of a flat pin that is fixed in the axis; 60 is a lever, which turns on a stud formed on the upper end of the pillar 44; one end of the lever is fitted between two shoulders formed on the socket of the bevel pinion, and

by turning the handle of the lever towards the left hand, the notches in the end of the socket will be withdrawn from the pin, and the axis will then be at liberty to turn within the socket of the bevel pinion; but if the handle of the lever be turned in the contrary direction, the notches in the end of the socket of the pinion will be slid upon the pin, and the bevel pinion will be properly in geer with the bevel wheel; therefore, if the axis 46 be turned round, (either by a motion from the lathe mandril, or by turning the handle of the long screw of the slide tool,) the bevel pinion 59 will turn the bevel wheel 58, and its axis; the pinion 56, on the upper end of the axis, will turn the face wheel 57, together with its axis *h*, and fusee Q; the fusee Q, together with its cat-gut band, will turn the fusee P and its axis O O; and the cylinders *a* and *b*, on the other end of the axis O O, together with their cat-gut bands *d d* and *e e* will draw the carriage M, together with the strap I, from one end of the cones A and B to the other; that is, if the long screw of the slide tool be turned in the direction so as to cause the tool to move from the outer side of the chuck *v* towards the centre of it; and the cones A and B must also be put in motion by turning the handle or winch D, or otherwise; then the carriage M, together with the strap I, will be drawn from the smaller end of the cone B to the larger. But if the long screw of the slide tool be turned in the contrary direction, the tool will move from the centre of the chuck towards the outer side of it, and the carriage M, together with the strap I, will be drawn from the larger end of the cone B to that of the smaller. The use of the seven wheels that are fixed on the arms of the face wheel 57 is for regulating the number of turns that is required of the long screw of the slide tool to move the carriage M, &c. from one end of

the cones A and B to the other, and which must be regulated according to the diameters of the surfaces that are to be turned.

The following Table shews which of the face wheels 57 the pinion 56 must be put in geer with, to turn surfaces of various diameters. Opposite the diameter of the surface to be turned is the number of teeth in the face wheel, in which the pinion must be placed.

No. of Teeth in Face Wheel 57.	Diameter of the Surface to be turned.
30	12 inches and under.
45	12 ditto to 18
60	18 ditto to 24
75	24 ditto to 30
90	30 ditto to 36
105	36 ditto to 42
120	42 ditto to 48

This regulation will be best understood by first comparing the accelerated or retarded motion of the upper cone A, &c. with the uniform motion of the cone B, together with the progression of the carriage M and strap I. Let the length of the cones A and B be divided into three equal parts, as represented by the dotted lines at *a'*, *b'*, *c'*, and *d'*, then the diameter of the cones at each of these places, and also the number of turns that the cone A will make, while the cone B makes 2,828 revolutions, will stand thus:

		Diam.	Turns.		Diam.	Turns.
Cone A	*a'*	35,35 =	1	*b'*	27,73 =	2,05
Cone B		12,5 =	2,828		20,12 =	2,828

	Diam.	Turns.		Diam.	Turns.
c'	20,12 =	3,9	*d'*	12,5 =	8,
	27,73 =	2,828		35,35 =	2,828

Example:—Suppose the lathe is regulated to turn a surface 24 inches diameter, what will be the number of

turns of the long screw of the slide tool, and also the number of inches the tool will have moved, when the strap I arrives at each of the dotted lines b', c', and d', (on the cone A and B,) the strap to commence at the dotted line a', and the tool at the outside of the surface.

This will be best understood by referring to the annexed diagram. Let the largest circle a'' represent the surface to be turned = 12 inches radius; the pinion 56 must be put in geer with the face wheel of 60 teeth, which is four times the diameter of the pinion; the bevel wheel 58 (on the bottom of the vertical axis 55) is double the diameter of the pinion 59; the smaller end of the fusee Q is only one-third of the larger end of the fusee P, and the larger end of the fusee Q is three times that of the smaller end of the fusee P; therefore, if the band be placed on the smaller end of the fusee Q, the velocity of the fusee P will be accelerated (when the tool moves from the outside of the surface towards the centre) nearly in a similar progression as the upper cone A is to the cone B; the fusees Q and P will each make about 11·8 turns to move the strap I from one end of the cones to the other; the number of turns that is required of the long screw of the slide tool to move the strap I from one end of the cones A and B to the other, will stand thus—11·8 × 4 × 2 = 94·4 turns of the long screw; the distance between the circles a'' and d'' is 10·5 inches, which, multiplied by 9, (the number of turns in one inch of the screw,) will make 94·5, which will be equal to the number

of turns required of the long screw of the slide tool to move the strap I from one end of the cones A and B to the other; the distance between the circles a'' and b'' is 6 inches, which is equal to 54 turns of the long screw; 54 turns of the screw will turn the fusee Q nine times round, the nine first turns of the fusee Q will only turn the fusee P four times round; the four turns of the fusee P will move the strap I (on the cones A and B) from the dotted line a' to b', by which means the velocity of the upper cone A, together with the lathe mandril, &c. will be doubled, (that is, supposing the cone B, &c. to have been previously put in motion) the tool will then have arrived at the circle b'', which is only one-half the diameter of the circle a''; but as the velocity of the lathe mandril is doubled, that part of the surface b will be passing the tool at the same velocity as when the tool was at the circle a''; the distance between circles b'' and c'' is three inches, which is equal to 27 turns of the long screw, and by turning the screw 27 times round, the fusee Q will be turned 4·5 times round; the strap I will be moved along the cones from the dotted line b' to c'; the velocity of the upper cone A and the lathe mandril will again be doubled; the tool will have arrived at the circle c'', which is only one-fourth of the diameter of the circle a''; but as the velocity of the mandril is increased four to one, the surface will be passing the tool at the same velocity as at the commencement; the distance between the circles c'' and d'' is only 1·5 inch, which is equal 13·5 turns of the long screw of the slide tool; and by turning the screw 13·5 times round, the fusee Q will be turned 1·68 times, the fusee P will be turned 4 times; the strap I will be moved along the cones from the dotted line c' to d'; the velocity of the upper cone A, together with the lathe mandril, &c.

will be doubled a third time; the tool will have arrived at the circle d'', which is only one-eighth of the diameter of the circle a''; but as the velocity of the lathe mandril, &c. is increased eight to one, the surface will have hitherto passed the tool always at the same velocity; the strap I will have arrived nearly at the end of the cones; the handle of the lever 60 must be turned towards the left hand, then the strap I will remain at the end of the cones till the tool has arrived at the centre of the surface. The chuck v contains four long screws; they are secured in their places by four collars, which act against the shoulder of the screws, and prevent any lateral motion of them; each collar is fixed in its place by two pins; there are four screwed nuts, which are well fitted in long parallel holes or openings made in the chuck, so as to slide to and fro without any shake; the back part of the holes is a little wider than the front; on the back part of the nuts is a flanch which projects on each side of the holes, and also rests against the back part of the chuck; the faces of the nuts are level with the face of the chuck; on the faces of the nuts are fixed, by four screws, flat plates or jaws, the edges of which are toothed like a file; the plates may be fixed across the holes if more convenient; there is also a number of dies or jaws of different shapes, which may be fixed to the nuts when required; the outer ends of the long screws are made square, to which is fitted a key for turning them round; therefore, if the screws are turned round in one direction, the nuts and dies will be forced towards the centre of the chuck, and will gripe or hold any thing that may be placed between them; but if the screws be turned in the contrary direction, the dies or jaws will be drawn towards the outer side of the chuck. This is a very convenient

kind of chuck, for things may be fixed on it either concentric or excentric. There is a variety of other chucks fitted to the lathe, but not shewn in the engravings, which consist of the right and left-handed screw or universal chuck, right angle and bevel chuck, four and eight screwed box chuck, centre chuck, drill chuck, &c. 61 is an index or point, which is applied to the dividing plate on the face of the wheel W.

Fig. 5, Plate XI., is a vertical section of the index point, and fig. 6 a side view; they are drawn to double the size, as shewn in fig. 2. The index points that are commonly applied to dividing plates are fixed to the end of a spring and at right angles to it, the point commonly projects before the spring an inch, or an inch and a half, and when the point is placed in one of the holes in the dividing plate, a little strain or motion to turn the plate will cause the spring to bend in the middle, and will of course hold the dividing plate very imperfectly.

The index plate, as shewn in Plate XI., see fig. 5, consists of a small cylinder made to slide in a socket; there is a spiral spring placed on the middle part of the cylinder; one end of the spring acts against a shoulder in the socket, and the other against a shoulder on the cylinder, which pushes the point into one of the holes in the dividing plate; the point is withdrawn from the plate by the action of a lever; the socket is fixed in a hole made in the upper end of a piece of iron 62, which is about two inches by one, and which is strong enough to resist any strain that may be applied to the dividing plate without bending it; in the lower end of the piece 62 is a parallel hole, through which passes a screwed bolt 63. 64 is a bracket which is fixed to the side of the mandril frame by two screws; the head and neck

of the bolt 63 is round, and well fitted in a hole made in the bracket 64; the middle part of the bolt 63 is made square, and fitted to the hole in the piece 62, so as to slide to and fro without any shake; there is also a washer fitted on the square part of the bolt, and against which acts the screwed nut 65. The piece 62, together with the bolts 63, &c. may be turned to and fro, so as to adjust the point 61 to any of the circles of holes on the dividing plate, and may be fixed in that position by the nut 65. There is also a tangent screw 66, the neck of which is fitted into a round hole made up the lower end of the piece 62, and is secured from any lateral motion by a pin which passes through a hole made in the piece 62, and also through a groove made in the neck of the screw 66; the screw also passes through a screwed hole in the square part of the bolt 63. There is a micrometer wheel fixed to the head of the screw 66, which is divided into 100 parts; the edge of the piece 62 (opposite the washer) is divided so as to point out each turn of the screw 66; therefore, the distance between any of the holes in the dividing plate may easily be subdivided, by first ascertaining the number of turns of the screw, and also the parts of a turn on the micrometer, and divide them by the number of divisions required between the holes of the dividing plate.

Fig. 1 *b*, Plate XI., is a section of the centre or poppet-head. Fig. 4 is a view of the centre end of the head; there is a cylindrical hole made through the upper part of the centre-head, into which is fitted a steel cylinder 70; in the right-hand end of the centre-head (see fig. 1 *b*) is sunk a hard steel collar, and driven in so tight as to prevent it from turning round; there is a round hole in the middle of the collar, in which is fitted the

neck of a long screw 67. 68 is a gun-metal cap, which is screwed on the right-hand end of the centre-head; there is a round hole made in the middle of the cap, in which is fitted the outer end or neck of the screw 67; there is also a boss or shoulder on the screw, one end of which acts against the face of the collar, and the other against the inside of the cap 68; the cap may be screwed up so as to prevent any lateral motion of the screw 67: on the outer end of the screw is fitted a handle or winch 69; there is also a round hole made through the middle of the cylinder 70; the middle part of the hole is a little more in diameter than the outside of the thread of the screw 67; the hole in the right-hand end of the cylinder 70 is made smaller, and screwed so as to fit the screw 67; 71 is a large centre chuck, which is screwed into the left-hand end of the cylinder 70. Fig. 10 is also a centre chuck, into which are fitted smaller centres; there is a hole made a little conical through the middle of the chuck, into which is fitted one end of the centre, and, if driven lightly in, will prevent it from turning round: centres made in this way may be easily renewed or changed for a hollow centre.

Figs. 11 and 9 are two chucks, which may also be screwed into the end of the cylinder 70, the faces of which are for placing or holding any thing against to be drilled; 72 is a set screw, which is screwed through a hole made in the upper part of the centre-head; the lower part of the hole is made wider, to receive a piece of gun-metal which is fitted into it; the under side of the piece of gun-metal is fitted to the cylinder 70, and the end of the set screw 72 acts against the upper side of it. The piece of gun-metal is to prevent the screws from injuring the cylinder; the use of the set screw is to fix

the cylinder in any required position. There is a square groove made along the under-side of the cylinder 70; 73 is a pin which is driven into a hole made in the centre-head; the upper end of the pin 73 is made flat, and is fitted and also projects into the groove on the lower side of the cylinder; the pin is to prevent the cylinder from turning round; therefore, if the handle 69 of the screw be turned in one direction, the cylinder 70 will be forced out of the head, and if the handle of the screw be turned in the contrary direction, the cylinder will be withdrawn into the head, as shewn at fig. 1 *b;* 74 and 75 are screws and washers for fixing the centre and mandril-heads to the bed of the lathe.

No. XIII.

LEVER CRAMP.

The SILVER ISIS MEDAL *was presented to Mr.* ANDREW SMITH, *2, Palace Street, Pimlico, for his Lever Cramp; a Model of which has been placed in the Society's Repository.*

THE object of the lever cramp is to furnish a powerful pressure, easy and convenient of application, for the purpose of bringing successively the boards employed in flooring rooms in close contact with each other previous to nailing them down. Several methods have heretofore been in use, which are either deficient in power, or cannot be applied without injuring the joists. Mr. Smith's

instrument avoids both these objections; and the construction of it will be understood from the following description:—

Fig. 1, *a a a a a*, Plate VIII., part of the joists on which the floor-board *b* is nailed; against this the board *c* is to be pressed quite close, ready for nailing; for this purpose a clamp-board *d*, extending over five joists, is laid behind it; the cramp is then brought to the middle joist; its body *e* is a strong clamp, taking tight hold of the joist by means of a wedge; this forms the fulcrum from which the lever presses up the board.

Fig. 2, a back view; (this, with the parts, figs. 3, 4, 5, 6, and 7, are one-fifth the real size.) In fig. 2, though shewn in action, the wedge is removed, the better to shew its place; the side *f* has short teeth within, to stick in the joist and prevent slipping; the side *g*, where the wedge goes, has a movable plate *h* within it, held by two pins *i i*, sliding in holes in the side *g*; there is a small recess within this side, and also in the plate *h*, to receive the wedge which is driven between them, and guide it parallel to the joists, which is then firmly held between the plate *h* and side *f*; *k k*, two screws which hold the forked lever *l l* to the clamp *e*; the forks of the lever pass through poles *m m* in the sliding frame or cramp *n*, shewn separate in figs. 3 and 5, and as sliding out in the side view fig. 4; there are two recesses *o o* in the sides of the clamp *e* for this to slide in. The top and side views, figs. 8 and 9, one-tenth the size, shew the action; *j*, the wedge which fixes the clamp to the joist. The lever *l*, when thrown back as in fig. 9, draws in the frame *m*; in this position the clamp *e* is fixed to the joist; the lever is prevented from falling farther, so as to wrench off the clamp, by the prop *p*, which does not open farther than shewn, there

being a stop above the joint at *q;* on raising the lever towards the position shewn by dotted lines, the cramp-plate or frame *n* is forced out, and urges before it the cramp-board *d;* this board is purposely made concave on the side which presses the floor-board *c*, and the lever has to bring it straight so as to touch all along over the five joists, by which the board *c* is equally pressed at those places and may be nailed down; and if the error of the board *d* is greater than what occurs in floor-boards, it will overcome them and press them quite close together. The prop *p* follows the lever, and retains it in the position to which it has been brought in strong action against the boards; the foot *r* of the prop *p* is spread out with teeth, to bear well on the joist.

Figs. 10, 11, and 12, shew a different form of cramp. *e e* fig. 10, the clamp which is fixed to the joist by a screw *s;* the movable plate *h* hangs on the screw so as to go and come with it; *t*, the aperture through which the bar *u u* of the cramp-plate *n* slides; figs. 13 and 14 shew an under and back view of the bar and plate *u n* separate; the lever *l* passes through the aperture *m* in the bar; *v*, a gap in which the lever is held by the screw *k*.

Fig. 11. A top view of the clamp, one-tenth the size, the others being a fifth, the lever *l* and plate *n* being removed. Fig. 12, a section; *w w*, the short teeth within the clamp; the aperture *t*, and bar *u*, are made thicker at the front towards *n;* in the first case the fulcrum *k* is below the joist, and the pressure level with the boards; in this case the fulcrum *k* is above the joists, level with the boards, and the pressure above, but in both cases the lever is so curved as to present its pressure towards the cramp-board *d* in all its positions. The upper portion of the lever, with its prop, is the same as fig. 9.

CERTIFICATES.

SIR, *Belgrave Place, Pimlico, May* 1, 1828.

I have seen Mr. Smith's portable lever cramp, and have proved it to be a very useful and powerful instrument; so much so, that I shall request it to be used in all my works. It may be used in many other ways besides flooring. I certainly am much pleased with it.

I am, Sir, &c. &c.

A. AIKIN, Esq. H. WARREN.
Secretary, &c. &c.

SIR,

I have seen Mr. Smith's portable lever cramp, and have no hesitation in saying, that it is a most powerful instrument, and will not only effectually answer the intended purpose of forcing flooring-boards together while in the act of laying them, but may also be employed for every purpose that a cramp can be used, in doors, shutters, &c., and even in cases where this latter instrument cannot be used.

I am, Sir, &c. &c.

A. AIKIN, Esq. PETER NICHOLSON.
Secretary, &c. &c.

An experiment was made, at the desire of the Committee, by Mr. Smart, of which the following is an account:—Three flooring boards, two inches thick and eleven and a half inches wide, were at once brought up by the instrument as tight as could have been done by

wedges applied between dogs in the usual way, and of course without wounding the joists. In order more completely to ascertain the comparative power of the two methods, bearers, ten feet apart, were placed on the side of a plank that had been nailed down; and on applying another plank, it was found to be kept an inch apart from the former by the interposition of the bearers. Mr. Smith's instrument was then made to act on the edge of the plank midway between the bearers, and forced that part in contact with the other plank. The dogs and wedges were then made trial of, but were not capable of exerting so strong a pressure as the lever cramp. Mr. Smart considers it to be a very powerful, useful, and commodious instrument.

No. XIV.

CARRIAGE FOR MR. PALMER'S RAILWAY.

The SILVER ISIS MEDAL *and* FIVE POUNDS *were presented to Mr.* T. CHAPMAN, 4, *Royal Row, Lambeth, for his Carriage for Mr.* PALMER'S *Patent Railway; a Model of which has been placed in the Society's Repository.*

SIR, 4, *Royal Row, Lambeth, Feb.* 11, 1828.

I BEG leave to offer to the Society for the Encouragement of Arts, a model of an improvement on Mr. Palmer's carriage and railway, by which the difficulty of turning an angle, and the loss of time necessary to accomplish

that object in Mr. Palmer's carriage, is entirely obviated. I shall be happy to attend the exhibition of the model, whenever you may think proper to bring the subject before the Committee.

I am, Sir, &c. &c.

A. Aikin, Esq.
Secretary, &c. &c.

Thomas Chapman.

Mr. Palmer's railway is a single rail, elevated sufficiently above the ground to allow of two boxes being suspended, one on each side of the rail and near to it, from two wheels one behind the other on the rail, and, when making a turn, a portion of the rail turns with the carriage on it.

Mr. Chapman's contrivance is to make the carriage move from one angle on to another, or along a curved rail as well as a straight one.

Plate IX. Fig. 8, is an end view; fig. 9 a side view, partly in section; fig. 10 a top view, smaller; *a a*, the rail; *b b*, two wheels on the rail; these carry the turning-plates *c c*, each having four friction-rollers; *d d*, the carriage plates lying on the friction-rollers; *e e*, upper plates; *f f*, the vertical axis of the wheel frames or turn-plates *c c;* they pass through the plates *d* and *e*, from which the boxes *g g* are suspended by the lateral arms *h h* and *i i*. Now, as the wheels and frames *b c* can turn freely on their axis *f f*, they each require four guiding rollers *j j j j*, to keep them in a right line with the rail, and to cause them to turn as the rail turns. Fig. 10 shews the carriage on a curved portion of rail; these carriages should not be farther asunder than is absolutely necessary for the required

curve of the rail, it being a great advantage in Mr. Palmer's carriage that the boxes are so close to the rail, and so little top-heavy, that a considerable inequality of weight produces very little disturbance of the equilibrium. The bottom of the carriage has a joint at one-third of its length, and is held up at this by the hooks *k k;* by removing these, the contents may be let out: the fixed portion of bottom is made sloping, so that it may be readily emptied.

No. XV.

COCK FOR BOTTLING WINE.

The LARGE SILVER MEDAL *was presented to Mr. J.* CASTELL, 24, *Dartmouth Street, for his Duplex Cock for Bottling Wine; a Model of which has been placed in the Society's Repository.*

24, *Dartmouth Street, Westminster,*
SIR, *6th March,* 1828.

I DO myself the honour of sending, for the inspection of the Society of Arts, one of my duplex bottling cocks. I have now had ten years' practice in the bottling trade, and have discovered that the ordinary mode of operation is attended with not only a great loss of liquor and waste of time, but also with considerable manual labour. My chief study, in the construction of this cock, has been to obviate these difficulties, in which I have been successful. Having satisfied myself of its efficacy, the first person I

shewed it to was my employer, Lytton George Kier, Esq., who expressed himself highly satisfied with my invention, and desired it to be used generally in his cellar. I next introduced it to Messrs. Bellamy, Smith, and Bellamy, who immediately ordered it to be used in their cellar; and I had the satisfaction of hearing from their men, that after a few minutes' practice, they could use them without spilling a single drop of wine, and with great ease to themselves, which can also be attested by others of the trade. Should you, Sir, think it worthy the attention of the Society, I shall feel gratified in attending to explain its construction, whenever they may think proper to command.

I am, Sir, &c. &c.

A. Aikin, Esq.
Secretary, &c. &c.

John Castell.

Reference to the Engraving.

Figs. 12 and 13, Plate VII. are a side and front view of the apparatus; *a* is the common cock; *b* is a pipe connected with it by an union-joint *c; d d* are lateral pipes springing from the boss *e*, which screws on to the pipe *b;* the ends of the lateral pipes are cock plugs, on which the barrels *f f* turn, and from which the entering pipes *g g* project; *h h* are stops limiting the motion of the barrels. Each of the entering pipes may therefore be considered as at the same time the lever, handle, and spout of a cock, which opens when the lever is depressed, and closes when the lever is raised.

These lever handles being first both of them raised, an empty bottle is inverted over one of them, and is immediately brought down. The lever being thus depressed, the

cock is opened, and the wine flows through it into the bottle. When the bottle is half full, an empty bottle is applied to the other lever handle as above described. When this latter bottle is half filled, the first will be full: its pipe is then to be closed, by placing the finger over it; and on raising the pipe or lever, all farther discharge of the wine is stopped. The full bottle being then removed, is to be replaced by an empty one. Thus, a considerable saving of time is effected, and the lees of the wine are less liable to be disturbed than by the use of the common cock; for, in the latter case, there is a sudden alternation of flow and complete stoppage; whereas, in the former case, there is a perpetual though not uniform flow.

CERTIFICATE.

Bridge Street, Westminster,
26th March, 1828.

SIR,

Mr. John Castell, who has presented for the inspection of the Society of Arts a duplex bottling cock, has been in my service upwards of ten years, during which time he has had considerable practice in bottling off wines and spirits.

The bottling cock offered to your notice I have seen in frequent use: it not only saves time, but a waste of wine, which invariably takes place in the cellar tub, by the cocks now used in the usual method. I have desired this invention of Mr. Castell's to be used in my vaults.

I am, Sir, &c. &c.

LYTTON GEO. KIER.

A. AIKIN, Esq.
Secretary, &c. &c.

No. XVI.

SAFE LOCK.

The SILVER ISIS MEDAL *was presented to Mr. T. E.* BONNER, 38, *Tabernacle Walk, Finsbury, for a Safe Lock; a Model of which has been placed in the Society's Repository.*

SIR, *London, April* 7, 1828.

KNOWING it to be the wish of the Society of Arts to reward merit where it is due, and believing them to be competent judges, I offer for their consideration a lock, on a new principle and of the greatest safety, as I believe it is impossible to pick or open it with any thing but its own key. It is extremely simple, being without the least complication, and perfectly safe, as will be perceived on examination. The key should be held inclining forward when put into the key-hole, then pressed to the bottom before turned. It will be found, that should any means be used to force it, they will be of no avail, as it is the key alone that acts upon the lock, and not the follower; but should they be successful in moving the follower, when the instrument touches the ward, it must throw the follower forward in the form of a bolt, and so lock the main bolt in such a manner as not to be moved by them: the true key will, however, put the parts right again, if, after passing the ward, it is lifted about the thirty-second part of an inch, and turned backwards till the bolt is unlocked.

This lock may be adapted to any purpose, either book-

case, money-chest, drawer, desk, cupboard, or door, and may be rendered considerably lower in price than many patent locks of the present day.

I am, Sir, &c. &c.

A. Aikin, Esq.
Secretary, &c. &c.

T. E. Bonner.

Reference to the Engraving. Plate IX.

The chief novelty of this lock consists in introducing a barrel which turns with the key, and keeps the hole shut up, all but the thickness of the key-pipe, and also a secret bolt, that is very likely to be moved, so as to secure the main bolt, by any thing introduced to pick the lock. In fig. 1 the upper plate *a a* fig. 3 is removed, and the bolt *b b* is withdrawn; in fig. 2 the barrel *c* is also removed, and the bolt is shot forward; fig. 3 is a section; fig. 4 the key; fig. 5 a section of the key-hole from *d* to *d* in fig. 6, which is a top view of the cap or plate *a a; c* is the top of the barrel, and *e* its bottom-plate; this is perforated at *f*, to let the nib *g* of the key pass through the top *c;* is also notched at *h* for the key to pass; there is also a notch *i* in the plate *e*, for the detent spring *j* to catch in. The key-hole *d* is shorter than the key, and has a pipe *k*, on which the barrel turns; *l* the bottom pivot of the barrel, which passes through the lower plate *m m* of the lock. When the key is taken out, the detent *j* catches in the notch *i*, and leaves the gap *h* and perforation *f* coincident with the key-hole. When the key is introduced, its nib acts on the slope *n*, fig. 2 of the detent catch *j*, and pushes it back as in fig. 1; the key can then

carry round the barrel, and when arrived at the place shewn in fig. 1, a false key would be liable to move the nib *o* of the safety bolt, and push its pin *p* behind the stop *q* of the bolt *b b*, (which is dotted as shot out,) and prevent its being moved; the nib *g* of the proper key is fitted to pass under this projection *o*, without touching it in its way to move the tumbler *r* and liberate the bolt, while the shorter part *s* of the key moves it back; fig. 7 is a partial section of the cap plate *a a* and barrel *c c*, with the key in it. A straight pin can move the detent *j* and liberate the barrel, and a slightly hooked pin may move it round when opposite the place where the motion of the tumbler begins; the pipe *k* and centre-pin forbid any thing to be introduced that is crooked enough to reach the tumbler; or should any flexible or springy wire reach the tumbler, the false notch *t* in the bolt would receive it, and equally detain the bolt; besides, any bent piece that could move the bolt must be put in at the key-hole before the barrel is moved, and must go round with it, and render it more difficult, if not impossible, for the other springing piece to enter and grope for the tumbler, there being no other outlet in the barrel than that which would be occupied by the substitute for *s*. Again: if we suppose a thin slip of iron bent to a similar outline with the key to be used, it would be liable to move the safety bolt *o p*; and being of necessity as thin as the key pipe, it would yield or spring away, rather than move the tumbler and bolt.

No. XVII.

SPOON FOR ADMINISTERING MEDICINE.

The SILVER ISIS MEDAL *was presented to Mr. G.* GIBSON, 71, *Bishopsgate Street, for a Spoon for administering Medicine, which has been placed in the Society's Repository.*

IN administering medicine in an open spoon to fractious children or to insane persons, part of it is often lost from the struggles of the patient. To remedy this inconvenience, and thus to bring the quantity of medicine given to greater certainty, Mr. Gibson has invented a covered spoon, represented in fig. 12, Plate I.

The bowl of the spoon is covered, except just at the extremity *w*, where there is an orifice for the discharge of the fluid; in the cover is a flap *t*, with a hinge, which is opened in order to pour in the medicine; the handle *v* is round and perforated, opening externally, and also into the bowl. In order to use it, the medicine is to be poured into the bowl, and the spoon is so to be held in the hand that the thumb may cover the hole at the end of the handle, and two of the fingers may press against the disk *u*, so as to have a firmer hold; the spoon is then to be thrust sufficiently far into the patient's mouth, the thumb is to be withdrawn, and the pressure of the air will immediately force the medicine out of the spoon into the patient's throat.

No. XVIII.

OBSTETRICAL INSTRUMENTS.

The LARGE GOLD MEDAL *of the Society was presented to J. P.* HOLMES, *Esq. Surgeon,* 21, *Old Fish Street, Doctors' Commons, for his improved Obstetrical Instruments.*

21, *Old Fish Street,*
April 5, 1828.

THE necessity that existed for simplifying the numerous instruments that were in use among obstetric practitioners, struck me forcibly twenty-three years since, when I was in practice abroad. During the time I have followed my profession in London, I have very anxiously pursued this subject; I have tried many expensive experiments, and have sedulously employed myself in discovering the deficiencies of the old instruments. In this investigation I have made use of the suggestion of a numerous class of professional friends, who have candidly stated the difficulties they had personally experienced in the use of the same. It is now some time since I have finished my improvements; and having had the satisfaction of using my instruments with much success in my own practice, and of having the most favourable accounts of them from my friends, I have laid them before the Society.

I shall now proceed to describe, in a brief manner, the improvements I have effected in each instrument.

The first instrument I offer is a pair of forceps. For-

ceps are instruments made to embrace the head of the child just as a man's hand would do; and they are only substituted for these because there is never room for the introduction of so thick a substance as the hand by the side of the head, and because they cannot lay hold with sufficient firmness. It follows, then, as a main principle in the construction of forceps, that the part that represents the hand should be made as thin as possible compatible with strength; secondly, that they should take a firm hold. Now, the second indication, I am free to confess, almost all the forceps in present use fulfil: they lay hold firm enough; but, as to the first point, they are all thicker than they need be; they consequently encroach on that cavity which is already too small for the passage of the child. In my instruments I have been enabled, by diminishing the fenestra, to render the blades much thinner than ordinary, and thus have gained one great desideratum. But then there is another point. In all the common forceps hitherto used, it has been assumed, that the child's head being of a globular form, the blades of the instrument must be curved not only in the direction of their axis, but from side to side. Now, I deny this assumption. A child's head out of the body is globular; but when passing the pelvis, and still more when it is under the pressure of forceps, the head is so flattened that its rotundity is nothing. Hence (and this is the fact) the bevelled edges press into the child's head; and by pulling down, that is, extracting, the scalp is sometimes excoriated, but always more or less marked.

There are cases in which no common forceps can be safely or effectually applied—cases where we are obliged to perforate the head of the child, destroy the brain, and remove the child. For these purposes two instruments

have been in use; one a perforator, and one to draw down the deceased child, either entire or in fragments. The perforator in common use is a very dangerous instrument; for it is sharp-pointed and cutting both ways; and hence, if care be not taken to guard it in its passage to the child's head, or if it should slip when arrived there, it cuts the soft parts of the mother, and most probably destroys her. The following are the specific objections to this instrument, as commonly made:—First, its perforating point is curved, which is about as sensible an arrangement as if, previously to driving a nail into a board, we were to turn its point round; secondly, the point is formed of the two blades united; but as no instrument can be made so true but that its points may bend, or its joints, these two points are never really together; thirdly, when these instruments have been introduced, they have to be opened in order to make an incision. And how are they opened? In the same way as a pair of scissors, the most feeble and ineffectual; the consequence of which is, that, as our power is feeble, we must always be violent. Great exertion is required to open the blades; one slips out, and, perhance, cuts the woman. Now, these inconveniences I have thus obviated. I have straightened the point of the instruments, because it will thus perforate easily without much force, and to a certainty without slipping. I have made my point on one blade only, that it may always remain fit for use. By turning the handles across, I have subjected them to that firm, steady, and manageable power of grasping which the hand possesses, instead of leaving them to be worked by the feeble and tottering movement of the thumb and fingers.

The instrument, which is used to withdraw the child

after the head has been perforated, consists of a pair of blades, one of which is inserted into the child's head, whilst the other is on its sides; and one of these is furnished with sharp teeth, shutting into holes in the other. These instruments were a great improvement on the old blunt hook; but they were apt to slip from their hold, partly on account of the smallness of the teeth, and partly on account of the length of the blades and shortness of the handles, by which their leverage was much weakened.

Dr. Conquest endeavoured to obviate this inconvenience by uniting the handles; but, in so doing, he united them by a hinge that, without extraordinary care, may cut and nip the soft parts of the mother, producing great pain and danger. Moreover, he diminished the teeth, already too small to perforate the bone, and consequently, his forceps continually slipped away with portions of the scalp, leaving the bone bare.

I have united the blades by a joint that will not admit the smallest particle of matter to get into its interstices. I have enlarged the teeth so that they will perfectly transfix and retain hold on the firmest bow, and I have effectually guarded them from any contact with the soft parts of the mother. My instrument is also more massive than those in use, because I consider the strength of the instrument enables us to use our power more gently and effectually. There appears to be no greater error than to fancy that, with weak and flexible instruments, we avoid using great force: they slip, yield, and though we may exert no power, we are sure to exert violence. Now, such an instrument as I have invented allows us to abstain from using great muscular exertion to keep it closed; and very slight drawing downwards enables us to use much force; our efforts may be perfectly regulated; we

are sure to make our traction in a right direction: in a word, we have a full command of our operation.

These instruments are available in all cases where it is decided upon to extract the child dead. If there is such a diminution of the pelvis only, that the body will pass when the head is evacuated of the brain, they will bring forth entire. If the cavity be so small that this cannot take place, they will break down the body into small portions, and remove it piecemeal. If there occur cases where the smallness of the pelvis will not admit these instruments to be applied, I am bold to say no instruments hitherto invented can be used. We must then have recourse to that terrible alternative — the Cæsarian operation. Such cases, however, though they are on record, probably may not occur again for centuries—perhaps never: for the instrument I am now about to introduce will, if used in time, prevent the necessity of this cruel operation.

It has long been established by enlightened practitioners, that when a woman is so deformed that she cannot bear a child without the Cæsarian section, and she is discovered to be pregnant, abortion should be brought on. This is to be effected by puncturing the membranes that contain the child. Now, the instrument in use is a common stilet; but the operation is so difficult, that it is very rash to use a bare-pointed instrument in performing it. The mouth of the uterus is not easily discovered, and when it is discovered, is so far closed that it is difficult to avoid wounding its lips; and, while we are examining with the finger, be it remembered, this pointed stilet is left unguarded. I have obviated this difficulty, simply by turning the stilet into a trocar. I pass a canula, perfectly smooth and innocuous, into the vagina; find the

mouth of the uterus with my finger; introduce it into that opening; and now I know I am safe. I press a bolt, which drives a trocar out of the end of the canula, penetrates the membranes, and retracts itself the instant my finger is withdrawn. The liquor amnii follows, and labour ensues.

This instrument may also be advantageously applied to puncture the membranes in ordinary cases of labour, when they are very firm and unyielding.

I am, Sir, &c. &c.

A. Aikin, Esq.
Secretary, &c. &c.

John Pocock Holmes.

Reference to the Engraving, Plate I.

Fig. 1 represents a perforator for opening the head when too large for delivery. While in the act of perforating the hand is placed between the handles *a b*, and grasps the portions *c d*, by which the handles *a b* are kept distended: this keeps the ends *e* and *f* closed together, forming a sharp spear-pointed perforator; the end *e* only is formed into a sharp point, the other *f* fitting in so as to complete the two cutting edges; the top of *f* is notched, as shewn in the separated blades, fig. 11, to fit the angle at *e;* it is thereby kept from springing or straining the joint while using it as a drill; then, when by frequent turning it has pierced the cranium, and entered to the shoulders *g g*, the handles *a b* are closed, as shewn by dotted lines: this action opens the perforating points *e* and *f*, as shewn by dotted lines, their sharp edges making incisions on each side of the perforation; it then is grasped again at *c d*, to close the points, which then

are to be thrust through the opening, and after breaking down the contents, it is withdrawn. The craniotomy forceps, fig. 2, is then to be introduced, while closed, till the point of the concave blade *h* reaches the perforation: it is purposely made longest, that it may slide over the outside, while the convex blade *i* begins to open and enter the perforation: this blade *i* is furnished with three chisel-shaped teeth *jjj*; they enter, while closed, three corresponding holes *kkk* in the opposite blade. They are better seen in fig. 3, which shews the inner faces of the blades *h* and *i*; smaller pointed teeth are also fixed in the blade *h*, with small corresponding holes in the blade *i*; these secure the external integuments, while the three chisel-like teeth pass through the bone of the head, and enter the perforations in the blade *h*, thus giving a very secure hold, and the head may be extracted without any danger of its slipping away; the joints of these forceps are turned and halved into each other, so that they form a round mass, and therefore, in opening or closing, cannot pinch or injure the soft parts near them. Fig. 4 represents a pair of bow-forceps; fig. 5 an outside view of one of the blades separate: these are used for aiding a delivery without injury to mother or child, where the natural power is not sufficient. Fig. 6 represents a perforating stilet, for the purpose of avoiding the use of the perforator fig. 1, and forceps fig. 2, in cases of known deformity: it consists of a long hollow tube and handle, slightly curved at the end *l*; within this slides a jointed stilet, shewn separate in fig. 7; a spiral spring *m* is placed at the lower end, which, acting against a shoulder within the handle, keeps the stilet down safe within its sheath: *n* and *o* are the two joints which allow it to slide in the curve at *l*; a slit is made in the tube at *p*, fig. 8, in which

traverses the screw *q*, which is fixed in the stilet: this both keeps it in the tube, and limits the motion: a button *r* at the bottom serves to press up the stilet, and protrudes its sharp point *s*, to make a puncture; then, on removing the thumb, the spring *m* immediately draws it within the sheath. Fig. 9 is an end view of the perforating points of fig. 1; and fig. 10 a section of the blade, fig. 5.

CERTIFICATES.

2, Guilford Street, Russell Square,
April 24, 1827.

SIR,

I have examined with much care the instruments which you have invented, and am decidedly of opinion that they are far superior to those in ordinary use. Your alterations in the perforator have contributed to make that instrument much more effectual, safer, and of easier application, than it has been heretofore. Your improvements in the other instruments will, I have no doubt, be allowed by every body practically acquainted with the subject of midwifery, to be highly important. The simple inspection of these instruments must convince any practical accoucheur of their safety and utility; but I am happy in being able to add the results of experience to the deductions of theory. I have used the perforator and craniotomy forceps on *two* occasions, with a degree of success that very much gratified me. Your common forceps I have applied *once*, and am perfectly convinced that they are the best instruments of the kind (numerous as the varieties of common forceps are) that have been invented.

I am, &c. &c.

GEO. SHIPMAN,
Lecturer on Midwifery at the School of Anatomy, Hatton Garden.

SIR, 8, *Hatton Garden, April* 12, 1827.

I have much pleasure in expressing the favourable opinion I entertain of your improvements in obstetrical instruments. In the *perforator*, especially, you appear to me to have shewn us that you possess two important qualifications which are rarely united — great mechanical ingenuity in the construction of the instrument, and a minute practical acquaintance with all the anatomical and physiological details of the parts that are the subjects of obstetrical operation.

I am, &c. &c.

J. P. HOLMES, Esq. F. G. JONES.

SIR, 3, *Nottingham Place, March* 5, 1828.

The obstetric craniotomy forceps and perforator which you requested me to use, answered quite to my satisfaction, and were far superior to those which I possessed, invented by Dr. D. Davis. Your perforator being straight, having *one point* only, and the dividing edges opening upon a different principle to other perforators, give it a decided superiority.

I have much pleasure in stating, also, that the forceps retain their hold much better than any which I have used formerly.

I am, &c. &c.

J. P. HOLMES. Esq. J. CHOLMONDELY.

SIR, *St. Saviour's, Southwark, March* 6, 1828.

Your obstetric instruments, consisting of the craniotomy forceps, the perforator, the perforating stilet, and the bow-forceps, I have inspected, and consider the

instruments to be simple, effectual, and, in prudent hands, safe.

The craniotomy forceps I have had occasion to use; and though they are large and heavy, my opinion is, that they constitute one of the best instruments for their purpose which has yet fallen under my notice.

I am, Sir, &c. &c.

J. P. Holmes, Esq. James Blundell.

PAPERS

IN

MANUFACTURES.

No. I.

SHEET CORK.

The SILVER ISIS MEDAL *was presented to Mr.* R. LLOYD, 71, *Strand, for his Sheet Cork; Samples of which have been placed in the Society's Repository.*

THE only use to which sheet cork has hitherto been applied by Mr. Lloyd is in his business, which is that of a hat manufacturer, for the purpose of giving to hats their requisite shape and stiffness. There are, however, several other uses to which cork is applied, such as for the internal sole of shoes, and for lining the drawers and boxes of entomological cabinets. For these, and other similar purposes, Mr. Lloyd's sheet cork, which is very compact, even, and may be had almost of any thickness, down to the thirty-second of an inch, is excellently adapted.

The cork, in its raw state, is first brought to a smooth surface by shaving and rasping; it then is pressed be-

tween hot plates; and, finally, is subjected to the action of a strong press for a day or two. By this process the cork becomes more compact and even, and is then ready to be split. The instrument employed for this latter purpose is similar to that used for splitting skins, with the addition of a flat carriage, by which the cork is brought under the action of the knife.

No. II.

SHAWL OF ENGLISH CASHMEER WOOL.

The Large GOLD MEDAL *was presented to C. T.* TOWER, *Esq., of Weald Hall, Essex, for a Shawl made of English Cashmeer Wool.*

SEVERAL unsuccessful attempts have been made to introduce and to naturalise, in the British islands, the shawl-goat of Cashmeer, that variety of the common goat, or perhaps a peculiar species, the down of which is the material of the so called India shawls.

These fabrics, in fineness of fibre, lightness, and warmth, are unrivalled by those of any other material. It has, therefore, been considered, both in France and England, a very desirable object to introduce the shawl-goat, for the purpose of ascertaining whether the climate of Europe is suitable to it, and whether, under these circumstances, the fine down given it by nature as a pro-

tection against the winter cold of its own country, will be produced unimpaired in the fineness of its staple.

A few years ago some shawl-goats were introduced into Scotland; but the experiment did not succeed, as they died without leaving any progeny.

From France two agents were sent to Persia, under the patronage and protection of the Emperor Napoleon, for the purpose of making purchases of goats of the genuine Cashmeer breed, in the province of Caspahan. A considerable number of these animals was procured; and although many of them died in their long march to the coast of the Euxine, and in their passage thence by sea to Perpignan, yet a certain number survived, and were brought to Paris by M. Terneau, in the year 1823.

Mr. Tower, happening at that time to be in Paris, purchased four of them, two males and two females, and succeeded in conveying them safely to his residence in Essex.

The soil of the park at Weald Hall, where they have been kept ever since, is moist, and the situation is much exposed. The animals have, nevertheless, continued in health, and have multiplied rapidly; so that his present flock consists of twenty-seven, including the four original ones. Of these latter, a polled female, which was old when purchased by him, has every year produced at least one kid, and has twice had twins. Those individuals of which the horns cross, are in Persia esteemed the best; and one of Mr. Tower's last year kids has this peculiarity. They shew no impatience of cold, and are very healthy, requiring only the occasional shelter of a shed in very rough weather. In spring, summer, and autumn, they graze like sheep, and during winter have been fed with

hay and refuse vegetables from the garden; but their favourite food is the gorse (Ulex Europæus), which they devour eagerly, without being annoyed by its prickles. They damage young plantations, but not more than other goats or deer will do. They breed very early; three of Mr. Tower's goats this year produced kids before they were themselves a twelvemonth old.

A few produce brown down; but that of by far the greater proportion of the goats is white; and this latter is more valuable than the other.

The coat is a mixture of long coarse hair and of short fine down: this latter begins to be loose early in April, and is collected easily and expeditiously by combing the animals two or three times with such a comb as is used for dressing horses' manes. A good deal of the long hair comes off at the same time, but the manufacturer has found no difficulty in separating it.* The produce of a male is about four ounces, and of a female about two ounces. Two pounds of down, as it comes off the goat's back, may be estimated to make one shawl fifty-four inches square. It will therefore require ten goats, male and female, to furnish materials for one shawl.

Mr. Tower has this year had three shawls made of his down, one of which was examined by the committee of manufactures. The yarn was spun by Messrs. Pease, of Darlington, and was woven by Messrs. Miller and Sons, of Paisley. Mr. Tower's shawl was compared with

* A considerable quantity of rough Cashmeer wool was imported from India a few years ago, and baffled the attempts of the manufacturers to disentangle the down from the hair; probably in consequence of the down having become felted in conveying it from Cashmeer and shipping it from Calcutta.

one made in Scotland of French shawl-goat wool, to which it was evidently far superior. It was also compared with a French shawl of M. Terneau's own make, and was considered by very competent judges to be superior to this also.

PAPERS

IN

COLONIES AND TRADE.

No. I.

WINE FROM NEW SOUTH WALES.

The GOLD CERES MEDAL *was presented to* GREGORY BLAXLAND, *Esq. of Sydney, New South Wales, for Wine, the produce of his Vineyard in that Colony.*

SIR, 75, *Old Broad Street, Feb.* 25, 1828.

I HAVE to request that you will lay before the Society the enclosed bill of lading and other documents respecting a pipe of wine, the produce of my vineyard in New South Wales last year, 1827, for which I beg to make my claim for the gold medal offered by the Society.

I have also sent for their inspection samples of the two best half pipes, the one in pint bottles from No. 1, the other in quart bottles from No. 2. From experience, I find, that as the vines become more matured by age, the wine in every situation is of a much better quality. Before I make farther observations on the quality of the two samples, it will be necessary to state, that the vineyard is situate on the side of a very steep hill. The cask

No. 1 was made from the grapes which grew on the top of the hill; they were the first ripe; the soil thin and dry, totally unfit for agricultural purposes: the other, No. 2, from grapes that grew on the centre of the hill, on a deeper and richer soil; they were ripe in about a week after the first. More wine was made from the grapes at the bottom of the hill, where the soil is rich and deep, but it was of a very inferior quality; which rich deep soil, from the experience I have had in the colony, I consider totally unfit for the production of wine of value for commercial purposes, unless it is made into brandy soon after it has done fermenting, as it appears neither to possess flavour, nor the property of keeping long in the cask free from acid.

I also forward two copies of a work published in the colony on the culture of the vine, &c., which I beg may be placed in the library of the Society.

I am, Sir, &c. &c.

A. Aikin, Esq.
Secretary, &c. &c.

Gregory Blaxland.

It appears from the custom-house documents produced before the Committee, that Mr. Bloxland shipped at Sydney, on the 5th of February, 1827, three half pipes of colonial wine, the produce of his own vineyard; ten per cent of French brandy having been previously added to it, in order to enable it to bear the voyage. Of the two half pipes, which, on their arrival in the Thames, appeared to be the best, Mr. Blaxland sent samples in bottle.

The grape from which the whole was made is a small black cluster grape, supposed to be a seedling from the

claret grape, as mentioned in Mr. Blaxland's letter, printed in the 41st volume of the Society's Transactions.

On tasting the samples, it was the general opinion that both of them are decidedly better than the wine for which, in 1823, Mr. B. obtained the large silver medal of the Society, and that they were wholly free from the earthy flavour which unhappily characterises most of the Cape wines. The colour of the wine is a tawny red.

No. II.

PIGMENTS FROM CANADA.

The GOLD ISIS MEDAL *was voted to* W. GREEN, *Esq. of Quebec, for his Communication respecting certain Pigments, the produce of Canada; Specimens of which have been placed in the Society's Repository.*

SIR, *Quebec, 27th December*, 1827.

BY desire of his Excellency the Earl of Dalhousie, I have the honour to communicate to you, for the information of the Society of Arts, some specimens of colours, which I prepared from materials produced in this country; and which, having been submitted to the Literary and Historical Society of Quebec, have been honoured by that order for their transmission to you which I now obey.

I am, Sir, &c. &c.

W. GREEN,
Secretary.

A. AIKIN, *Esq.*
Secretary, &c. &c.

At a meeting of the Literary and Historical Society of Quebec, held at the Castle of St. Lewis, in the city of Quebec, this 1st day of February, 1827,

Present, His Excellency the Earl of Dalhousie, Governor-in-chief, and other Members.

William Green, Secretary, presented to the Society a box, containing specimens of colours by him prepared from materials produced in Lower Canada, accompanied by a paper in explanation of them, which is read. And on the motion of his Excellency the Earl of Dalhousie, it is ordered, That the thanks of this Society be given for this communication, and that the same be laid before the Society for the Encouragement of Arts, Manufactures, and Commerce, in London.

(Certified) W. Green,
Secretary and Treasurer.

Memoranda respecting Colouring Materials produced in Canada.

This country produces various substances fit for the use of artists as pigments.

In the parish of L'Ancienne Lorette, and in that of St. Augustin, near Quebec, there exists in alluvial soil, at the depth of three feet, a horizontal stratum of fine yellow clay (No. 5). This earth has a very deep and rich hue, and, with white in various proportions, gives all the tints which the best yellow ochres afford. Burnt, it gives a light red, resembling that formed by burning yellow ochre, but inclining more to orange. It is an opaque colour,

and mixes well with oil or with water, and in oil it dries well.

The Magdalen Islands, in the Gulf of St. Lawrence, produce a red earth (No. 3), which is brought to Quebec in lumps. In these are interspersed minute portions of some white substance, which seems of the same consistence as the red earth. The texture of this earth is extremely fine, and the quantity of foreign gritty matter deposited on washing it in water inconsiderable. It nearly resembles Indian red. I do not perceive any inferiority, or any other difference than this, that the Canadian earth, in its natural state, is rather the paler of the two, with more of the hue of red lake; yet it is a very deep red, quite as deep as can be required for any purpose in painting. Burnt (No. 4), it becomes more bright. With white the tints are all beautiful. Those formed from the raw material partake of the hue of red lake, and those made with burnt earth seem tinged with vermilion.

This substance, both in its natural and in its burnt state, might be worthy of the attention of artists, being quite as beautiful, and probably as useful, as Indian red. In price there is great disparity; the red earth being sold at Quebec for three-pence a pound (which is only half the price of common red ochre), and the price of Indian red in London being above two shillings an ounce. Yet all the red ochres, whether native or artificial, which are used in the arts, are, with the single exception of Indian red, inferior to this earth. The red earth is somewhat transparent, but by no means sufficiently so to be removed from the class of opaque colours. It mixes with oil and with water; and in oil it dries readily.

At St. Paul's bay, on the north shore of the St. Lawrence, an earth (A) is washed down from the mountains, which is of less weight than most other earths. In its dry state it is of a rich cinnamon colour. In oil it is transparent, and of a tint intermediate between those of raw and of burnt umber. Made red hot, and extinguished in water, a sulphureous odour is given out; and the burnt matter, well washed and dried, inclines rather more towards red than before, but loses its transparency. In this state it would probably have no peculiar utility. The transparent tint it affords with oil in its raw state might be very useful, unless the sulphur it appears to contain should impair its properties. This, however, may not be the case, as vermilion, which is a sulphuret (of mercury) is durable, whether combined with other colours in oil or not. As a colour for glazing, this circumstance forms a slighter objection than it might do were the substance used in combination with white or other colours. Indeed, it appears best adapted for glazing, as there is no peculiar beauty in the tints it forms with opaque colours.

At St. Foy,* I discovered, imbedded in whitish clay, numerous nodules of a brown substance (B) which contains iron. They are friable. They yield a deep transparent brown, which dries readily, and resembles umber, to which it is superior. It is improved by burning.

Many of the spontaneous vegetable productions of this country are capable of affording brilliant and durable colours to the painter and the dyer. The Indians extract from the root (C) of a wild plant, which bears some resemblance to madder, a very bright and permanent red dye, with which they tinge their porcupine quills, elk

* Five miles west of Quebec.

hair, and other substances. A red lake (No. 2) has been extracted from it, by boiling it in a solution of alum in water, (after having separated a quantity of brown colouring matter, by washing the root in cold water, in which the brown, but not the red, matter is soluble,) and precipitating the red substance from the aluminous solution by means of an alkali. The hue of this lake, when used in oil, is equal in beauty, but not in intensity, to that of the finest carmine, and resists the action of light much longer. Patches of various specimens of carmine and red lake from cochineal were painted in oil on a window-pane, which all faded more or less, and some nearly disappeared, on being exposed to a strong light for two weeks; while patches of red lake from the Indian plant still remain unchanged, after exposure in a similar situation during two years.

This plant is called by the Hurons *Tsavooyan.* It is found of superior quality in the interior. Its root, when dry, is scarcely thicker than a coarse thread, and runs horizontally through the loose soil formed in the woods by the decay of fallen leaves. Its stalk is four-sided, furnished with short retroverted hairs, and is surrounded at intervals by small oval leaflets, forming a star. The stalk, from its length and weakness, becomes procumbent. *Galium tinctorium* is said to be its name. On extracting this root from the soil, it frequently is quite colourless and transparent; but in a few minutes after extraction, it acquires its dark hue, and the property of yielding its brown and its red colours. The brown matter, separated by water previously to the extraction of the red, may be precipitated by alum, and is a deep reddish-brown (No. 1), of high beauty, and is very durable, fit for use in oil or in water.

Another plant grows in similar situations, which has the same name of *Tsavooyan*, but which does not resemble madder. The roots, and the roots only, of both *Tsavooyans* have some external resemblance to each other, but differ in many respects. The latter is bright yellow, the former deep brown. The latter is not used in dyeing, but is valued as affording an agreeable bitter, and as having the property, when chewed, of curing some kinds of sore mouth.

The Indians dye a very bright and durable yellow with the seeds of a shrub common on the banks of rivers and lakes. The leaves are fragrant, the seeds very aromatic, and the plant has the aspect of a willow. It is probably *Myrica gale*. The Hurons call it *Ootsi gooara osookwa*, which signifies yellow dye stuff.

A very rich and durable brown for dyeing, and a lake of the same colour for painting (No. 6), are afforded by the outer husk of the Canadian "butter-nut" (*Juglans cathartica*). The colour is copiously extracted by infusion in warm water, and may be precipitated either by alum or muriate of tin; and if by the latter, it will dry the quicker in oil. It is of a tint intermediate between those of asphaltum and prussiate of copper.

I am not aware that any of the above-mentioned substances have ever before been prepared, or proposed as a colouring material for the use of artists.

W. Green.

Quebec, 1827.

Specimens of the pigments were put into the hands of Mr. Brockedon and of Mr. C. Varley, for trial. The

former gentleman reported to the Committee, that the red lake from the Galium tinctorium, on comparison with fine English and French madder lakes, differs from them in being a purer red, unmixed with yellow or purple; that the brown red lake, obtained also from the Galium tinctorium, is far superior to that at present in the shops, prepared by torrefying madder lake. The red ochre No. 4 gives a tint quite equal to the average quality of Indian red, though not as good as the best kinds. The yellow ochre No. 5, and the red produced by burning the same, are respectively quite as good as those usually met with.

Mr. B. also stated, that he has recently made trial of the common black manganese of the shops. He finds it to be a very useful grey colour, with much body, and possessing the property of drying almost immediately with oil.

The result of Mr. C. Varley's experiments is contained in the following letter:—

46, *Holywell Street, Millbank, Westminster,*
February 20, 1828.

SIR,

I have compared the colours sent by Mr. Green from Canada with those in common use, and find them generally very good. The dark reddish brown No. 1 is a very useful colour, being nearly the same tint, but richer than madder brown.

The lake No. 2 is a very valuable colour: it is a little flesh coloured, or yellowish, when compared with Mr. Field's madder pink, and therefore not quite equal to it, but is as often wanted: it is much higher in tone than vermilion.

The red ochre No. 3 is not wanted; that marked 4, when a little dirty, giving the same tint.

The red ochre No. 4, and the yellow ochre No. 5, are so perfectly like the English ochres as to be equally good.

The brown ochre marked A is not quite so rich as our Roman ochre.

The brown No. 6, and that marked B, are not wanted, being exactly of the same colour as English coals, which, when finely ground, give an excellent brown, a little darker than Vandyke-brown. I may also add, that Welch coal gives a still darker brown, so exactly like seppia in colour, that one may be used for the other. The paper which accompanies this has the Canadian colours side by side with the English colours.

I am, Sir, &c. &c.

CORNELIUS VARLEY.

A. AIKIN, Esq.
Secretary, &c. &c.

No. III.

INSECTS INFESTING THE SUGAR-CANE.

The GOLD CERES MEDAL *was voted to the Rev.* LANSDOWN GUILDING, *B.A., F.L.S., F.G.S., &c. for his Memoir on the Insects that infest the Sugar-Cane in the West Indies.*

INSECTA COLEOPTERA.

Curculionites. Lat.

** Fracticornes.

Fam. *Calandradæ.* Guild.

Genus *Calandra Clairv.* Fab., Lat.

Curculio. Linn.

CHARACTER GENERICUS.

**Caput* parvum, immersum: *oculi* magni, oblongi, caput cingentes. *Antennæ* in fossulâ baseos *rostri* elongati, cylindrici, nutantis, ante oculos positæ; articulis octo vel novem, *scapo* longissimo, cylindrico, clavolæ longitudine, *capitulo* solido, bifariam truncato, apice coriaceo, spongioso. *Mandibulæ* tridentatæ, validæ. *Corpus* elliptico-ovatum, suprà planum. *Thorax* antice in collare constrictus. *Elytra*

* *Head* small, immersed; *eyes* large, oblong, surrounding the head. *Antennæ* from a fissure in the base of the elongated, cylindrical, deflexed *rostrum*, placed before the eyes; clavola eight- or nine-jointed, on a cylindrical stem, as long as the clavola; *terminal joint* solid, oppositely bevelled, terminated by a spongy coriaceous point. *Mandibles* strong, three-toothed. *Body* elliptic-ovate, flat above. *Thorax* contracted

brevia, truncata. *Alæ* elongatæ, neuris validis. *Anus* acutè prominulus, deflexus. *Pedes* in omnibus validissimi, femora inermia, gonytheca profunda, tibiis intùs ciliatis, duabus vel quatuor anticis sæpè intùs unidentatis, pilis nonnunquam in femoribus et tibiis in penicillum dispositis. *Calcaria* terminalia, incurva, validissima: tarsi tetrameri: *allux* cordatus. *Sola* densè vestita. — Vide *Latr. Gen. Crust. et Ins.*

---

1. *Calandra palmarum.* Fabr., Lamar.

Curculio palmarum. Linn.

C. aterrima, elytris subquinque striatis, striis lateralibus abbreviatis: podice triangulari, ciliato: rostro (maris) scopulâ densâ longitudinali.

C. dark black, elytra with five larger, and a few abbreviated lateral striæ. Podex triangular and ciliated, the rostrum of the male furnished with a longitudinal brush.

Descriptio.

**Corpus* durissimum, nuper declaratum, atro pruinatum, mox nitens: hic et hic obscurè punctulatum: *femora* intùs hirsuta, basi fasciculata: *tibiæ* quatuor anticæ unidentatæ,

anteriorly. *Elytra* short, truncated. *Wings* elongated, with strong fibres. *Anus* somewhat acutely prominent, deflexed. *Feet* very strong, femora unarmed, gonytheca deep, tibiæ ciliated internally; the first, and sometimes also the second anterior pair, unidentate internally; femora and tibiæ sometimes bearing pencils of hair. *Calcaria* terminal, incurvated, very strong: tarsi in four joints: *allux* heart-shaped. *Soles* densely clothed.

* *Body* very hard, at first dull with black dust, afterwards shining; here and there obscurely dotted: *femora* hairy internally, fasciculated at their base: *tibiæ*, the two anterior pairs one-toothed, fasciculated:

fasciculatæ: *elytra* apice sinuosa: *hypoderma* flavidum: *alæ* nitentes, nigro flavescentes: *rostrum* fœminæ debile, nudum: *oviductus* tubulo exserto incurvo: antennarum *capitulum* villosulum: acaris sæpè infestatur: expansio alarum 2 unc. 11 lin.

Larva brevis, obesa, ferrugineo-flavum, *capite* brunneo, *labro* spinuloso. *Thoracis, caudæ* complanatæ maculæ, puncta setigera sparsa, spinæque terminales obtusæ, ferrugineæ: *anus* obliquè truncatus, maculis duabus lunatis spiraculiferis: *spiracula* minuta.

Nympha ferrugineo-flava, *rostro* corrugato, hirsuto: *segmenta* abdominalia adminiculis et spinulis sparsis: *ano* obtuso, scabro, lateribus corrugatis

Folliculus maximus, è fibris palmarum contextus, acaridis innumeris intùs habitantibus in hoc stadio infestatur.

The strength of the legs of these insects is incredible. I have known one by pressure to bring to the ground a large bird, which had seized it in his bill. Some species pinch severely by pressing the rostrum to the breast.

Explanation of the Figures.

1. The female flying; 2, the male creeping; 3, the terminal

elytra sinuated at their apex: *hypoderma* yellowish: *wings* shining, of a brownish yellow colour: *rostrum* of the female weak, naked: *oviduct* with bent exserted tube: *capitulum* of the antennæ somewhat villous: expansion of the wings 2 inches 11 lines. Is often infested with acari.

Larva short, fat, rusty yellow; *head* brown, upper *lip* spinulose: the spots of the thorax and of the flattened tail, the setigerous dots of the body, and the terminal obtuse spines, of a ferruginous colour. *Anus* oblique, with two lunate spots, bearing minute spiracula.

Nympha brownish yellow; *rostrum* corrugated, rough: abdominal segments covered with scattered hairs or bristles. *Anus* obtuse, rough, with corrugated sides.

Case very large, composed of intertwined palm fibres, usually (in this colony) affording shelter to multitudes of acari.

segment of the antennæ; 4, the gonytheca; 5, the rugose apex of the rostrum; 6, the same viewed from the under side; 7, the larva; 8, the pupa; 9, the case or follicle;—all of the natural size.

Inhabits the Tropics. The larva perforates dead or injured palms, chiefly the gru-gru (cocos fusiformis), and occasionally attacks the sugar-cane.

The larvæ are highly valued by the old Creoles, who send negroes into the woods to cut open decayed palm-trees, and procure these fat and precious dainties. They are fried in the same manner as the Hottentots (who alone should eat them) dress the swarms of termites; though, I believe, with the addition of butter, which they do not seem to require. It is but fair to add, that this disgusting dish is but seldom produced at the present day.

---

2. *Calandra saccheri.* Guild.

The larger Borer.

C. vitellino atroque varia, thorace trilineato, elytris punctato-striatis, alis nigro-fulvis, neurâ costali serrulatâ, tergo sericeo-flavo.

C. varied with black and yolk-yellow: thorax with three black lines: elytra punctate, striated: wings black, fulvous: the costal nervure serrulated: back silky yellow.

The larva is found in the sugar of the West Indies: the perfect insect is often to be met with in decayed vegetable matter. Length of the body $\frac{6}{10}$ths of an inch; spread of the wings 1 inch 1 line.

**Corpus* obscurè punctulatum: *thorax* vitellino-flavus, lineis tribus nigris, lateralibus abbreviatis: *pectus* nigrum, lineis

* *Body* obscurely punctated: *thorax* egg-yellow, with three black lines, the lateral ones the shorter: *breast* black, with three yellow lines: the

tribus flavis: *ventris* maculæ tres, *femorum*que fasciæ, flavæ: *elytra* atra, flavo maculata, striarum puncta papillata: *scutellum* antice flavum: *rostrum* apice nigrum: *pulmonaria* prominula.

Var. β. Sanguineo-castanea, elytrorum margine maculâque disci trilobatâ nigris: *femora* simplicia: *antennæ* villosulæ.

Larva obesa, flavescens, adminiculis scabra: *ano* declivi, setoso: *latera* prominula: *spiracula* majora: *caput* hirsutum, *collum*que ferruginea: *mandibulæ* brunneæ, validæ.

Nympha flavo rufescens: *capite* bi-tuberculato, bi-setoso: *rostrum* medio tumidum, quadri-setosum: *femora* apici uni-setosa: *anus* appendiculatus, appendiculis setiferis: *abdomen* spinulosum.

Explanation of the Figures.

1. Calandra sacchari; 2, variety of the same; 3, the case or follicle; 3 *a*, the case in the stem of a sugar-cane; 3 *b*, an empty case; 4, the pupa, magnified, seen from below; 5, the pupa seen from above; 6, the larva, magnified.

Mr. Kirby thinks this insect may be the C. sericea *Oliv.* pl. 28, f. 409.

spots of the *belly* and fasciæ of the *thighs* yellow: *elytra* black, spotted with yellow: *scutellum* yellow in front: *rostrum* yellow at the point: *chest* somewhat prominent.

Var. β. chestnut red, the margin of the elytra and the trilobate spot of the disk black: *thighs* simple; *antennæ* somewhat villous.

Larva fat, yellowish, scabrous with small bristles: *anus* depending, bristly: *sides* prominent: *spiracula* rather large: *head* hairy, and, as well as the *neck*, ferruginous: *mandibles* brown, strong.

Nympha russet-yellow: *head* bi-tubercular, with two setæ: *rostrum* tumid in the middle, with four setæ: *thighs* with one seta at the apex: *anus* with setiferous appendages: *abdomen* spinulose.

INSECTA LEPIDOPTERA.

Fam. *Pyralidæ*. Leach.

Genus *Diatræa* (à διατρέω, perforo). Guild.

CHARACTER GENERICUS.

**Caput* parvum: *oculi* subprominuli: *antennæ* setaceæ, inter oculos in vertice positæ, suprà squamulosæ, subtùs ciliatæ, scapo majori vix in maribus crassiores. *Antlia* brevis: *palpi* quatuor, squamis longis hirsutissimi: *maxillares* breves, bi-articulati, articulo basilari curvo, ultimo crassiori subovato, apice subacuminato: *palpi labiales* horizontaliter elongati, rostriformes, longissimi, tri-articulati, articulo basilari brevi, curvo, crasso, secundo attenuato, tertio brevi, minori: *vertex* hirsutus: *facies* minùs vestita: *alæ* superiores in quiescente deflexæ, elongato subtriangulares, inferiores minùs plicatæ: *fibulâ* completâ: *pedes* breves, medii longiores, anteriores *culcitâ* parvâ. *Tarsi* omnes pentameri, femora gracilia: *tibiæ* quatuor anticæ bi-calcaratæ, posticæ quadri-calcaratæ, (maris) flocculiferi: *unguiculi* breves.

* *Head* small: *eyes* rather prominent: *antennæ* setaceous, placed between the eyes on the vertex; scaly above, ciliated beneath; in the male scarcely thicker than the stem: *antlia* short: *palpi* 4, very rough with long scales; the maxillary ones short, bi-articulate, the basilary joint bent, the last thicker, subovate, somewhat pointed at the extremity; the *labial palpi* very long, rostriform, horizontal, tri-articulate, the basilary joint short, thick, curved; the second attenuated, the third smaller and shorter: *vertex* hirsute; *face* more bare: *upper wings* deflexed when the insect is at rest, elongated, subtriangular; the *lower wings* less folded: *fibula* complete: *feet* short, the middle pair longer, the anterior with a small *culcita*. *Tarsi* pentamerous, thighs slender, *tibiæ* of the two anterior pair of legs 2-spurred, of the hinder pair 4-spurred, and in the male flocculiferous: *unguiculi* short.

Larva elongata: pedes 6; propedes, abdominales 8, anales 2: *adminiculis* coronâ completâ dispositis: *spiracula* cervicalia 2, abdominalia 16: *segmenta* abdominalia 12; 1, 2, 3, 6, 7, 8, 9, et ultimo pedatis. *Pupa* elongata, sigillis mesothoracis longitudinalibus: *segmentorum* adminiculis sparsis: *anò* angulato, spinoso.

Diatræa sacchari.

The Borer.

D. straminea, alis superioribus sordidè ochraceis, lineis duabus obliquis nigricantibus, disci atomo unico, marginis plurimis atris: alis inferioribus pedibusque argenteo-flavidis.

D. straw-coloured, upper wings dirty ochre, with two blackish oblique lines, one black dot in the centre, and several on the margin: lower wings and feet pale yellow. Larva yellowish, spotted with black, rather hairy; head and neck ferruginous; dorsal line yellowish; lateral spots livid; thoracic feet 6; abdominal 8; anal 2. Body much lengthened.

Explanation of the Figures.

1. The male, magnified; 2, the real size of the insect.

1 *a*, the head; 1 *b*, one of the labial palpi; 1 *c*, one of the maxillary palpi; 3, the larva, magnified; *a*, one of the propedes or membranous feet; 4, the pupa; 5, portion of a sugar cane;

Larva elongated: feet 6; propedes, abdominal 8, anal 2; the bristles disposed in a complete ring: *spiracula*, cervical 2, abdominal 16: *abdominal segments* 12; 1, 2, 3, 6, 7, 8, and the last furnished with feet.

Pupa elongated; *sigillæ* of the mesothorax longitudinal; bristles of the segments scattered: *anus* angulate, spinous.

a, the hole bored by the larva for the escape of the winged insect; *b b*, holes by which the young larva enters, the eggs having been deposited under the sheath of the leaves; 6, anterior foot of the sphinx, *a*, the culcita; 7, 8, the culcita and cavity in which it is contained shewn separate; 9, anterior foot of the conocephalus, shewing the two openings of the scutula: 10, foot of the pterophylla (Kirby); 11, foot of the acheta (Fabric.); *a*, the small scutula on the other side of the limb.

The extensive injuries occasioned by the animals which are here briefly described, are well known in Europe, and many great rewards have been held out to those who should discover a method of banishing these plagues from our colonies in the West Indies.

The *Calandra palmarum* is principally injurious to the plants lately stuck in the ground, to which the female is allured by the juices which are exuded. These they sometimes attack so vigorously that a fresh planting becomes necessary. They do not seem to deposit their eggs in full-grown canes, when palms are abundant in the neighbourhood.

Calandra sacchari confines itself principally to such canes as have been slightly injured; though it sometimes attacks the more vigorous plants, which it excavates to the very ground, voiding its excrements in scarcely discoloured grains, which fill up the passage.

But by far the most destructive and common enemy is the smaller grub of the moth, whose description is given above. The sugar-cane, so valuable to man in all its parts, is never exempt from this dreaded pest. Fortunately, in the seasonable climate of St. Vincent, from our improved cultivation, the animal is not very formidable; but in some other of our colonies, which,

from the absence of mountains, or other causes, are subject to dry seasons, they have been known to blast the hopes of the year, to destroy whole acres of canes, and ruin the unfortunate planter. The Society of Arts has long offered rewards for the expulsion of the borers, but, I think, will do well in future to omit the premium offered for their destruction, inasmuch as it is to be feared no remedy can be applied on extensive tracts of land, which would not at the same time destroy the plant we would protect, or which would not prove too expensive for general adoption. The object of the planter should be to prevent the insects from depositing eggs in the plants, rather than to kill those which have already begun their operations.

Those animals which the Creator has thought fit to form and preserve for ages, man will not be permitted to *exterminate:* we may, however, with propriety, strive, by all means in our power, to lessen the number of those creatures which injure or destroy our property. From long-continued experiments I have at last discovered that they may be almost entirely expelled from any quarter in which the canes are carefully stripped of the dry and useless leaves, under which, as they become loose, the female borer deposits her eggs.

These animals, when they assail us in moderate numbers, act only as a stimulus, wisely sent to rouse the inattentive planter to cleaner and more careful modes of husbandry. When they swarm so as to deprive him of his crops, the loss must in future be attributed either to his obstinacy or his negligence.

It is well known that the vaginating leaves of the cane hold for a long period the water which has been

collected in them during rains, from which, in dry weather, the plant may doubtless derive nourishment. In the drier islands, the planter will probably object to the only plan which seems capable of lessening the number of his foes, under the idea that he will expose the plants too much to the merciless rays of the sun. I do not by any means recommend that a single living leaf should be taken off; and a very slight examination will convince him that those which have begun to wither are incapable of holding water for the refreshment of the cane.

The borers are observed to be much more fatal to plant than to ratoon canes, which should of course be oftener visited by the parties of negroes whose business it is to collect the trash. A single cane will sometimes nourish several of the borer worms, which perforate every joint; when the pithy centre becoming discoloured and sour, not only yields nothing at the mill, but communicates a dark colour and bad quality to the sirop of the sounder plants.

Of the other enemies of the sugar-cane I can for the present speak but slightly. The large fire-fly (Elater noctilucus) has been said, but perhaps only accidentally, to have been bred in it. An undetermined aphis, and the "jumper fly," probably one of the Chrysomelidæ, have in some islands proved injurious, but have never been noticed here. The myriads of ants which once infested, but have now disappeared from Grenada, committed indeed the most frightful ravages; but it was rather by excavating their little metropolis beneath the roots, than by attacking the body of the cane. Were these little carnivorous agents less prolific than they

are, we might encourage them as useful helpmates in the destruction of the borers, which they pursue and kill in their cylindrical labyrinths.

Kingstown, St. Vincent, West Indies,
March 26, 1827.

POLITE ARTS.

The following is a List of those Individuals to whom MEDALS, *for proficiency in various branches of the* POLITE ARTS, *were presented during the last Session.*

(HONORARY CLASS).—COPIES.

To Mr. Al. Beaumont, County Fire Office, Regent-street, for a copy in pen and ink of figures, the Silver Isis Medal.

To Mr. W. Price, 46, Warren-street, Fitzroy-square, for a copy in chalk of a head, the Silver Palette.

To Mr. T. Underwood, Colemore-row, Birmingham, for a copy in pencil of a landscape, the Silver Isis Medal.

To Mr. R. Finlayson, 45, Upper Baker-street, for a copy in water-colours of an historical subject, the large Silver Medal.

To Miss F. Burnell, 14, Park-square, Regent's-park, for a copy in chalk of a head, the Silver Palette.

To Miss M. H. Crutwell, 59, Stafford-place, Pimlico, for a copy in chalk of a head, the Silver Isis Medal.

To Miss Wiggins, 130, Piccadilly, for a copy in Indian ink of a landscape, the Silver Isis Medal.

To Miss L. Welby, 100, Guilford-street, for a copy in pencil of a landscape, the Silver Palette.

To Miss L. Corboux, 5, Hercules-buildings, Lambeth, for a copy in chalk of an historical subject, the Silver Isis Medal.

To Miss E. Blair, 39, Welbeck-street, for a copy in chalk of an historical subject, the large Silver Medal.

To Miss J. W. Leith, 32, Kenton-street, Brunswick-square, for a copy of a portrait in miniature, the Silver Palette.

To Miss B. S. Wiggins, 130, Piccadilly, for a copy in water-colours of a landscape, the large Silver Medal.

To Miss E. Parker, 19, Great Newport-street, for a copy in water-colours of a landscape, the Silver Isis Medal.

To Miss J. W. Hurlstone, 52, Sloane-street, for a copy of flowers in water-colours, the large Silver Medal.

To Miss Lester, 10, Elm-street, Gray's-inn-lane, for a copy of flowers in water-colours, the Silver Isis Medal.

To Mr. J. W. Moore, 6, Argyll-street, for a copy in pencil of an animal, the Silver Isis Medal.

To Miss Murray, 72, Euston-square, for a copy in oil of a landscape, the large Silver Medal.

To Miss E. A. Dyer, Didmarton, Gloucestershire, for a copy in miniature of an historical subject, the Silver Isis Medal.

DRAWINGS FROM BUSTS.

To Miss M. A. Williams, 12, Charlotte-street, Bloomsbury, for a drawing in chalk from a bust, the Silver Palette.

To Miss J. Eggbrecht, 16, Frith-street, Soho, for a drawing in chalk from a bust, the Silver Palette.

ORIGINAL.

To Miss E. F. Haworth, Barham-wood, Elstree, Herts, for an original historical miniature, the Gold Isis Medal.

To Miss M. Jones, 8, Coleman-street, for an original portrait in miniature, the Gold Isis Medal.

To Miss Mintorn, Woodfield Cottage, Bristol, for an original portrait in miniature, the large Silver Medal.

To Miss Witts, 8, Brunswick-square, for an etching of an animal, the large Silver Medal.

To Mrs. Jos. Stannard, St. Giles's, Norwich, for an original oil painting of dead game, the Gold Isis Medal.

ARTISTS.

Copies.

To Miss Chapman, 106, Great Russell-street, for a copy in water-colours of figures, the large Silver Medal.

To Mr. J. H. P. Stubbs, 28, Allsop's-buildings, New-road, for a copy of figures in pen and ink, the Silver Palette.

To Mr. J. Pasmore, 6, Salisbury-court, Fleet-street, for a copy in pencil of a head, the Silver Palette.

To Miss F. Riviere, 8, Cirencester-place, Fitzroy-square, for a copy in chalk of figures, the Silver Isis Medal.

To Mr. Jas. Walsh, 11, New Burlington-street, for a copy in water-colours of figures, the Silver Isis Medal.

To Miss Eliz. Setchell, 23, King-street, Covent-garden, for a copy in chalk of a head, the Silver Isis Medal.

To Miss L. Lyon, 22, Nassau-street, Cavendish-square, for a copy in miniature of a portrait, the large Silver Medal.

To Mr. J. Peake, 26, Clarendon-street, Somers-town, for a copy in pen and ink of a landscape, the Silver Palette.

To Miss L. Derby, 12, Osnaburgh-street, Portland-place, for a copy in pencil of a landscape, the Silver Isis Medal.

To Miss E. Crabb, Point Pleasant, Wandsworth, for a copy in water-colours of a landscape, the Silver Palette.

To Mr. C. F. Du Pasquier, St. James's Palace, for a copy in pencil of animals, the Silver Isis Medal.

To Mr. R. Shaw, 20, Hemming's-row, St. Martin's-lane, for a copy in pencil of animals, the Silver Palette.

DRAWINGS AND PAINTINGS FROM BUSTS AND STATUES.

To Mr. E. U. Eddis, 1, Barnsbury-street, Islington, for a drawing in chalk from a bust, the large Silver Medal.

To Mr. C. G. Hill, Queen-street, Golden-square, for a drawing in chalk from a bust, the Silver Isis Medal.

To Mr. J. White, 14, Brownlow-street, Holborn, for a painting from a bust, the large Silver Medal.

To Miss C. Derby, 12, Osnaburgh-street, Portland-place, for a painting in oil from a bust, the Silver Isis Medal.

To Mr. C. W. Cope, 45, Clarendon-square, Somers-town, for a finished drawing from a statue, the large Silver Medal.

To Mr. A. H. Taylor, 3, Lower Stamford-street, Black-friars, for a finished drawing from a statue, the Silver Palette.

ORIGINAL.

To Mr. Ed. Hassell, 12, Upper Belgrave-place, Pimlico, for a painting in oil of the altar-piece of St. Margaret's Church, the Silver Palette.

To Mr. A. R. Slous, 6, Bayham-street, Camden-town, for an original historical composition in water-colours, the large Silver Medal.

To Mr. J. W. Solomon, 8, King-street, Covent-garden, for an original historical composition in oil, the large Silver Medal.

To Mr. D. Pasmore, 6, Salisbury-court, Fleet-street, for an original group of portraits in miniature, the Gold Isis Medal.

To Miss L. J. Green, 8, South-crescent, Bedford-squ. for an original portrait in miniature, the Gold Isis Medal.

To Miss Alabaster, 58, Piccadilly, for an original portrait in oil, the Gold Isis Medal.

To Mr. James Y. Gant, 54, Greek-street, Soho, for an original portrait in oil, the large Silver Medal.

To Mr. W. H. Freeman, 2, Stanhope-str. Clare-market, for an original landscape in oil, the large Silver Medal.

To Mr. C. Marshall, 24, Everett-street, Brunswick-square, for an original landscape in oil, the Gold Isis Medal.

To Mr. W. R. Patterson, 2, Broadway, Westminster, for an original marine painting in oil, the large Silver Medal.

To Mr. A. G. Vickers, 8, Barton-street, Westminster, for an original marine painting in oil, the Gold Isis Medal.

To Mr. W. A. Crabb, Point Pleasant, Wandsworth, for an original oil painting of flowers, the large Silver Medal.

To Miss L. A. Shaw, Stonehouse, Plymouth, for an original painting in oil of fruit and flowers, the Gold Isis Medal.

To Mr. L. Wells, 2, Stanhope-street, Clare-market, for an original oil painting of still-life, the large Silver Medal.

To Mr. E. Lee, 26, Newland-street, Kensington, for an original historical composition in Indian ink, the Silver Isis Medal.

MODELS AND CARVINGS.

To Mr. J. Mason, Twickenham, for a model of a bust from life, the large Silver Medal.

To Mr. H. Hogan, 12, Park-street, Dorset-square, for a copy in plaster of an architectural ornament, the large Silver Medal.

To Mr. H. Bailes, 434, Oxford-street, for an original group of figures carved in wood, the large Silver Medal.

To Mr. S. Briant, 34, Monmouth-street, for his model of St. Clement's Church, the Silver Isis Medal and *5l.*

ARCHITECTURE.

To Mr. R. Stokes, 29, Lower Brook-street, Grosvenor-square, for a drawing in perspective from a Corinthian capital, the large Silver Medal.

To Mr. R. Garland, 13, Gray's-inn-terrace, for a drawing in perspective from a Corinthian capital, the Silver Isis Medal.

To Mr. T. J. Kilpin, 6, Orchard-street, Kingsland-road, for an original design for a Gothic cathedral, the large Silver Medal.

GEM ENGRAVING.

To Mr. C. Durham, 17, Arundel-street, Strand, for an engraving in intaglio of a head, the Gold Isis Medal.

To Mr. J. S. Phillips, 25, Kirby-street, Hatton-garden, for an engraving in cameo of a horse, the large Silver Medal.

ENGRAVING ON WOOD.

To Mr. M. M. Hart, 31, Gerrard-street, Soho, for engravings on wood, the large Silver Medal.

APPENDIX.

No. I.

BRITISH LEGHORN.

Lady Harriet Bernard, in a letter to the Secretary, dated Castle Bernard, Oct. 19, 1827, states that she has made some improvement in the mode of preparing the rye-straw, which is the material for plat employed in the school under her ladyship's patronage. The rye, instead of being pulled while the stalk is yet green and the grain milky, is allowed to grow till the grain is within about ten days of being ripe, by which means a more glossy and better-coloured straw is obtained. The process of scalding is replaced by simply drying in the air and sun, by which the gloss remains uninjured, and the hats, &c. made of such straw look really like new ones; whereas they but too often acquire by scalding the appearance of old hats after they have been washed or cleaned. Straw nearly ripe is also much more expeditiously bleached by the sun than when cut green,—a circumstance of no small importance to the Irish manufacturer.

No. II.

ARCHIL TEST PAPER.

Mr. Lewthwaite communicated to the Society a short notice on test paper, tinged blue by archil, as a substitute for that tinged blue by litmus. On some comparative experiments being made, the archil paper was found to be inferior to litmus paper as a test for acids, in the proportion of about one to five; but as a test for fixed alkalies and lime it is superior in delicacy to turmeric paper, in the proportion of about two to one: it is sooner affected by water mixed with carbonated magnesia, than turmeric paper is, and is also more affected than turmeric by the subsalts of lead. Boracic acid changes the colour of turmeric to red,—an anomaly that is likely to mislead young chemists; no such effect attends the action of boracic acid on archil paper.

No. III.

ITALIAN PLAT WHEAT GROWN IN ENGLAND.

A small quantity of Italian plat wheat having been placed at the disposal of the Society, a few grains were given to Mr. George Aikin, of Harlington, Bedfordshire. These grains, considered as a sample of bread-corn, were very bad, being light, small, and shrivelled. They

were sown, and that part of their produce which escaped the birds was drilled thick in February 1827 on a piece of poor gravelly soil. It ripened, and was cut in the second week of August. The plants came up considerably stronger than they had done the year before; and the straw, notwithstanding the dryness of the season, was too coarse for fine plat; but the sample of seed considered as corn was much improved. Hence Mr. G. Aikin infers, that Italian plat wheat, grown in England, will probably, in two or three generations, not be distinguishable from ordinary spring wheat.

No. IV.

ANIMAL AND VEGETABLE SPECIMENS PRESERVED IN BRINE.

In the 37th vol. of the Transactions will be found an account, by Mr. Cook, of his method of preserving anatomical preparations in brine. The specimens mentioned in that paper have continued ever since in the Society's possession — it being now thirteen years since they were first put up — and are at present in a state of perfect preservation, having neither lost their colour, nor having become corrugated, and the transparency of the liquor not being at all impaired.

The Secretary of the Society had recourse to the same method, last year, of preserving certain parts of vegetables, chiefly the seed-vessels and parts of fructification. Those which were merely put into a jar of

saturated brine became in the course of the autumn more or less injured by fibrous gelatinous mould growing upon them; but those which were kept in brine, to which more salt than it was capable of dissolving had been added, so as to saturate with salt the juices of the vegetable preparations themselves, have undergone no decomposition or change, except that of having lost their colour.

No. V.

RICE PAPER.

The so called rice paper of China is imported into this country in considerable quantity, where it is employed as a material for artificial flowers, and for other ornamental purposes. Its common name shews the popular opinion respecting its origin. The subjoined extract from a letter by John Reeves, Esq. of Canton, a member of the Society, shews that the rice paper is not a manufactured article, but an unchanged vegetable stem, cut spirally, and afterwards flattened by pressure.

Sir, *Canton, March* 7, 1826.

My son will forward to you a sheet of the substance called in England "rice paper," and a piece of the plant (or, I should rather say, of the branch of the plant) from which it is made; but whether this is a tree or shrub, I cannot at present discover, as the person from whom I

have my information had only seen the mode of cutting and using the plant.

The branches (?) being cut into lengths of the intended, or usual, breadth of the sheet of rice paper, are placed upon a thick piece of copper, with two raised edges, as guides to keep them steady; and being held in the left hand, are presented to the edge of a large knife, about ten inches long and three inches broad, made very sharp, and held in the right hand.

A slight incision being made in the branch for its whole length, it is kept moving round by the left hand, while the knife is also kept in motion by the right hand, and is thus sliced or pared down from circumference to centre, and then spread out to flatten.

The sheets are usually made up into bundles of nineteen or twenty pieces each, which weigh about twenty-three ounces, and are sold wholesale for about one dollar a bundle.

The refuse pieces, such as that sent you, are used for making artificial flowers.

It is chiefly brought from the island of Formosa, by the Chinese junks: hence the difficulty of ascertaining the nature of the plant, as few, if any, of the persons concerned in the sale of the prepared article at Canton have ever seen from what it is made.

I am, Sir, &c. &c.

A. Aikin, Esq.
Secretary, &c. &c.

J. Reeves.

ORIGINAL.

To Miss E. F. Haworth, Barham-wood, Elstree, Herts, for an original historical miniature, the Gold Isis Medal.

To Miss M. Jones, 8, Coleman-street, for an original portrait in miniature, the Gold Isis Medal.

To Miss Mintorn, Woodfield Cottage, Bristol, for an original portrait in miniature, the large Silver Medal.

To Miss Witts, 8, Brunswick-square, for an etching of an animal, the large Silver Medal.

To Mrs. Jos. Stannard, St. Giles's, Norwich, for an original oil painting of dead game, the Gold Isis Medal.

ARTISTS.

Copies.

To Miss Chapman, 106, Great Russell-street, for a copy in water-colours of figures, the large Silver Medal.

To Mr. J. H. P. Stubbs, 28, Allsop's-buildings, New-road, for a copy of figures in pen and ink, the Silver Palette.

To Mr. J. Pasmore, 6, Salisbury-court, Fleet-street, for a copy in pencil of a head, the Silver Palette.

To Miss F. Riviere, 8, Cirencester-place, Fitzroy-square, for a copy in chalk of figures, the Silver Isis Medal.

To Mr. Jas. Walsh, 11, New Burlington-street, for a copy in water-colours of figures, the Silver Isis Medal.

To Miss Eliz. Setchell, 23, King-street, Covent-garden, for a copy in chalk of a head, the Silver Isis Medal.

To Miss L. Lyon, 22, Nassau-street, Cavendish-square, for a copy in miniature of a portrait, the large Silver Medal.

To Mr. J. Peake, 26, Clarendon-street, Somers-town, for a copy in pen and ink of a landscape, the Silver Palette.

To Miss L. Derby, 12, Osnaburgh-street, Portland-place, for a copy in pencil of a landscape, the Silver Isis Medal.

To Miss E. Crabb, Point Pleasant, Wandsworth, for a copy in water-colours of a landscape, the Silver Palette.

To Mr. C. F. Du Pasquier, St. James's Palace, for a copy in pencil of animals, the Silver Isis Medal.

To Mr. R. Shaw, 20, Hemming's-row, St. Martin's-lane, for a copy in pencil of animals, the Silver Palette.

DRAWINGS AND PAINTINGS FROM BUSTS AND STATUES.

To Mr. E. U. Eddis, 1, Barnsbury-street, Islington, for a drawing in chalk from a bust, the large Silver Medal.

To Mr. C. G. Hill, Queen-street, Golden-square, for a drawing in chalk from a bust, the Silver Isis Medal.

To Mr. J. White, 14, Brownlow-street, Holborn, for a painting from a bust, the large Silver Medal.

To Miss C. Derby, 12, Osnaburgh-street, Portland-place, for a painting in oil from a bust, the Silver Isis Medal.

To Mr. C. W. Cope, 45, Clarendon-square, Somers-town, for a finished drawing from a statue, the large Silver Medal.

To Mr. A. H. Taylor, 3, Lower Stamford-street, Black-friars, for a finished drawing from a statue, the Silver Palette.

ORIGINAL.

To Mr. Ed. Hassell, 12, Upper Belgrave-place, Pimlico, for a painting in oil of the altar-piece of St. Margaret's Church, the Silver Palette.

To Mr. A. R. Slous, 6, Bayham-street, Camden-town, for an original historical composition in water-colours, the large Silver Medal.

To Mr. J. W. Solomon, 8, King-street, Covent-garden, for an original historical composition in oil, the large Silver Medal.

To Mr. D. Pasmore, 6, Salisbury-court, Fleet-street, for an original group of portraits in miniature, the Gold Isis Medal.

To Miss L. J. Green, 8, South-crescent, Bedford-squ. for an original portrait in miniature, the Gold Isis Medal.

To Miss Alabaster, 58, Piccadilly, for an original portrait in oil, the Gold Isis Medal.

To Mr. James Y. Gant, 54, Greek-street, Soho, for an original portrait in oil, the large Silver Medal.

To Mr. W. H. Freeman, 2, Stanhope-str. Clare-market, for an original landscape in oil, the large Silver Medal.

To Mr. C. Marshall, 24, Everett-street, Brunswick-square, for an original landscape in oil, the Gold Isis Medal.

To Mr. W. R. Patterson, 2, Broadway, Westminster, for an original marine painting in oil, the large Silver Medal.

To Mr. A. G. Vickers, 8, Barton-street, Westminster, for an original marine painting in oil, the Gold Isis Medal.

To Mr. W. A. Crabb, Point Pleasant, Wandsworth, for an original oil painting of flowers, the large Silver Medal.

To Miss L. A. Shaw, Stonehouse, Plymouth, for an original painting in oil of fruit and flowers, the Gold Isis Medal.

To Mr. L. Wells, 2, Stanhope-street, Clare-market, for an original oil painting of still-life, the large Silver Medal.

To Mr. E. Lee, 26, Newland-street, Kensington, for an original historical composition in Indian ink, the Silver Isis Medal.

MODELS AND CARVINGS.

To Mr. J. Mason, Twickenham, for a model of a bust from life, the large Silver Medal.

To Mr. H. Hogan, 12, Park-street, Dorset-square, for a copy in plaster of an architectural ornament, the large Silver Medal.

To Mr. H. Bailes, 434, Oxford-street, for an original group of figures carved in wood, the large Silver Medal.

To Mr. S. Briant, 34, Monmouth-street, for his model of St. Clement's Church, the Silver Isis Medal and 5*l.*

ARCHITECTURE.

To Mr. R. Stokes, 29, Lower Brook-street, Grosvenor-square, for a drawing in perspective from a Corinthian capital, the large Silver Medal.

To Mr. R. Garland, 13, Gray's-inn-terrace, for a drawing in perspective from a Corinthian capital, the Silver Isis Medal.

To Mr. T. J. Kilpin, 6, Orchard-street, Kingsland-road, for an original design for a Gothic cathedral, the large Silver Medal.

GEM ENGRAVING.

To Mr. C. Durham, 17, Arundel-street, Strand, for an engraving in intaglio of a head, the Gold Isis Medal.

LAYTON COOKE.

A Series of Statistical Charts. By Layton Cooke, Esq.

W. FITTON, M.D.

Address delivered at the Anniversary Meeting of the Geological Society by Dr. Fitton.

GEOLOGICAL SOCIETY.

The Transactions of the Geological Society. Vol. II. Parts 1 and 2. New Series. 4to.

THOMAS GILL.

The Technological Repository, in continuation. 8vo.

JAMES HARRISON.

Three Plans of the intended Improvements at Charing Cross.

HIGHLAND SOCIETY.

The Journal of Agriculture, comprehending the Transactions of that Institution. 8vo.

SIR WILLIAM HILLARY.

First Annual Report of Man District Association for the Preservation of Life from Shipwreck. 8vo.

HORTICULTURAL SOCIETY.

The Transactions of the Horticultural Society. No. 2, Vol. VII. 4to.

Catalogue of Fruits cultivated in their Garden. 8vo.

JOSEPH HOULTON.

Formulary for the Preparation and Employment of several New Remedies, &c. 12mo.

SAMUEL B. HOWLETT.

A Treatise on Perspective, &c. By Samuel B. Howlett. 8vo.

JOSEPH HUME, M.P. V.P.

Various Parliamentary Papers, as recorded in the new Catalogue of the Society's Library.

IMPERIAL ACADEMY OF ST. PETERSBURGH.

Their Memoirs. Vol. X. 4to.

Proceedings at the Centennary Anniversary of the Academy. 4to.

Greek Ode on the same occasion. Folio.

ANTIDE JANVIER.

Recueil des Machines composées et exécutées par Antide Janvier, Horloger Ordinaire du Roi. 4to.

WILLIAM KIRKBY.

A Print of an antique Seal.

JOHN LINGARD.

A Philosophic and Practical Inquiry into the Nature and Constitution of Timber, &c. By John Lingard, Esq. 8vo.

LINNÆAN SOCIETY.

The Transactions of the Linnæan Society. Part 2, Vol. XV. 4to.

MEDICO-BOTANICAL SOCIETY OF LONDON.

An Oration delivered before the Medico-Botanical Society of London, at the commencement of their Eighth Session. By John Frost, F.A.S., F.L.S., F.H.S., of Emmanuel College, Cambridge. 4to.

The By-Laws of that Institution.

A MEMBER.

Gilbertus de Magnete.

CESAR MOREAU.

The Past and Present Statistical State of Ireland, in a Series of Tables. By Cesar Moreau.

Chronological Records of British Finance. By Cesar Moreau.

A Table of the Commerce of Great Britain. By Cesar Moreau.

WILLIAM NEWTON.

The London Journal of Arts and Sciences, in continuation. 8vo.

JOHN INGLISH NICOL, M.D.

Laws of the Northern Institution for the Promotion of Science, &c. at Inverness. 8vo.

Essay on the Treatment of Caries. By John Inglish Nicol, M.D. 8vo.

Prize Essay on the State of Society and Knowledge in the Highlands of Scotland. By John Anderson. 8vo.

WILLIAM PITTS.

Outlines from Virgil's Æneis. No. 1. Folio.

PORTSMOUTH AND PORTSEA LITERARY AND PHILOSOPHICAL SOCIETY.

Report of the Committee, 1826–27. (A pamphlet.)

PROFESSOR SILLIMAN, M.D.

The American Journal of Science and Arts. No. 2, Vol. XII.; and Nos. 1 and 2, Vol. XIII. 8vo.

ROYAL ASIATIC SOCIETY.

The Transactions of the Royal Asiatic Society. Vol. I. Part 3. 4to.

Report from the Oriental Translation Fund.

ROYAL ECONOMICAL SOCIETY OF DRESDEN.

The Transactions of the Royal Economical Society of Dresden for 1827-8. 8vo.

ROYAL INSTITUTION.

The Quarterly Journal of Science. Nos. 3, 4, and 5. New Series. 8vo.

ROYAL PRUSSIAN ECONOMICAL SOCIETY OF POTSDAM.

The Transactions of the Royal Prussian Economical Society of Potsdam for 1825 and 1826. 2 vols. 8vo.

WILLIAM SEYMOUR.

Report of a Committee of Magistrates as to the State of the Pauper Lunatics of Middlesex.

Analysis of the Pauper Lunatic Returns.

Statement shewing where the Pauper Lunatics are confined or kept.

Instructions and Suggestions for such Architects, Surveyors, and others, as may be willing to submit Plans and Estimates respecting a Lunatic Asylum for Middlesex, pursuant to advertisement.

EDWARD SKEGG, JUNIOR.

Sherwood Forest, a Poem. 12mo.

SOCIETY OF ANTIQUARIES.

Archæologia, Vol. XXI. Part 2. 4to.

R. H. SOLLY.

Engraving from Mulready's painting of the Wolf and Lamb.

MAXIMILIAN VON SPECK.

Verzeichniss der von Speckschen Gemälde Sammlung mit dar auf Beziehung habenden Steindrücken. Folio.

SUSSEX, HIS ROYAL HIGHNESS THE DUKE OF, PRESIDENT.

Bibliotheca Sussexiana. 2 vols. royal 8vo.

RICHARD TAYLOR.

A Calendar of the Days of Meeting of the various Scientific Societies in London.

WILLIAM TOOKE, V.P.

The British Almanac for 1828.
The Companion to ditto.

WILLIAM VAUGHAN.

Notes in Defence of the Colonies. By a West Indian. 8vo.

W. L. VULLIAMY.

Some Considerations on the subject of Public Clocks, particularly Church Clocks, &c. 4to.

HENRY WILKINSON.

A short Treatise on the Elastic Concave Wadding invented by J. Wilkinson and Son. 4to.

RICHARD WILLIAMSON.

A Proof Impression of an Engraving of the Interview between King Henry VIII. and Anne Bullen.

W. WITHERS.

A Letter to Sir Walter Scott, Bart. on his Essay on the Planting of Waste Land. By W. Withers.

JAMES WOOD.

Cornwall Collegiate Institution. 8vo.
Almanacs of New South Wales for 1826–7.

THOMAS WOODFALL (*Assistant Secretary*).

Poems on various subjects. By John Taylor, Esq. 2 vols. 8vo.

YORKSHIRE PHILOSOPHICAL SOCIETY.

The Report of the Yorkshire Philosophical Society for 1827.

ZOOLOGICAL SOCIETY.

An engraved Plan of their Garden in the Regent's Park.

The following articles have been received from Mr. H. L. Maw, Lieut. R. N., collected by him in his journey, partly by land partly by water, down the Maranon, from its sources in the Andes of Peru to its mouth. Several of the substances enumerated in the annexed list are now under examination, and will probably be reported on in the next volume of Transactions: —

Red Fecula, prepared from the leaves of a large tree, the Bignonia chica, of Humboldt, from the Rio Negro.
Indigo, from the Rio Negro.
Seed vessel of the Bixa orellana, which produces Annatto; in powder.
Vanilla (probably of at least two species), from Pevas in Peru, and other places.
Tonquin Beans, from the Rio Negro.
Cinnamon? from the Rio Negro.
Tobacco, from Moyabamba.
Sarsaparilla, from Laguna and from Guallaga.
Sassafras Nuts (Putuchere), from the Rio Negro.
Cocoa, wild, from Ucayal and Guallaga.
Coffee, from Moyabamba.
Cotton, wild and cultivated, from Ucayal, Moyabamba, and Cochiquenas.
Balsam of Capivi, from Moyabamba.
A poisonous root, used by the Indians of Laguna for taking fish.
Together with several unknown barks, seeds, and resins.

A

CATALOGUE

OF THE

MODELS, MACHINES,

&c. &c.

RECEIVED SINCE THE PUBLICATION OF THE FORTY-FIFTH VOLUME OF TRANSACTIONS.

IN CHEMISTRY AND MINERALOGY.

Mr. George Jackson's Apparatus for Instantaneous Light. See page 11.

IN MECHANICS.

Mr. James Dowie and Mr. Alexander Black's Instrument for the use of Boot and Shoe-makers. See page 19.

H. W. Hood, Esq. (Commander R.N.) his Floating-Bridge. See page 29.

C. H. Ackerley, Esq. (Lieutenant R.N.) his Safety-Rods for Ships' Boats. See page 33.

John Higgins, Esq., his Revolving Light for Steam-vessels. See page 41.

Mr. W. H. Hilton's Ladder-Crane. See page 44.

Mr. Alexander Bain's Movable Stamps for Book-binders. See page 46.

Mr. L. Hebert's Application of Prepared Plumbago instead of Oil for Chronometers. See page 48.

Mr. Robert May's Detached Escapement. See page 54.

Mr. William Melvine's Detached Escapement for Chronometers. See page 58.

Mr. T. Judge's Self-Adjusting Pendulum. See page 62.

Mr. Robert Mottershead's Expanding Piston for High-pressure Steam-Engines. See page 64.

Mr. Andrew Smith's Lever Cramp. See page 105.

Mr. T. Chapman's Carriage for Mr. Palmer's Patent Railway. See page 109.

Mr. J. Castell's Duplex Cock for Bottling Wine. See page 111.

Mr. T. E. Bonner's Safe Lock. See page 114.

Mr. G. Gibson's Spoon for Administering Medicine. See page 117.

J. P. Holmes, Esq. his improved Obstetrical Instruments. See page 118.

IN MANUFACTURES.

Mr. R. Lloyd's Sheet Cork. See page 128.

C. T. Tower, Esq. samples of Cashmere Wool.

IN COLONIES AND TRADE.

Mr. W. Green's specimens of Pigments from Canada.

Mr. I. P. Holmes Midwifry Instruments.

Mr. Gibson's Physic spoon.

Mr. Jackson's apparatus for instantaneous &c.

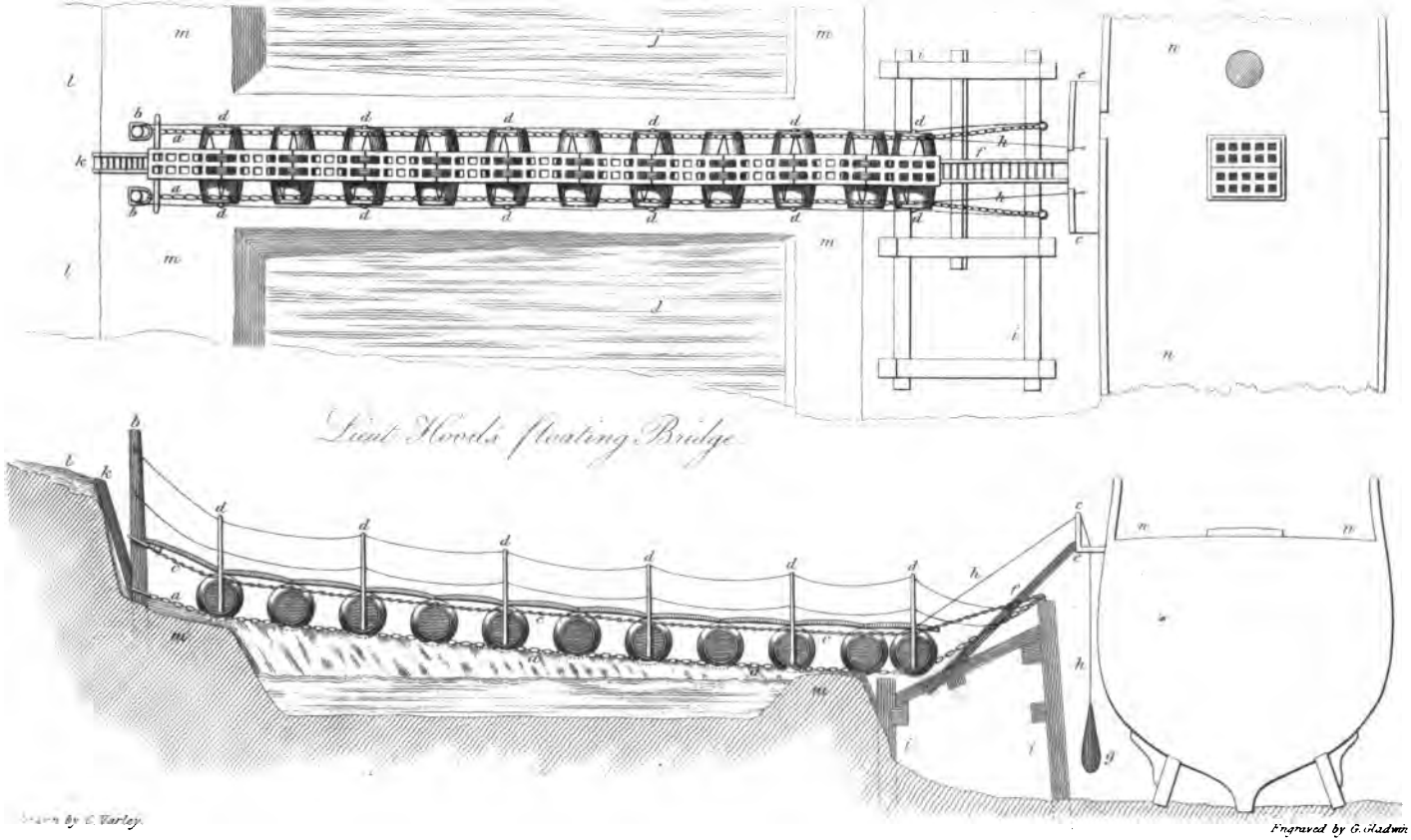
Lieut Hood's floating Bridge
Drawn By C. Varley.
Engraved by G. Gladwin.

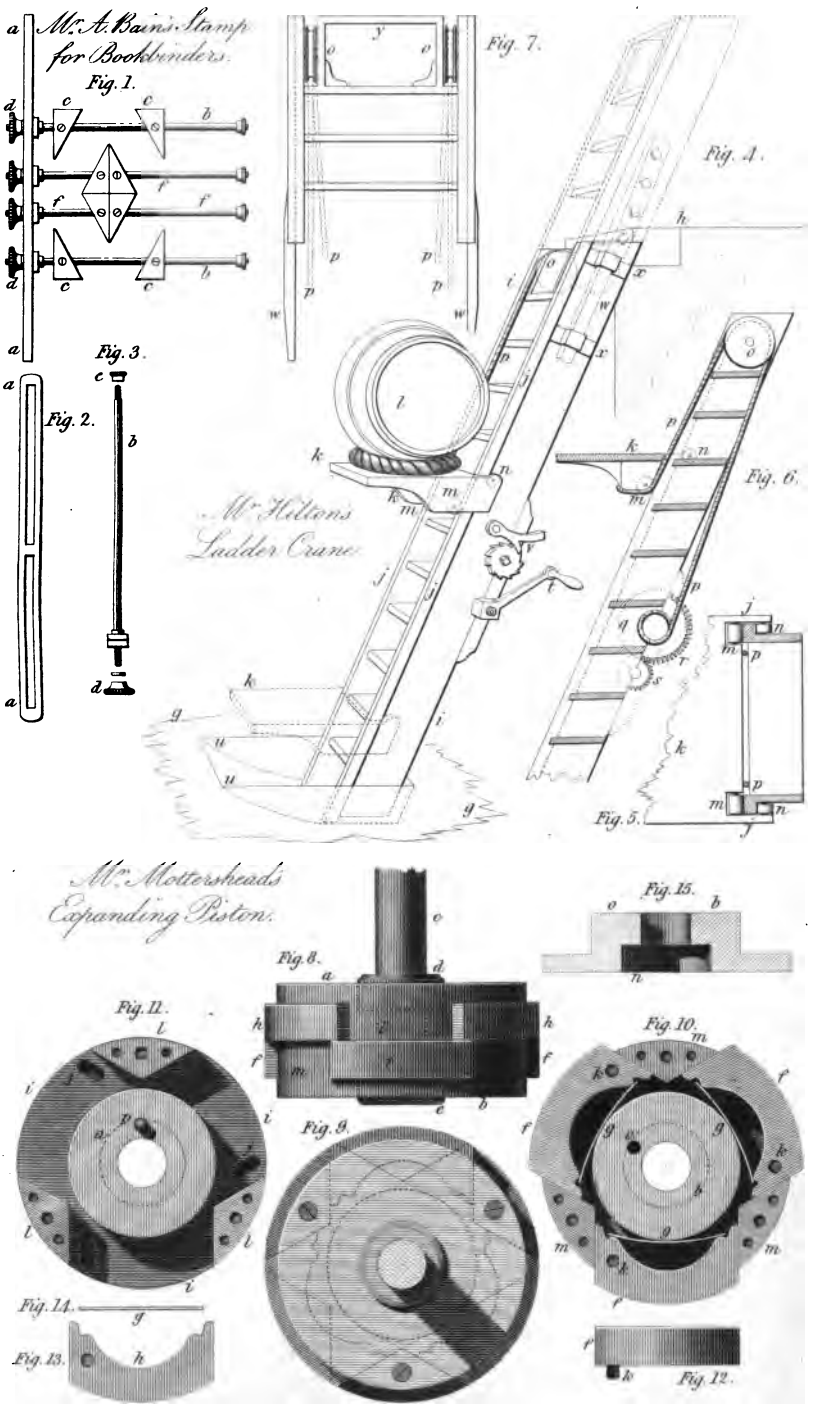

Drawn by C. Varley.

Engraved by G. Gladw.

Mr. Castelli's cock for bottling Wine.

Fig. 12.

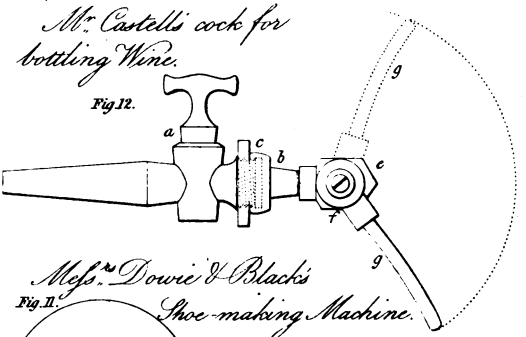

Fig. 13.

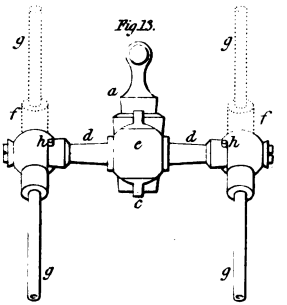

Messrs. Dowie & Black's Shoe-making Machine.

Fig. 11.

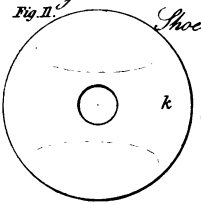

Fig. 1.

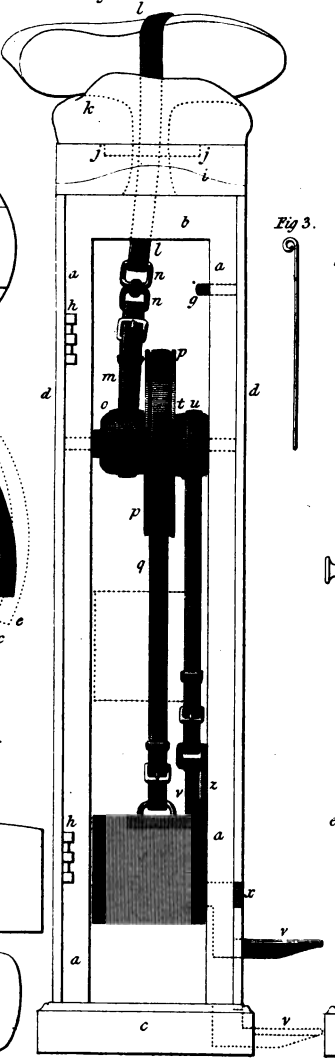

Fig. 2.

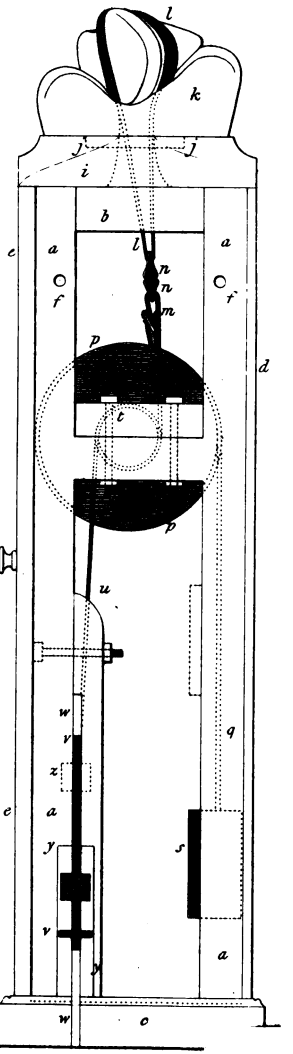

Fig. 5.

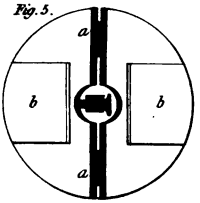

Fig. 3.

Fig. 4.

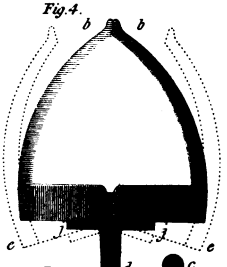

Fig. 8.

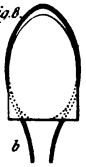

Fig. 6.

Fig. 7.

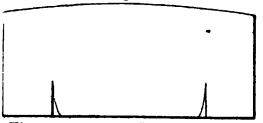

Fig. 10.

Fig. 9.

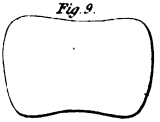

Drawn by C. Varley.

Engraved by

Mr. Andw. Smith's Lever Cramp.

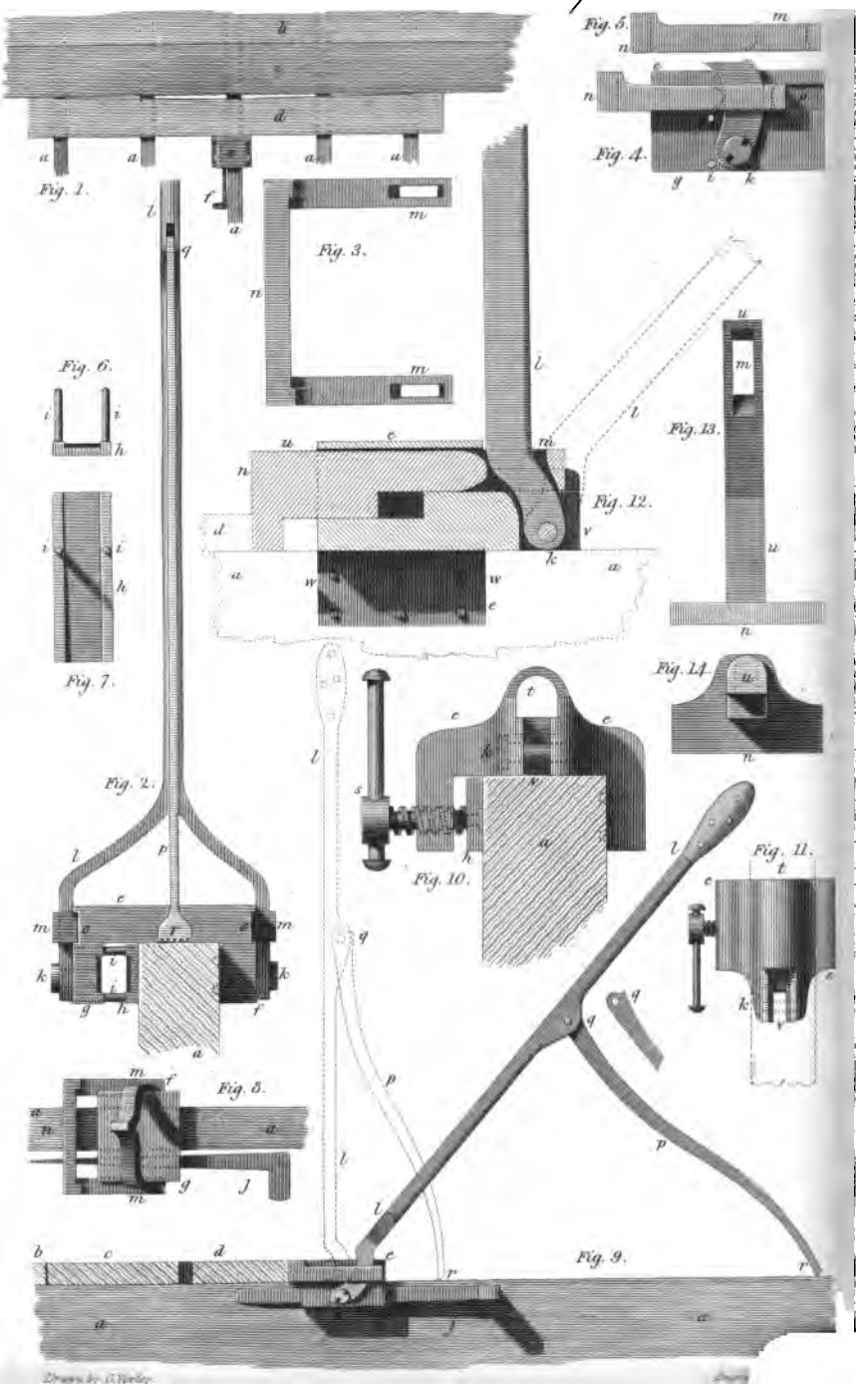

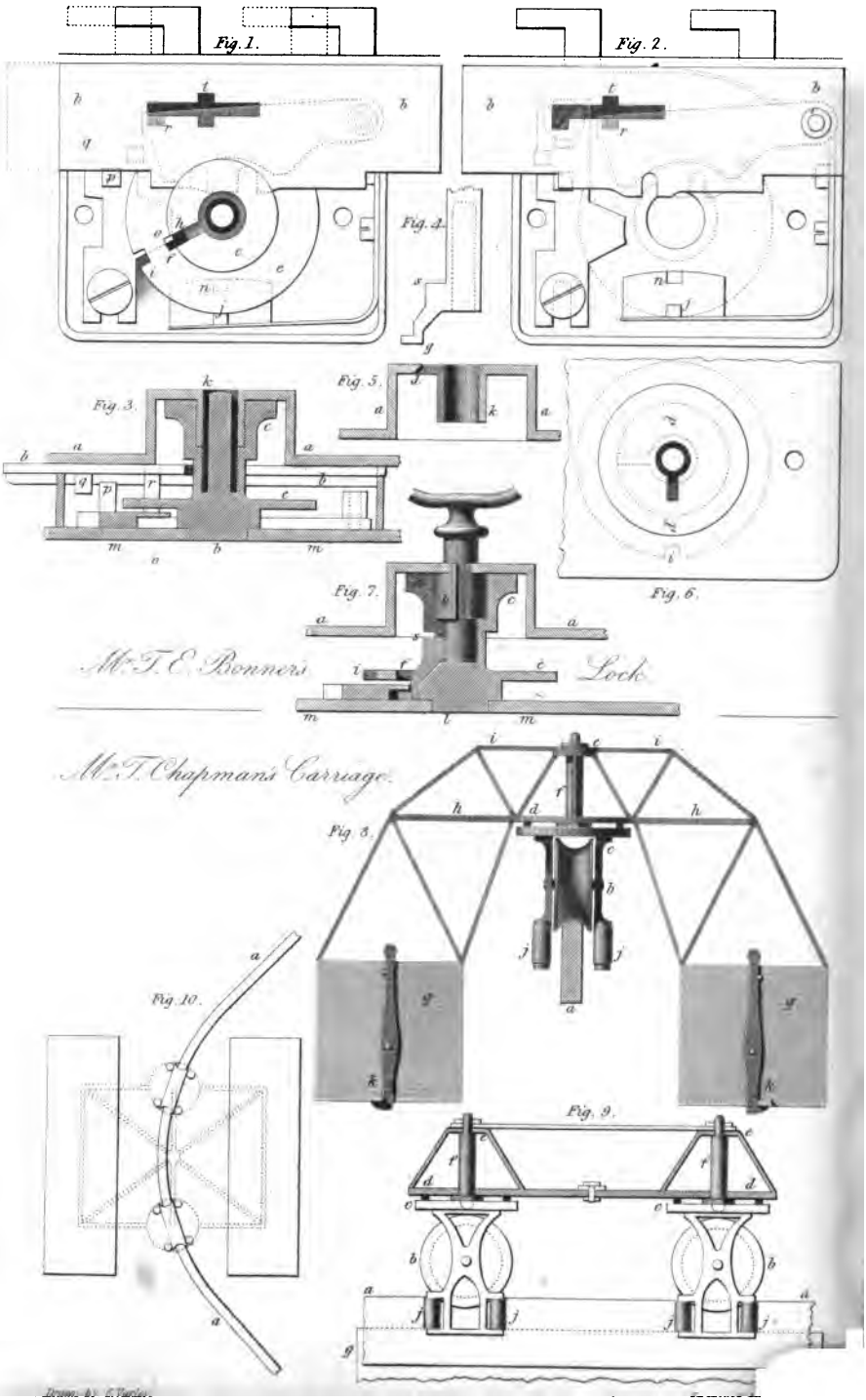
Fig. 1.
Fig. 2.
Fig. 3.
Fig. 4.
Fig. 5.
Fig. 6.
Fig. 7.
Mr. T. E. Bonner's Lock.
Mr. T. Chapman's Carriage.
Fig. 8.
Fig. 9.
Fig. 10.

Plate X.

Fig. 2.

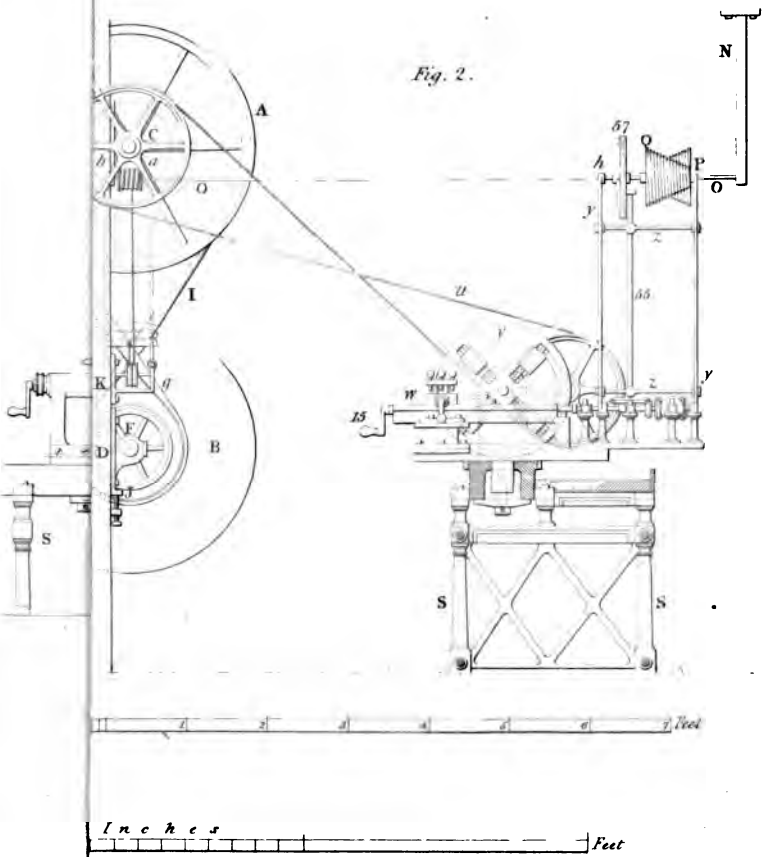

Fig. 4.

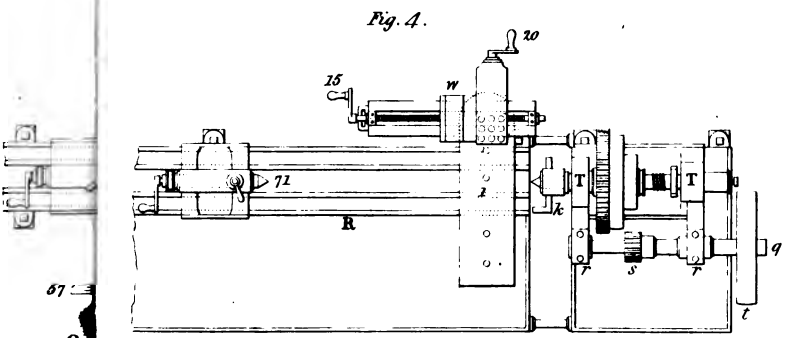

Drawn by J

Engraved by W

Mr. Castell's cock for bottling Wine.

Fig. 12.

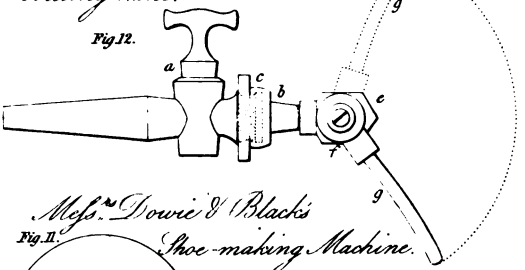

Fig. 13.

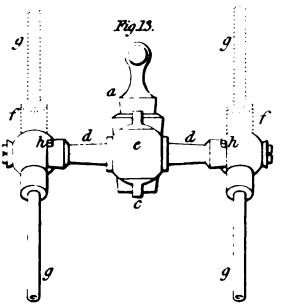

Messrs. Dowie & Black's Shoe-making Machine.

Fig. 11.

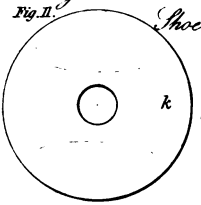

Fig. 1.

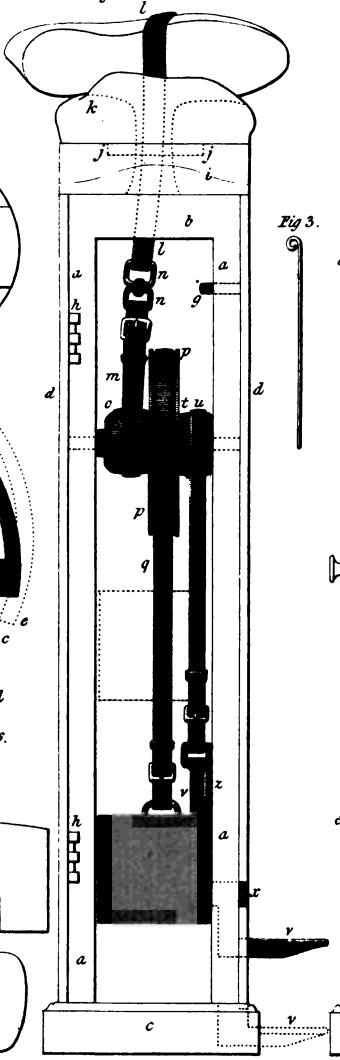

Fig. 2.

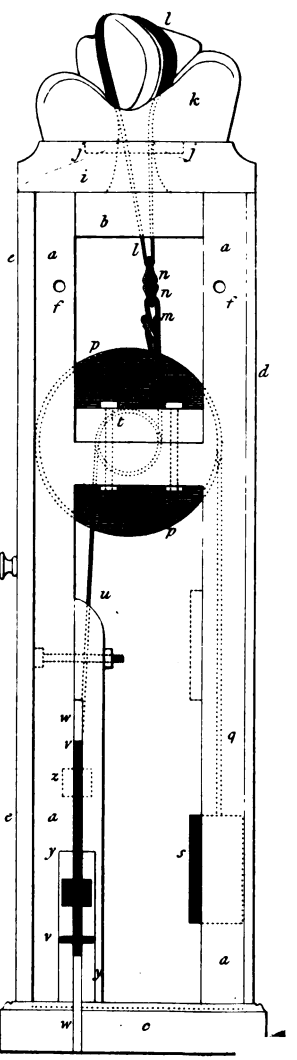

Fig. 3.

Fig. 5.

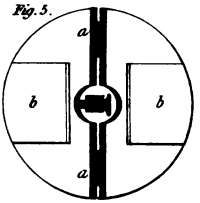

Fig. 4.

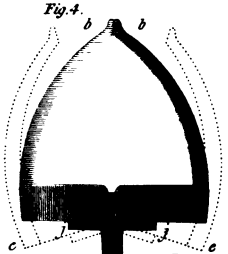

Fig. 8.

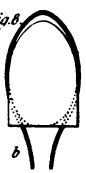

Fig. 6.

Fig. 7.

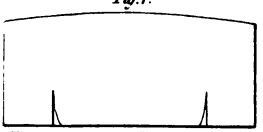

Fig. 10.

Fig. 9.

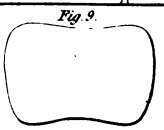

Drawn by C. Varley.

Engraved by E. I.

Mr. And.w Smith's Lever Cramp.

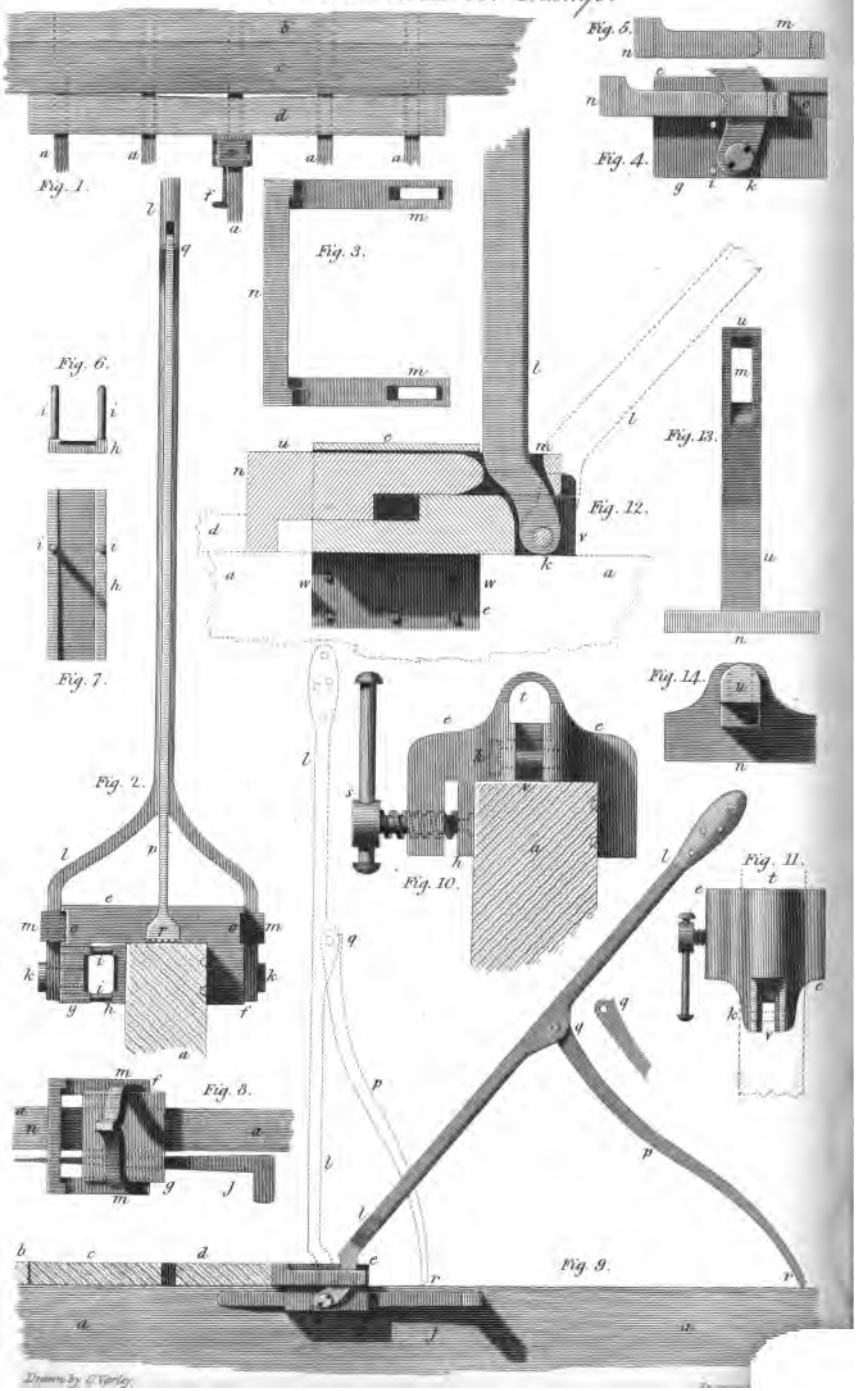

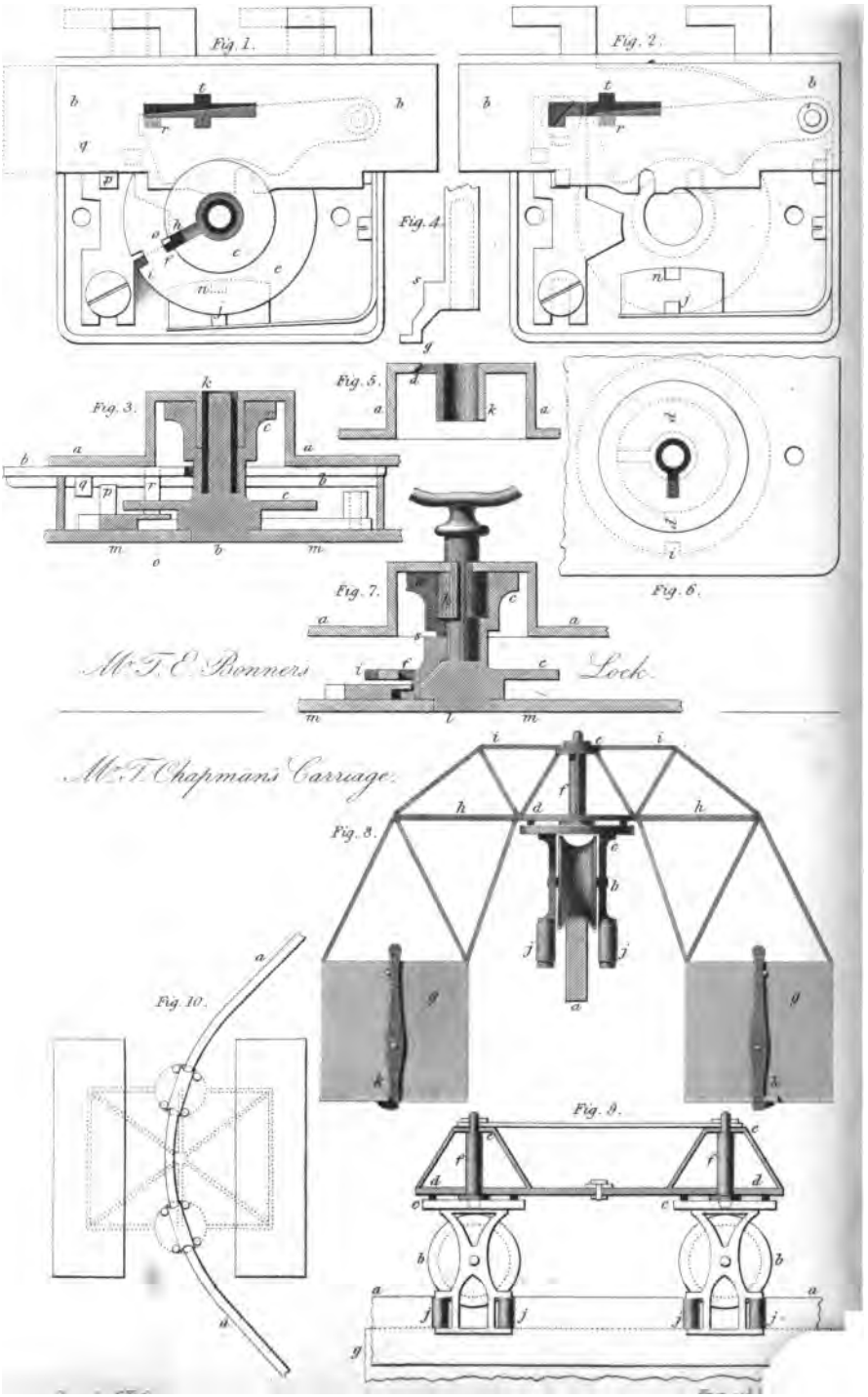
Fig. 1.
Fig. 2.
Fig. 3.
Fig. 4.
Fig. 5.
Fig. 6.
Fig. 7.
Mr. T. E. Bonners Lock.
Mr. T. Chapman's Carriage.
Fig. 8.
Fig. 9.
Fig. 10.

Plate X.

Fig. 2.

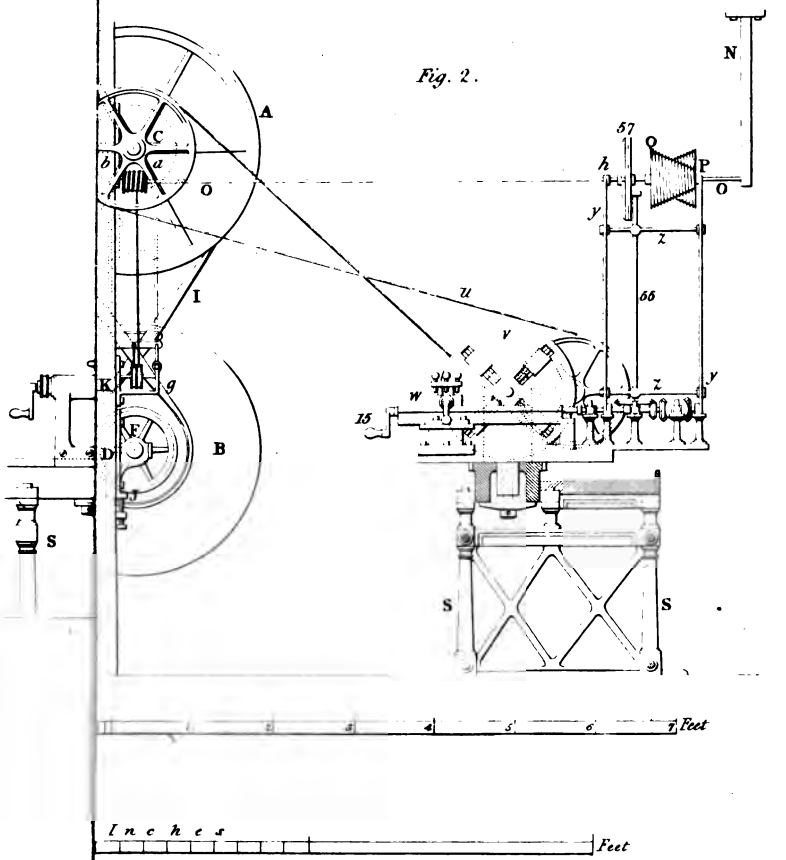

Fig. 4.

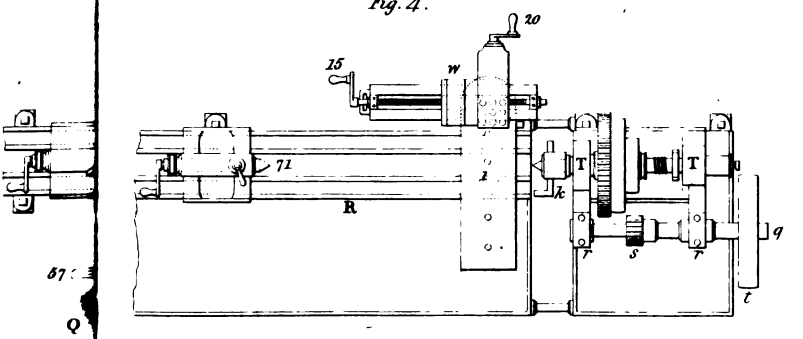

Drawn by

Engraved by

Fig. 1.

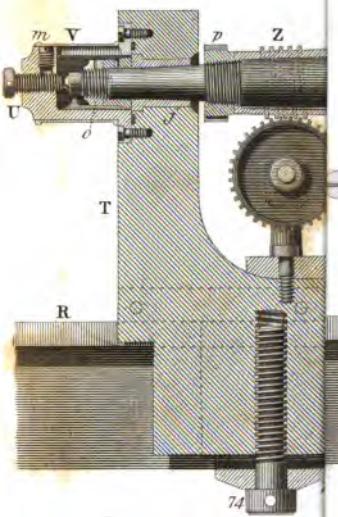

Fig. 1. b.

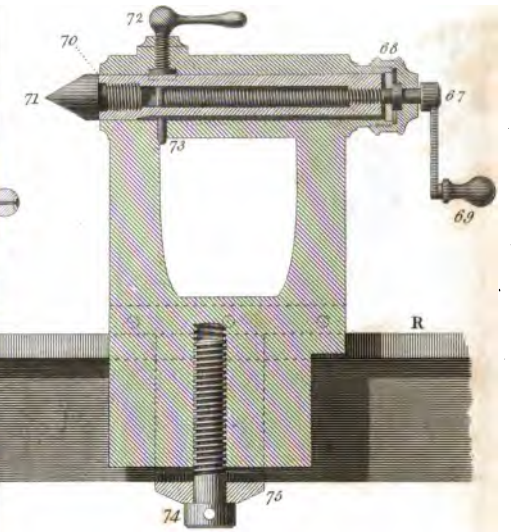

Fig. 3.

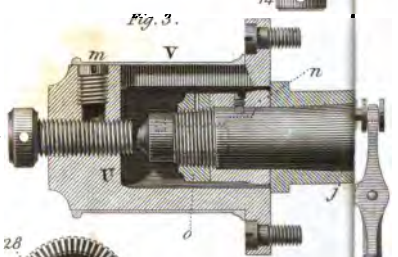

Fig. 6.

Fig. 11.

Fig. 9.

Fig. 10.

Fig. 4.

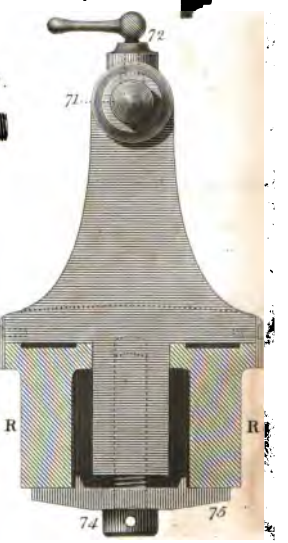

28
30
38
26
37
Fig. 2.
27
25
65

Fig. 7.

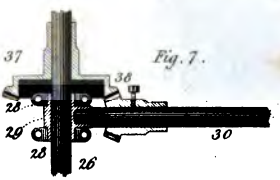

12 3 Feet.

Drawn by J. Clement.

Engraved by

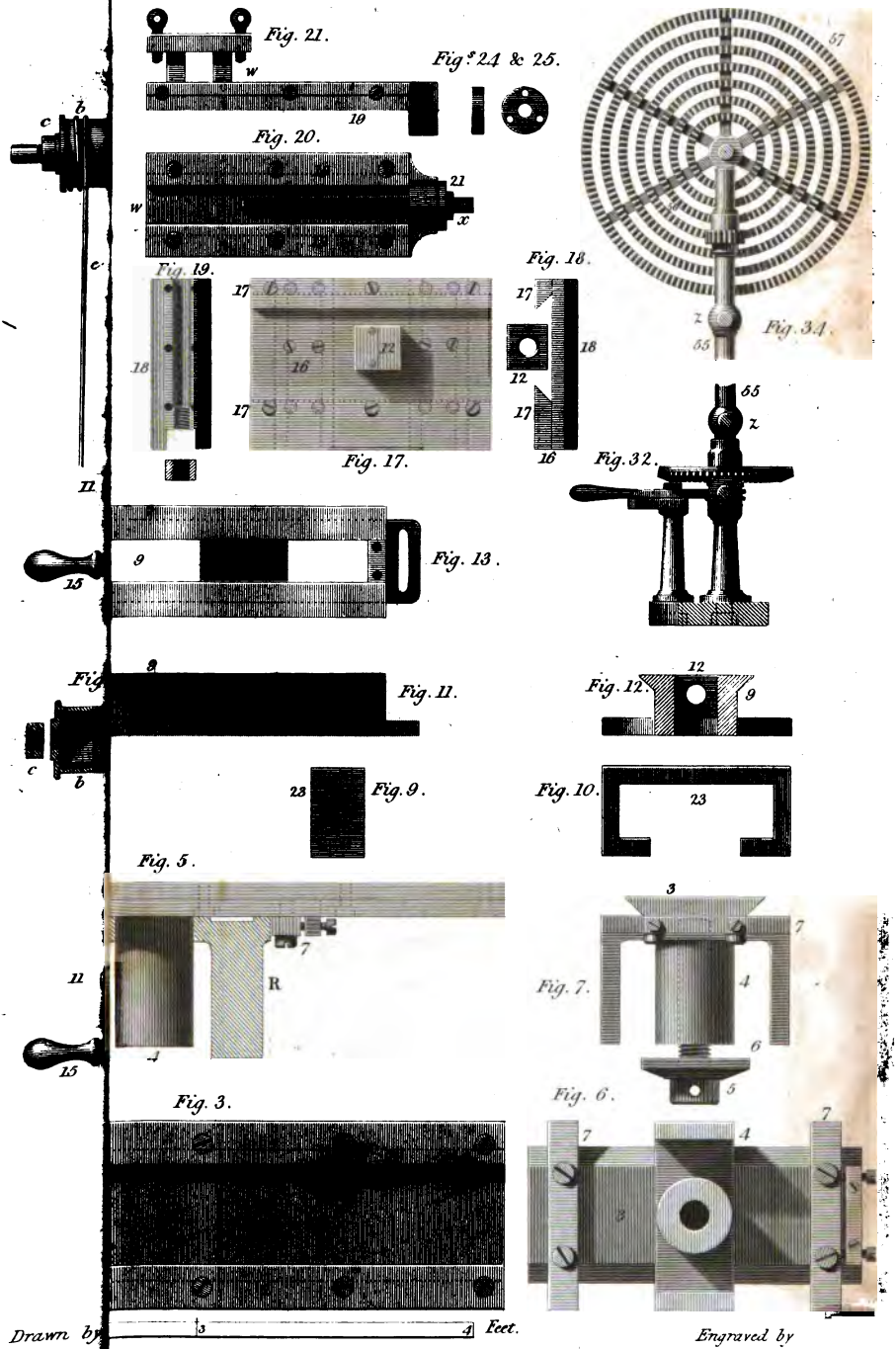

Drawn by

Engraved by

1
2
3
4
5
6
7
8
9

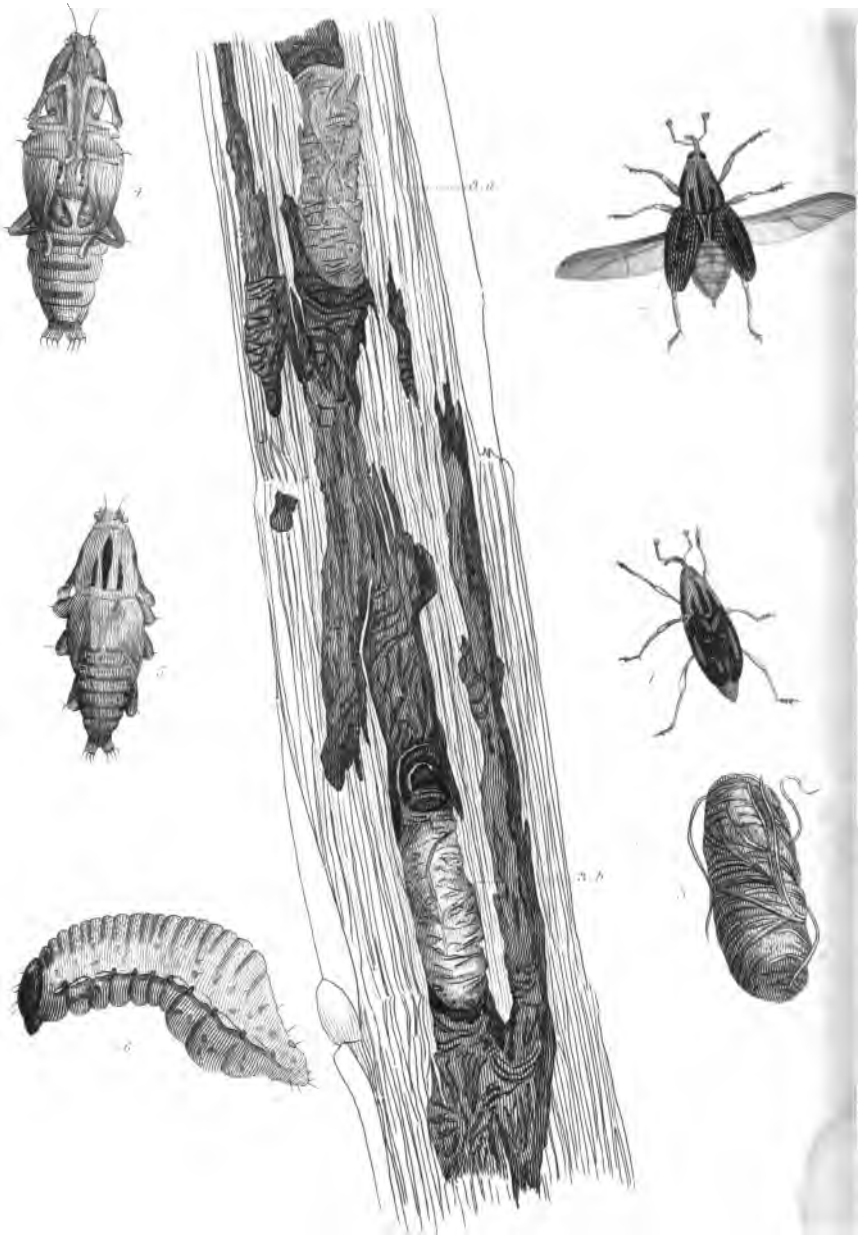

CALANDRA SACCHARI.

Revd L. Guilding del.

W. Fox

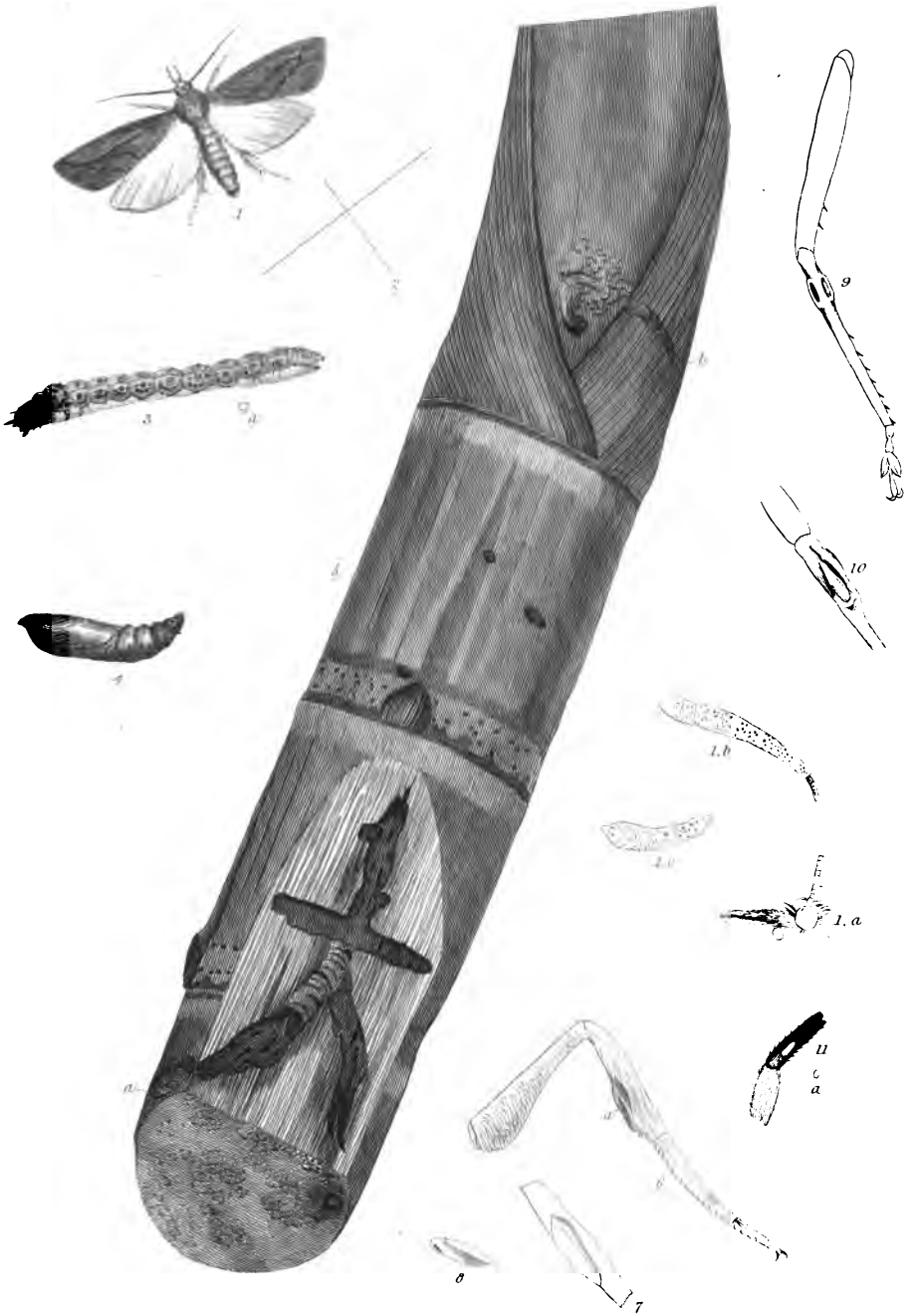

DIATREA SACCHARI.

Revd L. Guilding del.

W. Raddon sc.

INDEX.

A

ACKERLEY, C. H., Lieut. R.N., the large silver medal to, for his safety-rods for ships' boats, xxv., — his communication respecting, 33.

Advertisement, general, describing the objects of the Society, — the meetings of the Society,—the form for proposing members, — ladies being eligible as members, to vote by proxy at elections, — members entitled to vote and assist in the business of the Society, — their privilege of recommending two persons as visitors at the meetings of the Society, and introducing their friends to examine the various models, &c., iii.;— members to have the use of the Society's library, — invitation to members and others to augment the library by contributions,—form offered to persons inclined to leave money to the Society by will, — the Society not responsible for any opinion or representation of facts contained in their volumes, — the public requested to guard against impositions from persons advertising as having patents for articles sold under the pretended sanction of the Society's name, — Society's publications, — manner of communicating, iv.

Agriculture, when communications are to be sent, vi., — premiums in, vi. vii., — papers in, 1 to 10.

Alabaster, Miss, the gold Isis medal to, for an original portrait, &c., 158.

Appendix, 161.

—— containing papers on,

I. British Leghorn,

II. Archil test paper, 162.

III. Italian plat-wheat grown in England, 162.

IV. Animal and vegetable specimens preserved in brine, 163.

V. Rice paper, 164.

B

Baile's, Mr. H., the large silver medal to, for an original group of figures carved in wood, 159.

Bain, Mr. Al., the silver Isis medal and £5 to, for his movable stamps for book-binders, xxv.

Beaumont, Mr. Al., the silver Isis medal to, for a copy in pen and ink of figures, 154.

Black, Mr. Al., the silver Isis medal to, for an improved machine for the use of boot and shoe-makers, xxv.,—communication respecting, 19.

Blair, Miss E., the large silver medal to, for a copy in chalk, &c., 155.

Blaxland, Greg., Esq., the gold Ceres medal to, for wine, the produce of New South Wales, xxviii.,—his communication respecting, 133.

Bonner, Mr. T. E., the silver Isis medal to, for his door-lock, xxv.,—his communication respecting, 114.

Boot and shoe-makers, two silver Isis medals to Mr. James Dowie and Mr. Al. Black, for their improved machine for, xxv.

Briant, Mr. S., the silver Isis medal and £5 to, for his model of St. Clement's church, 159.

Burnell, Miss F., the silver palette to, for a copy in chalk, &c., 154.

C

Candidates, general notice to, v.

Castell, Mr. J., the large silver medal to, for his improved cock for bottling wine, xxv.,—his communication respecting, 111.

Catalogue of the models, machines, &c. &c. received since the publication of the forty-fourth volume of Transactions, 175.

Chapman, Miss, the large silver medal to, for a copy in water colours of figures, 156.

——— Mr. T., the silver Isis medal and £5 to, for his carriage for Mr. Palmer's railway, xxv.,—his communication respecting, 109.

Chemistry and mineralogy, when claims for premiums in this department are to be sent in, vii.,—premiums in, vii. to xi.,—papers in, 11 to 18.

Clement, Mr. Jos., the gold Isis medal to, for his improved turning-lathe, xxv.,—his communication respecting, 67.

Cock for bottling wine, Mr. J. Castell's improved, xxv.

Cogan, Mr. T., the silver Isis medal and £10 to, for his method of purifying oils, xxv.,—his communication respecting, 15.

Colonies and Trade, when claims for premiums in are to be sent, xxi.,—premiums in, xxi. to xxiv.,—Papers in, 133 to 153.

Contents, xxxiii.

Cope, Mr. C. W., the large silver medal to, for a finished drawing, &c., 157.

Corboux, Miss L., the silver Isis medal to, for a copy in chalk, &c., 155.

Corrigenda, 187.

Crabb, Mr. W. A., the large silver medal to, for an original oil painting of flowers, 158.

——— Miss E., the silver palette to, for a copy in water colours of a landscape, xxvii.

Crane, ladder, the large silver medal to Mr. W. Hilton, for his, xxv.

Crutwell, Miss M. H., the silver Isis medal to, for a copy in chalk, &c., 154.

D

Derby, Miss C., the silver Isis medal to, for a painting in oil, &c., 157.

——— Miss L., the silver Isis medal to, for a copy in pencil of a landscape, 157.

Dowie, Mr. James, the silver Isis medal to, for an improved machine for the use of boot and shoe-makers, xxv.,—communication respecting, 19.

Door-lock, the silver Isis medal to Mr. T. E. Bonner, for his, xxv.

Du Pasquier, Mr. C. F., the silver Isis medal to, for a copy in pencil of animals, 157.

Durham, Mr. C., the gold Isis medal to, for an engraving in intaglio of a head, 159.

Dyer, Miss E. A., the silver Isis medal to, for a copy in miniature, 155.

E

Eddis, Mr. E. U, the large silver medal to, for a drawing in chalk, &c., 157.

Eggbrecht, Miss J., the silver palette to, for a drawing in chalk, 155.

Escapement, detached, for chronometers, the large silver medal to Mr. W. Melvine, for his, xxv.

——— ——— for watches, the large silver medal and £5, to Mr. R. May, for his, xxv.

F

Finlayson, Mr. R., the large silver medal to, for a copy in water-colours, &c., 154.

Floating-bridge, the large silver medal to H. W. Hood, Esq. for a, xxv.

Freeman, Mr. W. H., the large silver medal to, for an original landscape in oil, 158.

G

Gant, Mr. Jas. Y., the large silver medal to, for an original portrait in oil, 158.

Garland, Mr. R., the silver Isis medal to, for a drawing in perspective from a Corinthian capital, 159.

Gibson, Mr. C., the silver medal to, for his spoon for administering medicine, xxv., — his communication respecting, 117.

Green, Miss L. J., the gold Isis medal to, for an original portrait, &c., 158.

——— W. Esq., the gold Isis medal to, for pigments, the produce of Canada, xxviii.,—his communication respecting, 135.

Guilding, the Rev. L., the gold Ceres medal to, for his communication respecting the insects which infest the sugar-cane, xxviii.,—his communication respecting, 143.

H

Hart, Mr. M. M., the large silver medal to, for engravings on wood, 160.

Hassell, Mr. E., the silver palette to, for a painting in oil, 158.

Haworth, Miss E. F., the gold Isis medal to, for a miniature, 156.

Hebert, Mr. L., the gold Isis medal to, for prepared plumbago, xxv.,—his communication respecting, 48.

Higgins, J., Esq., the large silver medal to, for his revolving lights for steam-boats, xxv., — his communication respecting, 41.

Hill, Mr. C. G., the silver Isis medal to, for a drawing in chalk, &c., 157.

Hilton, Mr. W. H., the large silver medal to, for his ladder-crane, xxv.,—his communication respecting, 44.

Hogan, Mr. H., the large silver medal to, for a copy in plaster of an architectural ornament, 159.

Holmes, J. P. Esq., the large gold medal to, for his obstetrical instruments, xxv.,—his communication respecting, 118.

Hood, H. W., Esq., the large silver medal to, for his floating-bridge, &c., xxv.,—his communication respecting, 29.

Houlton, Jos., Esq., the silver Ceres medal to, for introducing the roots of Stachys palustris as an esculent vegetable, xxv.,—his communication respecting, 8.

Hurlstone, Miss J. W., the large silver medal to, for a copy of flowers in water-colours, 155.

J

Jackson, Mr. George, the silver Isis medal to, for his apparatus for instantaneous light, xxv.,—his communication respecting, 11.

Jones, Miss M., the gold Isis medal to, for an original portrait, &c., 156.

Judge, Mr. T., the large silver medal and £5 to, for his self-adjusting pendulum, xxv.,—his communication respecting, 62.

K

Kilpin, Mr. T. J., the large silver medal to, for an original design for a Gothic cathedral, 159.

L

Leith, Miss J. W., the silver palette to, for a copy of a portrait, &c., 155.

Lee, Mr. E., the silver Isis medal to, for an original historical composition in Indian ink, 159.

Lester, Miss, the silver Isis medal to, for a copy of flowers in water-colours, &c., 155.

Lever-cramp, the silver Isis medal to Mr. And. Smith for his, xxv.

Light, instantaneous, the silver Isis medal to Mr. George Jackson for his apparatus for, xxv.

Lights, revolving, for steam-boats, the large silver medal to J. Higgins, Esq. for his, xxv.

List of plates, xxvi.

Lloyd, Mr. R., the silver Isis medal to, for his sheet-cork, xxviii., —his communication respecting, 129.

Lyon, Miss L., the large silver medal to, for a copy in miniature of a portrait, 157.

M

Manufactures, when claims for premiums in, are to be sent, xxviii., —premiums in, xviii., xix.,—papers in, 128 to 132.

Marbles, on exhibiting specimens of British, xxiv.

Marshall, Mr. C., the gold Isis medal to, for an original landscape in oil, 158.

Mason, Mr. J., the large silver medal to, for a model of a bust from life, 159.

May, Mr. R., the large silver medal and £5 to, for his watch-escapement, xxv.,—his communication respecting, 54.

Mechanics, when claims for premiums in, are to be sent, xix.,—premiums in, xix. to xxi.,—papers in, 19 to 127.

Members, contributing and corresponding, see list following Index.

Melvine, Mr. W., the large silver medal to, for his detached escapement for chronometers, xxv.,—his communication respecting, 58.

Mintorn, Miss, the large silver medal to, for an original portrait, &c., 156.

Mottershead, Mr. R., the large silver medal and £20 to, for his expanding piston for high-pressure steam-engines, xxv.,—his communication respecting, 64.

Moore, Mr. J. W., the silver Isis medal to, for a copy in pencil, &c., 155.

Murray, Miss, the large silver medal to, for a copy in oil, 155.

N

Newborough, Lord, the large gold medal to, for his plantations, xxv.,—his lordship's communication respecting, 1.

O

Obstetrical instruments, the large gold medal to J. P. Holmes, Esq., for his, xxv.

Officers of the Society, a list of the, ii.

Oils, purifying, the silver Isis medal and £10 to Mr. T. Cogan, for his method of, xxv.

P

Parker, Miss E., the silver Isis medal to, for a copy in water-colours, 155.

Pasmore, Mr. D., the gold Isis medal to, for an original group of portraits, &c., 158.

——, Mr. J., the silver palette to, for a copy in pencil of a head, 156.

Patterson, Mr. W. R., the large silver medal to, for an original marine painting in oil, 158.

Peake, Mr. J., the silver palette to, for a copy in pen and ink, 157.

Pendulum, self-adjusting, the large silver medal and £5 to Mr. T. Judge, for his, xxvi.

Phillips, Mr. J. S., the large silver medal to, for an engraving in cameo, &c., 160.

Plantations, the large gold medal to Lord Newborough for his, xxv.

Polite Arts, premiums in, xi. to xviii.,—conditions for the, xvii.

——— list of individuals to whom medals, for proficiency in various branches of, &c. were presented, 154.

Preface, v.

Premiums, i.

Presents received by the Society from Nov. 1827 to June 1828, 166.

Price, Mr. W., the silver palette to, for a copy in chalk, &c. 154.

Plumbago for lubricating chronometers, the gold Isis medal to Mr. L. Hebert, for, xxv.

R

Railway, the silver Isis medal and £5 to Mr. T. Chapman, for his carriage for Mr. Palmer's, xxv.

Rewards bestowed by the Society, &c., xx.

Riviere, Miss F., the silver Isis medal to, for a copy in chalk of figures, 156.

S

Safety-rods for ships' boats, the large silver medal to Lieut. C. H. Ackerley, R.N. for, xxv.

Setchell, Miss Eliz., the silver Isis medal to, for a copy in chalk of a head, 156.

Shaw, Mr. R., the silver palette to, for a copy in pencil of animals, 157.

——, Miss L. A., the gold Isis medal to, for an original painting in oil of fruit, &c., 159.

Slous, Mr. A. R., the large silver medal to, for an historical composition, &c., 158.

Smith, Mr. Andrew, the silver Isis medal to, for his lever-cramp, xxv.,—his communication respecting, 105.

Solomon, Mr. J. W., the large silver medal to, for an original historical composition in oil, 158.

Spoon for administering medicine, the silver medal to Mr. C. Gibson for his, xxv.

Stachys palustris, the silver Ceres medal to Jos. Houlton, Esq., for introducing the roots of, as an esculent vegetable, xxv.

Stamps, movable, for book-binders, the silver Isis medal and £5 to Mr. Al. Bain, for his, xxv.

Stannard, Mrs. Jos., the gold Isis medal to, for an original oil painting, 156.

Steam-engines, the large silver medal and £20 to Mr. Mottershead, for his expanding piston for high pressure, xxv.

Stokes, Mr. R., the large silver medal to, for a drawing in perspective, &c., 159.

Stubbs, Mr. J. H. P., the silver palette to, for a copy of figures in pen and ink, 156.

T

Taylor, Mr. A. H., the silver palette to, for a finished drawing, &c. 157.

Tower, C. T., Esq., the large gold medal to, for his flock of cashmere goats, &c., xxviii.,—his communication respecting, 129.

Turning-lathe, the gold Isis medal to Mr. Jos. Clement, for his improved, xxv.

V

Vickers, Mr. A. G., the gold Isis medal to, for an original marine painting, &c., 158.

U

Underwood, Mr. T., the silver Isis medal to, for a copy in pencil, &c., 154.

W

Walsh, Mr. James, the silver Isis medal to, for a copy in water-colours of figures, 156.

Welby, Miss L., the silver palette to, for a copy in pencil, &c., 155.

Wells, Mr. L., the large silver medal to, for an original oil painting, &c., 159.

White, Mr. J., the large silver medal to, for a painting, &c. 157.
Williams, Miss M. A., the silver palette to, for a drawing in chalk, &c., 155.
Wine from New South Wales, the gold Ceres medal to Gregory Blaxland, Esq., for, 133.
Wiggins, Miss, the silver Isis medal to, for a copy in Indian ink, 154.
—— Miss B. S., the large silver medal to, for a copy in water-colours, 155.
Witts, Miss, the large silver medal to, for an etching, &c., 156.

CORRIGENDA

IN VOL. XLV.

Page 52, *line* 20, *for* X *read* I
74, 7, *for* Wm. *read* T. M.
90, 8, *for* *l* *read* *j*
93, 24, *for* squares *read* layers
94, 1, *for* also, *read* , also
96. The following is a more correct description of Commander Hood's Ice-Saw: —

The action of the machine may be thus explained, premising that Fig. 1 is a side view, Fig. 2 a bird's-eye view, and Fig. 3 an end view. Suppose the lever *c c* to have been just moved from the horizontal position shewn by the dotted lines; in doing this it has elevated the end *k'* of the propeller, and has drawn its lower end along the ice: but although the lower end of the propeller may be advanced by the motion of the lever, it will not recede, because the angle which it makes with the horizon, and the relative positions of the centres of motion, cause the pointed claws at its lower end to enter the surface of the ice; the consequence is, that the lower end becomes a fixed point, when the end *d* of the lever *c c* is again elevated. The upper end *k'* of the propeller must therefore advance, carrying with it the frame of the machine and the saw; but the saw advances by an additional quantity equal to the versed sine of the angle described by the lever, the shorter arm being radius. The saw had, however, receded this quantity from its cut (as shewn by the dotted lines), when the end *d* of the lever *c c* was depressed; it has, therefore, considerable motion, and the advantage of much momentum in the weight *h*, before the teeth come in contact with the ice. The propeller may be jointed to the lever by either of the three holes in its upper end—a change in which will evidently alter the rate of progression.

Page 103, *line last*, *for* it *read* them
105, 14, *for* vii, *read* vi.
115, 5 *and* 6, *dele* at both ends, *and after* *p p* *insert* one at each end: these pipes
116, 4, *for* sufficient *read* an uninterrupted
121, 8, *for* at *read* above
124, 1, *after* round *insert a comma*, *and dele the comma after c*,
— *last line but one*, *after* lock *insert*; and *after* 13 *dele*;
129, 5, *after* traverses *insert l*, the lever shewing how the under side is bevelled off.
131, 4, *after* neck *read* and cap
137, 7, *for* vii. *read* vi.
13, *dele the words from* which *to* lanthorns, *and insert*—

The spindle *g*, which is connected with the crank *m*, does not revolve; the bars *h h* have a revolving motion communicated to them by the pulley *j*, and revolve on the spindle *g*; the bars *h h* communicate a revolving motion

to the bar *o o*, by means of the cranks *n n*, which causes the bar *o o* to revolve on its centre *m*: as the point *n* is at the same distance from the centre *m* as the point *i* is from the centre *g*, and the line *m n* is parallel to the line *g i*; *m n i g* form a parallelogram, and *n i* must always be parallel to *m g*; the centre *m* is perpendicularly over the centre *g*, and *m* and *g* being fixed points, the line *m g* must be perpendicular during the whole revolution of the bars; therefore *n i*, the opposite side of the parallelogram, must also be perpendicular; and as the lanterns are firmly fixed to the cranks *n i*, therefore they also must remain perpendicular during the whole of their revolution.

Page 144, *line* 4 *from bottom*, *dele* or
146, 22, *for b read l*
153, 5 *from bottom*, *for* : heat *read* heat :
163, 5 *from bottom*, *for* whole *read* body

A

LIST

OF

CONTRIBUTING MEMBERS

TO

THE SOCIETY.

CORRECTED UP TO THE END OF THE SESSION, 1827-8.

N.B. Those marked ** pay Five Guineas annually; those marked with * pay Three Guineas annually; those with § are perpetual Members.

---

§ THE EMPEROR OF RUSSIA.
J. QUINCY ADAMS, ESQ. PRESIDENT OF THE UNITED STATES.

A.

§ Atholl, John, Duke of, K.T. F.R.S. 11, *St. James's-square, and Blair Atholl, N.B.*
* Alvanley, William, Lord, 4, *Park-place, St. James's*
Acland, Sir Thomas Dyke, Bart. M.P. (V.P.) *Killerton, Devonshire*
§ Antrobus, Sir Edmund, Bart. F.R.S. F.S.A. M.R.I. *Hyde-park-corner, and Eaton-hall, Congleton*
Ablett, Joseph, Esq. *Llanbeder-hall, near Ruthen*
Abraham, John Hessey, Esq. F.L.S. *Sheffield*
Abraham, Robert, Esq. 27, *Keppel-street*
Ackermann, Mr. Rudolph, *Strand*
§ Ackers, James, Esq. *Lark-hill, near Manchester*
Acton, Samuel, Esq. 32, *Wilson-street, Finsbury-square*
Adair, Alexander, Esq. *Pall Mall*
§ Adam, James, Esq. *Lower Milnthorp, Kendal*
Adams, Mr. George, 28, *Haymarket*
Adams, Mr. Jesse

Adams, Mr, John, jun. *Hampton-street, Walworth*
Addison, R. Esq. *Batavia*
Addison, Robert, Esq.
Adlard, Mr. John, *Villiers-street, Strand*
Adrian, Mr. W. T. *Pentonville*
Agar, John, Esq. 59, *Stafford-place, Pimlico*
Agar, James, Esq. F.H.S. 3, *Holly-terrace, Highgate*
Aikin, C. R. Esq. 33, *Great James-street, Bedford-row*
Aikin, Mr. George, (Chairman of the Committee of Agriculture) *Harlington, Bedfordshire*
§ Ainger, Mr. Alfred, M.R.I. 10, *Doughty-street*
Ainslie, Henry, M.D. 25, *Dover-street*
§ Ainsworth, Richard, Esq. *Moss Bank, near Bolton*
Alcock, T. Esq. 11, *New Burlington-street*
Aldridge, John, Esq. 9, *Lincoln's-inn*
§ Alexander, Claude, Esq.
Alexander, E. N. Esq. *Halifax, Yorkshire*
Alexander, Robert, Esq. F.S.A. 3, *Essex-court, Temple*
Allen, Samuel, Esq. (*abroad*)
Alvarez, Joseph, Esq. (*abroad*)
§ Ames, John, Esq. *Clifton Wood, near Bristol*
Amesbury, J. Esq. 82, *Great Surrey-street*
Annand, Alexander, Esq. 9, *Adelphi-terrace*
Appleyard, Frederick Newman, Esq. *Lincoln's-inn-fields*
§ Arabin, Septimius, Captain R. N. (*abroad*)
Arding, Mr. James, 62, *Dorset-street, Salisbury-square*
Arkwright, Richard, Esq. M.P. F.H.S. *Cromford, Derbyshire*
§ Arnold, J. S. Esq. 31, *Golden-square*
Arthur, Mr. James Henry, *Garlick-hill, Upper Thames-st.*
Ashley, Mr. Joshua, 135, *Regent-street*
Assereti, Mr. Anthony, *Bridge-street, Westminster*
Atkins, John, Esq. (Alderman), 7, *Walbrook*
Atkinson, Mr. Charles, 8, *Upper Stamford-street, Blackfriars*
Atkinson, Peter, Esq. *York*
Atkinson, Thomas, Esq. *Old Swan-lane*
Atkinson, William, Esq. 9, *Paternoster-row*
Attersol, Joseph, Esq. 117, *Piccadilly*
Auld, William, Esq. *Edinburgh*
§ Austen, Benjamin, Esq. 32, *Guildford-street*
Austin, John Joseph, Esq. 131, *Oxford-street*
Austine, Mr. George, (*abroad*)
Ayer, C. A. Esq. 60, *Lower Grosvenor-street*
Aylmer, Mr. G. J.

B

§** Bedford, John, Duke of, (V.P.) F.S.A. F.L.S. F.H.S. 31, *St. James's-square, and Woburn, Bedfordshire*

Bathurst, Earl, K.G. 9, *Mansfield-street, Portland-place, and Oakley, Gloucestershire*
Bathurst, the Hon. and Rev. Charles, 9, *Mansfield-street, Portland-place*
§ Beverley, Algernon, Earl of, 8, *Portman-square*
Breadalbane, John, Earl of, F.R.S. F.H.S. 21, *Park-lane; Taymouth-castle, Perthshire; and Kelchburn-castle, Argyleshire*
§ Bristol, Frederick William, Marquess of, F.R.S. 6, *St. James's-square, and Ickworth-park, Suffolk*
§ Buchan, David, Earl of, LL.D. F.R.S.
§ Bayntun, Sir Henry William, Vice-Admiral, K.C.B.
§ Brooke, Sir Richard de Capel, Bart. F.R.S. M.R.I. F.H.S. *Great Oakley, near Kettering*
Belson, Major-General Sir Charles Philip, 50, *Park-street*
§ Balcarras, James, Earl of, 21, *Berkeley-square; Earlsferry Abbey, Fife; and Haigh-hall, Lancashire*
Backler, Joseph, Esq.
§ Bacon, John, Esq. F.S.A. 17, *Newman-street*
Badnall, Mr. Richard, jun. *Leek, Staffordshire*
§ Bagnold, Captain T. M. (Chairman of the Committee of Colonies and Trade), 7, *High-row, Knightsbridge*
Bailes, Mr. Henry, 434, *Oxford-street*
Bailey, Mr. Edward, 272, *High Holborn*
Bailey, Mr. George, 6, *Raymond's-buildings, Gray's-inn*
§ Bailey, Joseph, Esq. *Nanty-glo, near Abergavenny*
Bailey, Mr. William, 272, *High Holborn*
Bainbrigge, William, Esq. 44, *Parliament-street*
Baker, Mr. Ezekiel, 24, *Whitechapel-road*
Baker, Mr. Thomas, 7, *Fore-street, Cripplegate*
Baker, Thomas, Esq. 19, *Wilton-place, Knightsbridge*
Baker, Mr. Richard, 65, *Fore-street, Finsbury*
Baldwin, Robert, Esq. 6, *Queen's-square, Bloomsbury*
Bangley, George, Esq. 24, *John's-wood, Regent's-park*
§ Barclay, Arthur, Esq. M.R.I. F.G.S. 43, *Grosvenor-place*
Barker, Mr. George, 17, *Aldgate*
§ Barlow, P. Esq. F.R.S. *Royal Military Academy, Woolwich*
Barlow, Peter, Esq. *North-street, Dublin*
§ Barnard, Edward, Esq. *Deptford*
Barnes, John, Esq. *Glass-house-street, Shadwell*
Barnes, Mr. W. G. 15, *Great Russell-street, Covent-garden*
Barnet, Richard Clemson, Esq. 62, *Mortimer-street*
Barraud, Mr. F. J. 85, *Cornhill*
Barron, Mr. Francis William, 479, *Strand*
Barrow, Mr. Samuel, *Vauxhall-wharf*
Barry, Alexander, Esq. 13, *Furnival's-inn*
Barry, Charles, Esq. 27, *Foley-place*

§ Barry, P. B. Esq. *Totterton, Notts*
Barth, Mr. Benjamin, *Cockspur-street*
Barton, John, Esq. *Royal Mint*
Barton, Mr. Thomas
Bass, Mr. James, 76, *New Bond-street*
§ Bate, John, Esq.
Bayley, Mr. Joseph, 8, *Thayer-street, Manchester-square*
Bayly, W. H. Esq. 24, *Bentinck-street, Cavendish-square*
Baynes, Mr. Charles, *Duke-street, Lincoln's-inn-fields*
Beamish, Richard, Esq.
§ Bean, Nathaniel, Esq. *Bath*
§ Bean, Captain Isaac, *Bath*
Beauchamp, Mr. William, 22, *Grafton-street, Soho*
§ Beaufoy, Henry, Esq. F.R.S. F.L.S. *South Lambeth*
Beazley, Charles, Esq. 13, *John-street, Adelphi*
Beckwith, Mr. Henry, 58, *Skinner-street*
Beckwith, Mr. W. A. 58, *Skinner-street*
Bedingfield, John, Esq. F.S.A.
Bedington, William, Esq. *Camphill, Birmingham*
Behnes, Mr. William, 91, *Dean-street, Soho*
Bellamy, John, Esq. *House of Commons*
Bennet, Mr. Joseph, *Horseferry-road*
Bennett, Mr. John, *Stockwell-street, Greenwich*
Benson, Mr. John, *William-street, Bridewell Precinct*
Bentley, Mr. Richard, *Dorset-street, Salisbury-square*
§ Berkeley, John, Esq.
Bernasconi, Francis, Esq. 20, *Alfred-place*
Bernasconi, Francis, jun. Esq. 20, *Alfred-place*
Berry, Mr. Miles, 53, *Parliament-street*
Bevan, Mr. George, *Edgeware*
Biggs, Mr. Matthew (*abroad*)
Binyon, Mr. Charles, 2, *Fenchurch-street*
Binyon, Mr. Edward, (Chairman of the Committee of Miscellaneous Matters), 12, *Bell's-buildings, Salisbury-square*
Birch, Mr. Charles Lucas, 71, *Great Queen-street, Lincoln's-inn-fields*
Bird, Mr. G. *Hammersmith*
Bird, Mr. Stephen, *Kensington*
Birkbeck, George, M.D. 50, *Old Broad-street*
Birnie, George, Esq. *New-street, Dorset-square*
Bish, Thomas, Esq. 9, *Cornhill*
Bishop, George, Esq. 12, *Finsbury-place*
Bishop, Mr. John, *Rolls-buildings*
Bishop, William, Esq. 22, *North-bank, Lisson-grove*
Blackburne, John, Esq. *Churchyard-court, Temple*
Blackburne, John, Esq. M.P. F.R.S. 2, *Park-street, Westminster*

§ Blackett, John. jun. Esq. *Lloyd's Coffee-house*
Blackett, Powell Charles, Esq. 19, *Green-street, Grosvenor-square*
Blackwell, Mr. John, *Hungerford, Berks*
Blades, John, Esq. 5, *Ludgate-hill*
Blair, Marcus, Esq.
Blake, Mr. Charles, *Quintero, Chili, South America*
Bland, Michael, Esq. F.R.S. F.S.A. F.L.S. 30, *Montague-place, Russell-square*
Blount, W. Esq. 63, *Upper Norton-street*
Blyth, Henry, Esq. *Burnham Deepdale, Norfolk*
Board, Rev. Richard, *Rector of Westerham, Kent*
Boatright, Mr. James, 41, *Bury-street, St. James's*
§ Boddington, Sam. Esq. 31, *Upper Brook-street*
§ Bodkin, William Henry, Esq. (Chairman of the Committee of Accounts,) 1, *Tanfield-court, Temple*
Boissier, George Richard, Esq.
Bollaert, Mr. W. (*abroad*)
Bond, Mr. Charles
Bonelli, Angiolo, Esq. (*abroad*)
Booth, John, Esq. 34, *Red Lion-square*
Booth, Felix, Esq. 3, *Russell-square*
Borradaile, R. Esq. 5, *Barge-yard, Bucklersbury*
Borradaile, W. Esq. 34, *Fenchurch-street*
§ Bosanquet, Aug. Esq. 13 *Hanover-terrace, Regent's-park*
Bostock, John, M.D. F.R.S. F.L.S. F.G.S. (Chairman of the Committee of Correspondence and Papers), 22, *Upper Bedford-place, Russell-square*
Botfield, Thomas, Esq. *Hopton-court, near Bewdley, Worces.*
Botfield, William, Esq. *Decker-hill, near Shifnal*
Bower, Mr. John, *Clerkenwell-green*
Bowling, John, Esq. *St. George's Hospital, Hyde-park-corner*
Bradley, Mr. John, *Worcester*
§ Bradshaw, R. Haldane, Esq. M.P. *Worsley-hall, Lancashire*
§ Braithwaite, Mr. John, *New-road*
§ Bramah, Mr. F., F.H.S. *Woodlands, Tooting*
§ Bramah, Mr. Timothy, (Chairman of the Committee of Mechanics), *Biggin-hill, Norwood*
Brant, Mr. Thomas, *Hatton-garden*
§ Brennan, Charles, Esq.
Brice, Alexander, Esq. 17, *Euston-square*
Bridger, Mr. George, 7, *Aldgate*
Brindley, Joseph, Esq. *Rochester, Kent*
Broadwood, James, Esq. 33, *Great Pulteney-street*
Broadwood, Thomas, Esq. 33, *Great Pulteney-street*
Brockedon, William, Esq. (Chairman of the Committee of Polite Arts) 29, *Devonshire-street, Queen-square*

§ Brookes, Mr. William, *New-street-square*
Brooks, Mr. George Eyre, *Old Bond-street*
Brougham, Henry, Esq. M.P. F.R.S. 5, *Hill-street, Berkeley-square*
Broughton, Mr. Edward, *Southampton-street, Strand*
Brown, Burton, Esq. 1, *Stamford-street, Blackfriars*
Brown, Henry, Esq. *Derby*
Brown, Henry, Esq.
Brown, Captain Samuel, R.N.
Browne, Barwell, Esq. 30, *Wood-street, Cheapside*
§ Browne, J. H. Esq. *Weymouth*
Browne, W. Meredith, Esq. *King-street, Covent-garden*
§ Browning, James, Esq. 113, *St. John's-street*
Bruce, John, Esq. 16, *King's-parade, King's-road, Chelsea*
§ Brunel, Mark I. Esq. F.R.S. *Bridge-street, Blackfriars*
Buck, Rev. John, 28, *Arundel-street, Strand*
§ Buller, John, Esq.
Bulmer, William, Esq. *Clapham-rise*
Burbidge, Mr. James, 130, *Fleet-street*
Burchell, James, Esq. 24, *Red Lion-square*
Burdon, Alexander, Esq. 5, *Norfolk-street, Strand*
§ Burgess, Mr. William Robert, 107, *Strand*
Burnett, William, Esq. 61, *Torrington-square*
Burt, Mr. Henry Potter, *Devizes*
Burton, Lancelot, Esq. 21, *Newcastle-street, Strand*
Bury, William Fleetwood, Esq. 16, *Newgate-street*
Busk, Jacob Hans, Esq. *Ponsbourn, Herts*
§ Butler, Mr. Thomas, 4, *Cheapside*
Butterworth, William, Esq. *Berwick-place, Bermondsey*
Bye, John, Esq. 198, *High Holborn*

C

Clarendon, John Charles, Earl of, 18, *North Audley-street*
§ Colchester, Charles Lord, 18, *Spring-gardens, and Kidbrook, Sussex*
§ Clarges, Sir Thomas, Bart. 26, *South-street, Grosvenor-square*
Clifford, Hon. Hugh
§ Cabbell, Benjamin Bond, Esq. F.H.S. M.R.I. M.R.A.S. 1, *Brick-court, Temple*
Caddell, David, Esq. *Salisbury-square*
Calder, Mr. James, *Melissa-place, Brixton-hill*
Calahan, Mr. John, *Exeter-street, Strand*
Callam, Mr. Charles, 57, *Great Queen-street, Lincoln's-inn-fields*
Calverley, Thomas, Esq. 3, *Berkeley-square*
§ Campbell, Duncan, Esq.
§ Capel, John, Esq. 32, *Russell-square*

§ Cardwell, John, Esq. *Liverpool*
Carpue, J. C. Esq. F.R.S. 72, *Dean-street, Soho*
Carter, Mr. Charles John
Cartwright, Samuel, Esq. 32, *Old Burlington-street*
Caslon, Mr. Henry, 62, *Chiswell-street*
§ Cater, Richard, Esq.
Cato, Mr. James, *Poppin's-court, Fleet-street*
Cattley, William, Esq. F.H.S. *Barnet*
Cecil, Mr. Samuel (*abroad*)
§ Chalmers, Alexander, Esq. *Throgmorton-street*
Chambers, Mr. Francis, 3, *Willow-cottages, New North-road, near Canonbury*
Chambers, Mr. Richard, F.L.S. *Castle-street, Leicester-sq.*
Chapman, Thomas Sands, Esq. *Essex-street, Strand*
Chapman, Miss
§ Chantrey, Francis L. Esq. D.C.L. R.A. F.R.S. F.S.A. *Belgrave-place, Pimlico*
§ Chard, Mr. James
Charrington, Nicholas, Esq. *Mile-end*
Chater, Mrs. *Kilbourne, Middlesex*
Chater, Mr. Joseph, jun. *St. Dunstan's-hill*
Chawner, Thomas, Esq. 82, *Guildford-street*
Cherry, Mr. Frederick C. *Clapham*
* § Clark, Richard, Esq. Chamberlain of London, F.S.A. *Bridge-street, Blackfriars*
Clark, R. H. Esq. *Bridge-street, Blackfriars*
Clarke, Frederick Arnaud, Esq.
Clarke, Thomas Tuesdale, Esq. 34, *Upper Brook-street, and Swakeleys, near Uxbridge*
Clarke, William, Esq. 2, *James-street, Adelphi*
Clarke, William Tierney, Esq. *Hammersmith*
Clayton, Mr. Japheth, 24, *Old Bond-street*
Clement, Mr. Joseph, 19, *Prospect-place, Newington Butts*
Cobbett, Pitt, Esq. 14, *Bedford-street, Strand*
§ Coggan, Captain
§ Colby, Thomas, Lieut.-Col. Royal Engineers, LL.D. F.R.S. L. and E. *Tower of London*
Cole, John, Esq. 101, *High Holborn*
§ Coles, James, Esq. 39, *Old Change, and Herne-hill*
Coles, Mr. Thomas
§ Coles, William, Esq. 7, *Mincing-lane*
§ Collard, George, Esq. 16, *Clifford's-inn*
Collett, Thomas, Esq. 60, *Upper Stamford-street, Blackfriars*
Collinge, John, Esq. *Bridge-road, Lambeth*
Collingridge, Thomas, Esq. *Liquorpond-street*
Collingwood, John, Esq.
Collins, Mr. William, 227, *Strand*

Colnaghi, Mr. D. *Pall Mall East*.
Colnaghi, Mr. Martin Henry, *Cockspur-street, Charing-cross*
§ Colquhoun, James, Esq. 13, *St. James's-place*
Combes, John, Esq. *Basing-lane, near Cheapside*
Compton, Mr. Henry, 135, *Fenchurch-street*
Cony, Thomas, Esq.
Cooke, Charles Gomond, Esq. *Southampton-street, Covent-garden*
Cooke, Mr. H.
Cooke, Henry Smith, Esq. 2, *Church-court, Lothbury*
Cooke, Layton, Esq. 69, *Great Russell-street, Bloomsbury*
Cooke, Mr. William
Cooke, Edward, Esq. 1, *Elm-court, Temple*
Cooper, George, Esq. 7, *Copthall-court, Throgmorton-street*
Cooper, Mr. John Thomas, 9, *Paradise-street, Lambeth*
Cooper, Mr. Joseph Henry, *Millbank, Westminster*
Copland, Alexander, jun. Esq. 91, *Gloster-place*
Copland, Charles, Esq. 2, *James-street, Adelphi*
Copland, William, Esq. 29, *Great George-street, Westminster*
§ Coppens, B. M.D.
§ Cornell, G. Esq. 17, *Buckingham-street, Fitzroy-square*
Cosser, Mr. Andrew, *Pedlar's-acre*
Cottam, Adam, Esq. *Whalley, near Blackburn*
Cottam, Mr. George, F.H.S. (Chairman of the Committee of Manufactures), *Agricultural Repository, Winsley-street*
Cottingham, Lewis Nockalls, Esq. *Waterloo-road*
Cotton, Robert Turner, Esq. 15, *Great St. Helens*
Coward, Mr. John, (*abroad*)
Cowen, Robert, Esq. *Carlisle*
Cowling, Mr. William, (*abroad*)
Cox, Charles, Esq. *Beaufort-wharf*
Cox, Stephen, Esq. 22, *Nottingham-street*
§ Cox, William, Esq. *Dartmouth-row, Blackheath*
§ Coxe, Peter, Esq. 2, *Archer-street, Soho*
Coxwell, Henry, Esq. F.L.S. *Roll's-buildings, Fetter-lane*
Crace, Mr. Frederick, 14, *Wigmore-street, Cavendish-square*
Craig, Charles Alexander, Esq. 12, *Great George-street, Westminster*
Crake, William, Esq. 18, *Old Quebec-street*
Crane, Mr. H. S. *Stratford, Essex*
Crauford, William Petrie, Esq. 97, *Mount-street, Grosvenor-square*
Crawshay, William, Esq. *George-yard, Upper Thames-street*
Crawter, Henry, Esq. 7, *Southampton-buildings, Holborn*
Creyke, Ralph, jun. Esq. *Rawcliffe-house, Thorne, Yorkshire*
Cribb, Mr. William, 34, *King-street, Covent-garden*
Crockford, Mrs. *Sussex-place, Regent's-park*

Crockford, Miss, *Sussex-place, Regent's-park*
Crockford, Mr. Edward, 136, *New Bond-street*
Croggan, William, Esq. *Belvidere-road, Lambeth*
§ Crowe, Philip, Esq. *Hartley, Coulsdon, Surrey*
Cruckshanks, Mr. Alexander, *Quintero, Chili, South America*
Cubitt, Mr. Thomas, *Belgrave-square, Pimlico*
Cuff, Mr. J. 50, *Curzon-street*
Cumming, Mr. George
Curl, Mr. Charles, *Grosvenor-street, West Pimlico*
§ Curties, John, Esq. 39, *Devonshire-place*

D

Dalhousie, George, Earl of, Governor-General of Canada
** Dartmouth, William, Earl of, F.H.S. 12, *Berkeley-square, and Sandwell-park, Staffordshire*
§ De Dunstanville, Francis, Lord, *South-place, Knightsbridge, and Tehidy-park, Cornwall*
Dunally, Henry, Lord, *Dunally-castle, Tipperary*
Durham, John George, Lord, 13, *Cleveland-row, St. James's; Lambton Castle, near Durham; and Copse-hill, Wimbledon, Surrey*
§ Denys, Sir George William, Bart. 15, *Stratford-place, and Easton Neston, Northamptonshire*
Duckett, Sir George, Bart. V.P. F.R.S. F.S.A. F.H.S. 45, *Hertford-street, May-fair*
Daly, John, jun. Esq. 155, *Upper Thames-street*
Dalton, Henry, Esq. F.R.S. *Knaith, Lincolnshire*
§ Daniel, John, Esq.
D'Arcy, Col. Joseph, F.H.S. *Bath-house, Leicester-square*
Darke, Samuel W. Esq. 30, *Red Lion-square*
Davenport, Mr. John, *King's-arms-yard, Coleman-street*
§ Davidson, John, jun. Esq. *Cork-street*
Davidson, Thomas, Esq. *Cork-street, Bond-street*
Davies, Mr. David, 39, *Gutter-lane*
Davies, Mr. David, *Wigmore-street*
Davies, D. D. M.D. 5, *Fitzroy-square*
Davies, John, Esq. 8, *Devonshire-square, Bishopsgate-street*
§ Dawkins, James, Esq. F.R.S. F.S.A.
Day, David Hermitage, Esq. *Rochester*
§ Day, Richard, Esq. 28, *Montague-street, Russell-square*
Day, Thomas, Esq. 28, *Montague-street, Russell-square*
Dayus, Mr. Henry, *Bankside*
§ Deacon, James Henry, Esq. 15, *Duke-street, Westminster*
Deakin, Francis, Esq. *Birmingham*
Deakin, John Osmond, Esq. *Downing College, Cambridge*

Delafons, John Palmer, Esq. 14, *George-street, Hanover-square*
Delamain, William, Esq. 6, *Wells-street, Oxford-street*
Denham, Mr. B. E. 17, *Bull and Mouth-street*
§ Dent, William, Esq. *Battersea-rise*
Depree, Charles Thomas, jun. Esq. *Foundling Terrace, Gray's-inn-road*
De Renzy, Capt. George Webb, *Newcastle-county, Limerick*
§ Des Granges, Mr. Peter, 33, *Cockspur-street*
Devaux, Charles Pierre, Esq. *Fenchurch-street*
Devey, Mr. William, 8, *Shoe-lane*
Deville, Mr. James, 367, *Strand*
Deville, Mr. William, 367, *Strand*
§ Dew, Dyer, Esq. 59, *Guildford-street*
§ Dickinson, Charles, Esq. F.R.S. F.S.A.
Dickson, James, Esq. *Kingston, Jamaica*
Dickson, Mr. John, *Earl-street, Horseferry-road*
Dickson, Jonathan, Esq. (*abroad*)
Dixon, Mr. Daniel, *Mark-lane*
Dobree, Samuel, Esq. *Southfield-lodge, Eastbourne, Sussex*
§ Dollond, George, Esq. F.R.S. 59, *St. Paul's-churchyard*
Donkin, Bryan, Esq. *Paragon, Kent-road*
Donkin, John, Esq. *Paragon, Kent-road*
Donalley, Admiral, 4, *Queen Ann-street, Cavendish-square*
Douglas, John, Esq. *Old Hull, near Manchester, and Gyrn, Flintshire*
Dowley, Mr. J. 35, *Howland-street*
Dowson, Joseph, Esq. 69, *Welbeck-street, Cavendish-square*
Drane, Thomas, Esq. *Bromley, Middlesex, and* 69, *Cornhill*
Drew, Mr. Thomas, 20, *Queen's-buildings, Brompton*
Driver, G. N. Esq.
§ Dubois, William, Esq. *Hulton-street, Cross-street, Islington*
Du Cane, Charles, Captain R.N.
Dudley, Mr. Thomas, 34, *King-street, Soho*
Duff, Arthur, Esq. 62, *York-terrace, Regent's-park*
Dugdale, Richard, Esq.
§ Duppa, Mrs. *Upper Homerton*
§ Dutton, John, Esq.
Dyson, Thomas, Esq. *House of Commons*

E

§ Egremont, George, Earl of, F.R.S. F.S.A. M.R.I. F.H.S. 4, *Grosvenor-place, and Petworth, Sussex*
§ Ellis, the Hon. G. Agar (V.P.) F.R.S. F.S.A. 8, *Spring-gardens*

§ Eaton, Peter, Esq. *Westford, Essex*
§ Eckersall, John, Esq. *Claverton, near Bath*
Eckstein, Mr. George Frederick, 13, *Holborn*
Edgar, Mr. Robert, jun. *Harp-lane, Great Tower-street*
Edgar, William, Esq. 12, *Piccadilly*
Edkins, Mr. S. S. *Salisbury-square*
Edmiston, Mr. A.
Edmonds, James, Esq.
Edmonds, Mr. John, 43, *Fetter-lane*
Edridge, W. B. Esq. 28, *Haymarket*
Edwards, Mr. David John Moses Morgan Thomas, 21, *King-street, Holborn*
Edwards, Mr. George, *Paul's Wharf*
Edwards, Hugh, Esq. 56, *Guildford-street*
§ Edwards, John, Esq. *Lynn, Norfolk*
§ Edwards, Thomas, Esq. *Swansea, Glamorganshire*
Eddy, Mr. Thomas, 354, *Oxford-street*
Elder, Mr. Alexander, 65, *Cornhill*
Eley, Mr. Charles, *Lovell's-court, Paternoster-row*
§ Elliot, Obadiah, Esq. *Spring-hill, Bromley, Kent*
Elliott, A. Esq. *Osnaburg-street, Regent's-park*
Ellis, James, Esq. *Barming, Kent*
England, Mr. Joseph, jun. 1, *Wilmot-street Brunswick-square*
§ Errington, John, Esq.
Essex, Mr. William, jun. *Polygon, Somers Town*
§ Evans, John, Esq. 32, *Hertford-street, May-fair*
Evans, Mr. John, 104, *Wardour-street*
Evans, Mr. John, *Gas Works, Horseferry-road*
Evans, Mr. Joseph, 25, *Northumberland-street, Strand*
Everill, Mr. Thomas, 67, *St. James's-street*
Eversfield, Mr. J. 3, *Smith-street, Westminster*
§ Ewbank, Andrew, Esq. 37, *Upper Grosvenor-street*

F

Falmouth, Edward, Earl of, *St. James's-square*
Ferrers, Washington, Earl of, 9, *Queen Ann-street, Cavendish-square*
Fife, James Duff, Earl of, 18, *Berkeley-square; Duff-house, and Balvenie-castle, Banffshire; Innes-house, Moray; and Mar-lodge and Pelgett-castle, Aberdeenshire*
§ Fermor, the Hon. J. W. Major-General, F.R.S. F.S.A. M.R.I. 2, *Upper Grosvenor-street*
Farquhar, Sir Robert Townshend, Bart. 2, *Richmond terrace, Whitehall*
§ Farquhar, Sir Thomas, Bart. 16, *St. James's-street*

Fairlie, John, Esq. 49, *York-terrace, Regent's-park*
Faraday, Michael, Esq. F.R.S. F.G.S. M.R.I. (Chairman of the Committee of Chemistry) *Royal Institution, Albemarle-street*
Farnell, John, Esq. *Isleworth*
Farnell, Henry, Esq. *Isleworth*
Fawcett, Mr. John, 2, *Holborn-court, Gray's-inn*
Fawell, Mr. Thomas, *Old Broad-street*
Fay, Mr. Cyrus, 27, *George-street, Hanover-square*
Feetham, Mr. William, 9, *Ludgate-hill*
Fenn, Mr. Joseph, 105, *Newgate-street*
§ Fermor, William, Esq. *Tosmon, near Brackley*
Field, Joshua, Esq. *Cheltenham-place, Lambeth*
Field, Mr. John, 5, *Bennet-street, St. James's*
Field, Mr. Samuel, *Reading*
§ Field, William, Esq. *Cold-harbour-lane, Camberwell*
Fielding, Jeremiah, Esq. *Manchester*
Figgins, Mr. Vincent, jun. *West-street, Smithfield*
Finden, Edward, Esq. 19, *Southampton-place, New-road*
Finn, Mr. Lawrence, 164, *Regent-street*
Firmin, Mr. R. S. *Clare-court, Drury-lane*
Fisher, Mr. Charles F. B. 26, *Euston-place, Euston-square*
Fisher, F. Esq. 19, *Queen-square, Bloomsbury*
Fisher, Thomas, Esq. *Haverstock-hill, Hampstead-road*
Fisher, Thomas, Esq. *Gloucester-terrace, Hoxton*
Fitch, Mr. Samuel, 24, *Walbrook*
Fitzclarence, Colonel Frederick, 4, *Grosvenor-place*
Fitz-Gerald, Maurice, Esq.
Fitz-Gerald, Maurice, jun. Esq. *East Indies*
Fletcher, John, Esq. *Chester*
§ Fletcher, Matthew, Esq. 2, *Lime-street-square*
Fletcher, William Rivers, Esq.
Flexney, Spencer, Esq. *Bedford-row*
Flight, Mr. James, 101, *St. Martin's-lane*
Flight, Joseph, Esq. 1, *Coventry-street*
Flindell, Mr. Thomas
Flower, Henry, jun. 12, *Compton-terrace, Islington*
Foot, Mr. John, 2, *Parliament-street, Abingdon-street*
Forbes, John, Esq. *Church-street, Stoke Newington*
Forbes, L. H. Esq. *Hardingston, Northampton*
Forbes, William Nairn, Esq. *Blachford, N. B.*
Ford, Mr. W. T.
Forster, John, Esq. 18, *Carey-street, Lincoln's-inn*
Forsyth, William, Esq. 25, *Fenchurch-street*
Forty, Mr. William, *Tothill-street, Westminster*
Foss, Edward Smith, Esq. F.A.S. F.H.S. 36, *Essex-street*
Foster, Thomas, Esq. 12, *Clement's-lane, Lombard-street*

Fowler, Mr. John, jun. *Belvidere-road, Lambeth*
Fox, James, Esq. *Plymouth*
Fox, Samuel, Esq. *London-house, Hackney*
Fox, Thomas, Esq. R. N.
Fraser, William, Esq.
§ Freeman, Stephen, Esq. *Coventry*
§ Freir, Chevalier Cipriano Riberio, F.R.S. F.S.A.
French, Mr. J. M. *Sweeting's-alley*
Friend, Mr. H. *Bridge-street, Southwark*
§ Fuller, Mr. J. G. *St. James's-street*
Fullerton, William, Esq. *Skeldon, Ayrshire*
Furniss, Mr. Martin, 21, *Belgrave-place, Pimlico*

G

Grantley, Lord, *Wonersh, near Guildford, Surrey*
§ Glenlyon, James, Lord, 62, *Green-street, Grosvenor-square*
Galway, William George Monckton, Viscount, *Serlby-hall, near Bantry, Nottinghamshire, or Kirkham's-hotel*, 48, *Brook-street*
Greville, the Hon. Captain Robert Fulk
Gallienne, Mr. Richard
Gaitskell, Thomas, Esq. 229, *Bermondsey*
Galloway, Mr. Alexander, *West-street, Smithfield*
Galsworthy, John, Esq. 10, *Symond's-inn*
§ Galton, Samuel, Esq. *Dudston, near Birmingham*
Ganthony, Mr. Richard, 83, *Cheapside*
Gardner, Mr. Edward, *Hammersmith*
Gardner, Mr. James, 163, *Regent-street*
§ Garling, Mr. Henry, 13, *Little James-street, Bedford-row*
Garnett, Robert, Esq. 12, *Aldermanbury*
Garratt, John, Esq. (Alderman), *Queen-street-place, Southwark-bridge*
Garrow, George, Esq. (*abroad*)
Garvock, Captain John, 12, *South-place, Kennington, and Adjutant-General's Office, Horse-guards*
Gassiot, John Peter, Esq. 79, *Mark-lane, Tower-street*
Gates, Mr. John, 36, *Great Queen-street*
Gautier, John Lewis, Esq. 41, *Speldhurst-street, Burton-crescent*
Geddes, Arthur, Esq. 6, *Stafford-place, Pimlico*
George, Mr. J. jun. *Holywell-street, Strand*
Gibbons, Mr. J. 3, *Red Cross-street*
Gibbons, Mr. John, 6, *King-street, Clerkenwell*
Gibbs, Mr. Joseph, *Crawford-mills, Kent*
Gifford, William, Esq. 24, *Abingdon-street, Westminster*
Gill, H. Esq. 26, *Hampton-street, Walworth*

Gill, Thomas, Esq. 125, *Strand*
§ Gillett, William, Esq. 40, *Friday-street, Cheapside*
Gillman, William, Esq. *Bank-buildings, Cornhill*
Glanville, Mr. Jeremiah, *Smith-street, Westminster*
Gledstanes, J. H. Esq. 11, *Regent-street*
§ Goding, James, Esq. *Knightsbridge*
Goldring, George, Esq. 1, *Jamaica-place, Limehouse*
Goldsmid, Isaac Lyon, Esq. *Dulwich-house, Surrey*
Gomme, Mr. James, *Hammersmith*
Gooch, Richard, Esq.
§ Good, Mr. William, 20, *Coleman-street*
Goodall, Thomas, Esq. 51, *Woburn-place*
Goodwin, Joseph, Esq. *Royal Mews, Pall-Mall*
Gorman, John, Esq. (*abroad*)
Gosling, William, Esq. 5, *Portland-place*
Goudge, Alexander, Esq.
Gould, Captain R.N. *Frome-house, Dorchester*
Grandville, Lewis, Esq. (*abroad*)
Granville, A. B., M.D. F.R.S. F.L.S. M.R.I. 16, *Grafton-street, Bond-street*
Graves, William, Esq. *His Majesty's Printing-office, East Harding-street, Shoe-lane*
Gray, Mr. Samuel Forfeit, F.L.S. F.H.S. 97, *New Bond-street*
§ Gray, Walker, Esq. *Southgate, Middlesex*
Green, Henry, Esq. F.H.S. 25, *Gracechurch-street*
Green, James, Esq. *Falcon Glass-house, Blackfriar's-bridge*
Green, Mr. James, 14, *Leman-street, Goodman's Fields*
§ Green, Peter, Esq. *Crookham, Berks*
Green, Mr. William, *Laytonstone*
Green, William Pringle, Lieut. R.N.
§ Gregory, Richard, Esq. 56, *Berners-street*
Gregory, Mr. George Johnson, *Phœnix Gas-works, Bankside*
Greig, Alexander, Esq.
Greig, James, Esq. *Rectory-house, Saint Michael's-alley, Cornhill*
Greig, William, Esq. 32, *City-road*
§ Grenfell, Charles Pascoe, Esq. 16, *Chester-street, Grosvenor-place*
Griffin, Mr. John, 67, *Brunswick-street, Glasgow*
Griffith, J. Esq. 16, *Finsbury-place, South*
Griffith, Julius, Esq. (*abroad*)
Griffiths, Richard, Esq. *Thorn-grove, Worcester*
Grimble, Mr. James, jun. *Claremont-square*
Grindlay, Robert Melville, Esq. 35, *North Bank, Regent's-park*
Groom, Mr. John, 35, *Brompton-row*

Groom, Mr. Samuel, *Pine-apple-place, Edgeware-road*
§ Grote, George, Esq. *Threadneedle-street*
Grove, Mr. Christopher, 150, *New Bond-street*
§ Guest, Josiah John, Esq. *Merthyr Tidvil*
Gunby, John, Esq. *Bordersley, near Birmingham*
§ Gwilt, George, Esq. F.A.S. *Union-street, Borough*

H

* Hardwicke, Philip, Earl of, K.G. F.R.S. F.S.A. M.R.I. *St. James's-square*
* Harrowby, Dudley, Earl of, F.S.A. 39, *Grosvenor-square*
Hampson, Sir George, Bart. 27, *Bolton-street, May-fair*
Henniker, the Hon. J. 21, *Grosvenor-square*
Herne, Sir William, *Maidenhead*
Haden, Mr. George, *Trowbridge, Wilts*
Hadley, Joseph Henry, Esq. *Laurel-cottage, Hampstead*
Hague, Mr. George, *Manchester*
Hakewill, Henry, Esq. 5, *Brunswick-place, Regent's-park*
Hall, Samuel, Esq. *Basford, near Nottingham*
Hallen, Mr. Benjamin, 3, *Winsley-street, Oxford-street*
Hallett, William, Esq. *Candys, near Southampton*
Hamilton, James, Esq. (*abroad*)
Hamilton, John, Esq. 31, *Berwick-street, Soho*
Hamilton, Otho William Hawtrey, Esq. 5, *James-street, Westminster*
Hamilton, Robert, Esq. (*abroad*)
§ Hammerton, Charles, Esq. *Whitefriar's-dock*
Hammet, James Esdaile, Esq. 21, *Lombard-street*
§ Hammond, Anthony, Esq. 4, *Saville-row*
§ Hammond, William, jun. Esq. 9, *Queen-square, Bloomsbury*
Hancock, Samuel. Esq. *Navy Pay-office, Somerset-house*
Hannam, Peter, Esq. *Northborn-court, Deal*
Hansard, Thomas Curson, Esq. 11, *Salisbury-square, Fleet-street*
Hansard, James, Esq. 7, *Southampton-street, Bloomsbury*
Hansard, Luke G. Esq. 10, *Bedford-square*
Harcourt, C. H. Esq.
§ Harding, John, Esq. *Pinhoe, Devon, and* 1, *York-place, Walworth*
Harding, Thomas, Esq. 167, *Great Surrey-street*
Harding, J. D. Esq. 12, *North-crescent, Tottenham-court-road*
Hardy, Robert, Lieut. R.N. *East-street, Red Lion-square*
Hardy, Mr. William, 5, *Wood-street, Coldbath-square*
§ Harman, Jeremiah, Esq. 6, *Adam's-court, Old Broad-street*
Harris, Robert, Esq. *Reading*

Harrison, Edmund, Esq. *Privy-council-office, Whitehall*
§ Harrison, George, Esq. 20, *Ebury-street*
§ Harrison, Mr. Henry, 36, *King-street, Covent-garden*
Harrison, Samuel, Esq. *Bank of England, and* 3, *Poulton-row, Walworth*
Harrison, Mr. William, *Devizes*
Haswell, Mr. John
Hatchard, Charles, Esq. 1, *Belgrave-place, Pimlico*
Hawkins, Capt. E. I. Company's Engineers, (*abroad*)
Hawks, John, Esq. 5, *Weymouth-street, Portland-place, and Gateshead, Durham*
§ Hayes, Charles, Esq. *Arlington-place, Myddleton-square*
Hayes, Joseph, Esq. 31, *Upper Charlotte-street, Fitzroy-sq.*
Haynes, George, jun. Esq. *Hampstead-road*
Hayward, Mr. J. P. 97, *Newgate-street*
Heath, George, Esq. 57, *Park-street, Grosvenor-square*
Heaver, John, Esq.
§ Hedges, K. R. Esq. 47, *Dean-street, Soho*
Hedley, Josh. Henry, Esq. *Laurel-cottage, Hampstead, Middlesex*
Henchman, Francis, Esq. *Homerton, Middlesex*
Hendrie, Mr. Robert, 12, *Tichborne-street*
Henekey, Mr. George, 29, *High-street, Shadwell*
Hennah, Mr. Henry, 17, *Essex-street*
Hennell, Mr. Edward, *Apothecaries' Hall*
Hennell, Mr. Henry, (Chairman of the Committee of Chemistry), *Apothecaries' Hall*
Hennell, Mr. Robert, 14, *Northumberland-street, Strand*
Hennet, Mr. George, 5, *Great Ormond-street, Queen-square*
Henniker, Major Jacob, Captain R.N.
Herbert, Mr. William, 1, *Farm-street, Berkeley-square*
Herapath, W. Esq. *Bristol*
Hewitt, Mr. James, *Old Hummums, Covent-garden*
Hibon, Mr. William, 34, *Old Change*
Hibbert, Samuel, M.D. *Edinburgh*
Higden, George Byfield, Esq. *Denmark-hill, Camberwell*
§ Higgins, J. Esq. M.R.I. 370, *Oxford-street*
Hill, Mr. William, 5, *Charing-cross*
Hill, Mr. John, *Piccadilly, corner of Albemarle-street*
Hillman, James Penny, Esq. 79, *Lower Thames-street*
Hinxman, John, Esq. 70, *Great Russell-street*
§ Hoare, Charles, Esq. F.R.S. F.H.S. F.S.A. 37, *Fleet-street, and Luscomb, near Teignmouth*
Hobdell, Mr. Henry, *Bell's Buildings, Salisbury-square*
Hoblyn, Thomas, Esq. (V.P.) F.R.S. 125, *Sloane-street*
§ Hobson, William, Esq. *Mark-field, Stamford-hill*
Hodges, Henry, Esq. *Clapham-common*

Hodges, Thomas Law, Esq. *Hempstead, Cranbrook, Kent*
Hodsoll, William Thomas, Esq. *Bank Chambers, Lothbury*
Holden, Edward, Esq.
Holdsworth, Arthur Howe, Esq. M.P. (V.P.) *Dartmouth*
Holford, Charles, Esq. F.H.S. *Hampstead*
Hollis, Charles, Esq. 10, *Upper Stamford-st. Blackfriars*
Holliday, Mr. Thomas
Holmden, Mr. John George, 10, *President-street, West, Goswell-road*
Holmes, John Pocock, Esq. 27, *Old Fish-street, Doctors'-commons*
Holt, Mr. Thomas
Holtzapffell, Mr. I. J. *Charing-cross*
Homfray, George, Esq.
Hood, W. S. Esq. Commander R.N. *H.M.S. Hyperion, Newhaven*
Hookey, Mr. William, *His Majesty's Dock-yard, Deptford*
Hooper, Mr. John, 20, *Queenhithe*
Hope, Benjamin, Esq.
§ Hope, H. P. Esq. 30, *New Norfolk-street*
§ Hope, T. Esq. F.R.S. F.S.A. M.R.I. *Duchess-street*
Horton, R. W. Esq. M.P. 4, *Richmond-terrace, Whitehall*
Howard, William, Esq. 115, *Old-street*
Howe, John, Esq. 4, *St. Dunstan's-hill*
§ Howell, Edward, Esq. *Cheltenham*
Hughes, Robert, Esq. 115, *Piccadilly*
§ Hughes, William Hughes, Esq. F.S.A. F.L.S. M.R.I. F.H.S. *Clapham Common, Surrey, and Belle-Vue-house, Ryde, Isle of Wight*
Hullett, John, Esq. 102, *Leadenhall-street*
§ Hume, Joseph, Esq. (V.P.) M.P. F.R.S. 6, *Bryanstone-sq.*
Hume, George Walter, Esq. 108, *Long-acre*
Hume, Joseph, Esq. 108, *Long-acre*
Hume, Robert Montague, Esq. 97, *Great Surrey-street, Blackfriars'-road*
Humfrey, Lebbeus Charles, Esq. 4, *Pump-court, Temple*
Humphry, Mr. James W. 11, *Lombard-street*
Hunt, James, Esq. 4, *Craven-street, Strand*
Hunter, George Henry, Esq. 7, *Cateaton-street*
Hunter, Robert, Esq. F.A.S. 46, *Burton-crescent*
§ Hurd, Philip, Esq. *Temple, and Kentish-town*
Hurd, Captain Samuel P. (*abroad*)
Hurle, Henry, Esq. 20, *Bedford-row*
Hurlstone, Alfred P. Esq. *Clement's-inn, Strand*
§ Hurst, Robert, Esq. M.P. *Horsham-park, Sussex*
Hurst, Thomas, Esq. 390, *Strand*
Hurwood, Mr. W. E. *Webber-street, Coburg-theatre*

Hutchins, William, Esq. 25, *Hanover-square*
Hutchon, Thomas, Esq. 14, *Finsbury-circus*
Hutchons, Mr. James, 7, *Dorset-place, in the Square, Regent's-park*
§ Hutton, Mr. John, *Marsk, near Richmond, Yorkshire*

I

§ Ilchester, Henry Stephen, Earl of, *Burlington-street*
Ibbotson, J. Holt, Esq. 12, *Great Smith-street, Chelsea*
§ Idle, John, Esq. *Camberwell*
Ireland, J. Esq. 28, *Old Burlington-street*

J

Jackson, Mr. George, 50, *Rathbone-place*
Jackson, John, Esq. 1, *Billiter-lane*
Jackson, Randle, Esq. *North Brixton, Surrey, and* 3, *Middle Temple-lane*
§ Jackson, Rev. William, *Couzen-lane, Upper Thames-street*
Jacob, Joseph, Esq. *Michael's-grove, Brompton*
§ James, William, Esq. *Warwick*
Jarman, Mr. J. B. 4, *Cleveland-court, St. James's*
Jeakes, Mr. William, 51, *Great Russell-street, Bloomsbury*
Jeffcott, John William, Esq.
Jenkins, Charles H. Esq. *Shard-place, Peckham*
Jennings, Henry C. Esq.
Jennings, Mrs.
Jennings, T. Esq. *Woodbine-cottage, Hampstead-green*
§ Jenour, Joshua, Esq.
Jenyns, Rev. George, *Bottisham-hall, Cambridgeshire*
* Jessup, William, Esq. *Farningham, Kent*
Johnson, Mr. Henry, 10, *Fountain-court, Strand*
Johnson, Mr. Joseph, 13, *Southampton-street, Strand*
§ Johnson, Mr. William, *Blackwall*
Johnston, Mr. John, 19, *Cursitor-street, Chancery-lane*
§ Johnston, Mr. Robert, *New-street-square, Fetter-lane*
Johnston, Mr. Robert, 68, *Cornhill*
Jones, Charles, Esq. 53, *Gower-street*
Jones, Mr. David, 12, *Millbank*
Jones, Mr. F. 5, *Ludgate-hill*
Jones, Mr. James, (Chairman of the Committee of Mechanics), 6, *Well-street, Wellclose-square*
§ Jones, John, Esq. 44, *Portland-place*
Jones, Thomas, Esq. 51, *Strand*
Jones, Mr. Thomas, 5, *Ludgate-hill*
Jones, William, Esq. 26, *Parliament-street*

Jorden, John Stubb, Esq. *Birmingham*
Jourdain, Wm. Cornelius, Esq. 14, *Artillery-place, Finsbury*
Jupp, William, Esq. 37, *Old Broad-street*

K

Kirkwall, Lord Viscount, *Taplow-court, near Maidenhead*
Kay, Richard, Esq. 12, *Brown-street, Manchester*
Keen, William Rivers, Esq. *Paradise-row, Lambeth*
Kelly, T. Esq. 17, *Paternoster-row*
Kemshead, Henry, Esq. *Westbourne-green*
Kendall, Edward Aug. Esq. F.S.A.
Kendrick, Dr. James, M.D. F.L.S. *Warrington*
Kennerley, Mr. T. jun. *Bedford-court, Bedford-street, Covent-garden*
Kent, George Davies, Esq. *Corpus Christi College, Oxford*
Kent, William, Esq. *Clapton*
Kepp, Mr. Richard, 42, *Chandos-street, Covent-garden*
Kernot, Mr. James Harfield
Kerr, Charles, Esq. *King's Arms-yard, Coleman-street*
Kerrick, Thomas, Esq. *Harlestone, Norfolk*
Kidder, Mr. John, 6, *Strand*
Kidman, John, Esq. *Racquet-court, Fleet-street*
Kinder, Mr. Charles, 1, *Cheapside*
King, James, Esq. 4, *Tavistock-place*
King, Rev. Samuel, *Latimers, Bucks*
Kirkman, Joseph, Esq. 67, *Frith-street, Soho*
§ Knowlys, W. C. Esq. *Wood's Farm, near Slaugham, Sussex, and Mincing-lane*

L

§ Lansdowne, Henry, Marquess of, F.R.S. 54, *Berkeley-square, and Bowwood-park, Wilts*
Lowther, William, Viscount, (V.P.) F.S.A. 2, *Spring-garden-terrace*
Lubbock, Sir John William, Bart. 24, *St. James's-place*
§ Laurent, Sir Francis
Labalestrier, Mr. Francis, 67, *Great Russell-street, Bloomsbury*
Laing, Mr. David, 10, *Villiers-street, Strand*
Lamb, Alexander, Esq. (*abroad*)
Lamb, George, Esq. 2, *James-street, Adelphi*
Lambert, James, Esq. 7, *Bedford-row*
Lambert, John, Esq. *America*
Lancaster, Henry, Esq. 17, *New-street, Vincent-square*
Lane, Frederick, Esq. *Lynn, Norfolk*
§ Langridge, W. B. Esq. *Lewes, Sussex*

Langston, John Haughton, Esq. M.P. *Sanden, Oxfordshire, and* 143, *Piccadilly*
Lawrance, Edward, Esq. 16, *Bucklersbury*
§ Lawson, Henry, Esq. *Hereford*
§ Lawson, Johnson, Esq. 9, *Orange-street, Bloomsbury*
Lea, B. Esq. *St. James's-street, Clerkenwell*
Lea, Mr. William, *St. James's-street, Clerkenwell*
Leadbeter, Mr. Richard, *Thompson's-terrace, Myddleton-sq.*
§ Leader, Henry, Esq. 30, *Great St. Helen's*
Leaf, W. Esq. 39, *Old Change, and East Dulwich*
§ Leaf, W. jun. Esq. *Old Change, and Herne-hill*
Lee, James Prince, Esq. *Trinity College, Cambridge*
Lee, Henry, Esq. 13, *Finsbury-place*
Lee, Henry, jun. Esq. 30, *Chiswell-street*
Lee, J. Esq. 6, *Bishopsgate-street-within*
§ Lee, J. F. Esq. LL.D. *Doctors'-commons*
§ Lee, Stephen, Esq. 14, *Kensington-square*
§ Lee, Mr. William, 61, *Charing-cross*
Lees, William, Esq. *Ordnance-office, Tower*
Lefevre, Charles Shaw, Esq. *Whitehall-place*
§ Legh, John George, Esq. F.H.S. 32, *Brook-street, and High Leigh, Cheshire*
Leigh, James Heath, Esq. 6, *Lincoln's-inn New-square*
Le Mann, Frederick, Esq. 15, *Threadneedle-street*
Le Mesurier, John, Esq. *Alderney*
Letts, Thomas, Esq. 35, *Royal Exchange*
Lettsom, Samuel F. Esq.
Levien, Mr. M. (*abroad*)
§ Levien, Solomon, Esq.
Lewer, W. H. Esq. (*abroad*)
§ Lewis, Thomas, Esq.
Lewis, Mr. William, 103, *St. Martin's-lane*
§ Liddell, William, Esq. *Hull, Yorkshire*
Liddiard, Mr. Gilbert, *Stepney*
Lincolne, Abraham, Esq. 33, *Highbury-place*
Lindo, I. Esq. (*abroad*)
Lister, Isaac Solly, Esq. 8, *Lincoln's-inn-fields*
Lloyd, Mr. John, 77, *Snow-hill*
Lloyd, Mr. John, jun. (*abroad*)
§ Lloyd, William, Esq.
Lloyd, William, Esq. 140, *New Bond-street*
Loat, Mr. Samuel, 24, *Edward-square, Kensington*
Lockwood, Anthony, Esq. *Canada*
Long, Mr. Charles
Long, Mr. Richard, 217, *High Holborn*
Long, Walter, Esq. *Preshaw-house, Hants, and* 52, *Montague-square*

Lott, Mr. Henry, 63, *Long Acre*
§ Lott, T. Esq. 38, *Bow-lane, Cheapside*
Lovell, Mr. George, 3, *Wilmot-street, Brunswick-square*
Low, Mr. Robert, 330, *Strand*
Lowe, George, Esq. *Gas Company, Brick-lane*
Lowther, Mr. Thomas Nicholas, 58, *Red Lion-street, Clerkenwell*
Lund, Mr. Thomas, 57, *Cornhill*
Lumley, William, Esq. (Chairman of the Committee of Accounts), 1, *Sidmouth-place*
Lyon, Mr. John, *Nassau-street, Middlesex Hospital*

M

* Macclesfield, George, Earl of, F.R.S. F.H.S. 9, *Conduit-street, and Sherborne-castle, Oxfordshire*
* Malmsbury, James Edward, Earl of, *Heron-court, Hants*
Mansfield, Earl of, F.R.S. F.S.A. M.R.I. *Caen Wood, Middlesex*
§ Manvers, Charles, Earl, 36, *Portman-square, and Thoresby-park, Notts*
§ Mountnorris, George, Earl of, F.R.S. F.S.A. F.L.S. *Arley-hall, near Bewdley*
§ Monkton, Hon. Edward, 46, *Portland-place*
Macgregor, Sir Evan Murray, Bart. *Clan Gregor Castle, Perthshire*
§ Morgan, Sir Charles, Bart. M.P. F.H.S. 70, *Pall-mall, and Tredegar-house, Monmouthshire*
Murray, the Hon. George, Major-General, 4, *Upper Seymour-street, Portman-square*
§ Mac Adam, James, Esq. *Whitehall-place*
Mac Arthur, John, Esq. *Stone-buildings, Lincoln's-inn, and* 9, *Mansion-house, Albany*
M'Cormick, William, Esq. 17, *Upper Gower-street*
§ Macgilray, Simon, Esq. *Suffolk-lane, City*
Machell, John, Esq. *Low Plains, near Penrith*
Machin, Mr. Nathaniel, *King-street, Covent-garden*
Mackenzie, Mr. John, 30, *Brydges-street, Covent-garden*
Mackintosh, Ewen, Esq. *Haymarket*
Macklew, Edward, Esq. 83, *Piccadilly*
Macpherson, Richard, Esq. 76, *Lombard-street*
M'William, Robert, Esq. 12, *Torrington-square*
Magrath, Mr. Edward, 12, *Waterloo-place, Pall-mall*
Mainwaring, Mr. John, *Chichester-rents, Lincoln's-inn*
Manwaring, Mr. William, *Marsh-place, Lambeth*
§ Maitland, Ebenezer Fuller, Esq. F.S.A. 11, *Bryanstone-sq.*
Mallcott, Mr. John, 12, *Newgate-street*

Malleson, Rev. I. P. B.A.
§ Manley, Admiral J. C. *Wallingford*
Mann, Mr. William Henry
Manning, Mr. Richard, 11, *High-street, Borough*
Mansfield, James, Esq. *James-street, Bedford-row*
Marreco, A. J. Freire, Esq. 26, *New Broad-street, and Cintra-cottage, Stoke Newington*
Marsack, Lieut.-Col. *Caversham-park, Reading*
Marsack, Edward Claude, Esq.
Marsden, Robert, Esq. 14, *Hanover-terrace, Regent's-park*
§ Martin, Henry, Esq. *Ashfield-lodge, near Bury St. Edmund's*
§ Martin, John, Esq. M.P. *Lombard-street*
Martin, John, Esq. 30, *Alsop's-buildings*
Mason, I. F. Esq. *Aldenham-lodge, St. Alban's*
§ Mason, Mr. William, 6, *Margaret-street, Cavendish-square*
Matthews, Mr. Luke (*abroad*)
Maudslay, Henry, Esq. *Cheltenham-place, Westminster-road*
Maudslay, Thomas, Esq. *Cheltenham-place, Westminster-road*
Mawley, Henry, Esq. 27, *Lower Thornhaugh-street*
§ Mayne, John Thomas, Esq. F.R.S. and F.S.A. *Teffont-house, Salisbury*
Medcalf, Robert, Esq. 109, *Chancery-lane*
Meheux, John, Esq. F.S.A. 52, *Hans-place, Sloane-street*
§ Menzies, John, Esq. *Pittfoddles, near Aberdeen*
Merle, Mr. J. G.
§ Merle, Wm. Henry, Esq. 9, *Park-street, Westminster*
Merrifield, John, Esq. 4, *Elm-court, Temple, and* 61, *Nelson-square*
§ Meyer, C. P. Esq. *Enfield, Middlesex*
Middleton, Mr. James, 15, *Great St. Thomas Apostle*
Middleton, William, Esq. 3, *Adam-street, Adelphi*
Midgley, G. D. Esq. 49, *Strand*
Midgley, Mr. George Reuben, 49, *Strand*
Miers, Mr. John, *South America*
Miller, Mr. George, 152, *Strand*
Miller, Giles, Esq. *Gouldhurst, Kent*
§ Miller, John, Esq.
Miller, Mr. J. H. 158, *Regent-street*
Milliken, Mr. J. 301, *Strand*
Millington, John, Esq. F.L.S. 36, *Bloomsbury-square*
Mills, Mr. John, 5, *Holywell-street*
Mills, Samuel, Esq. 20, *Russell-square*
Mills, T. Esq. 19, *Finsbury-place*
Mills, Mr. William, 120, *High Holborn*
Minchin, Thomas, Esq. 3, *Verulam-buildings*
Minier, William, Esq. F.H.S. 3, *Adelphi-terrace*
§ Minshull, William, Esq. *Kentish-town*

Mitchell, Mr. William, *Tyne Mercury, Newcastle*
§ Mitford, George, M.D. *Bertram-house, Berks*
Monro, Robert, Esq. *Busbridge-park, near Godalming*
Moody, James, Esq. 33, *Hunter-street, Brunswick-square*
Moore, Mr. C. *Commercial-road, Lambeth*
§ Moore, George, Esq. F.S.A. F.L.S. M.R.I. 64, *Lincoln's-inn-fields*
Moore, Henry Glover, Esq.
Moore, Thomas, Esq. F.S.A. *Hendon, and* 2, *York-terrace, Regent's-park*
Moorman, Mr. Thomas, 16, *Old-street*
Morant, George, Esq. 95, *Wimpole-street, Cavendish-square*
Mordan, Mr. Sampson, *Castle-street, City-road*
Morel, Dominique, Esq. 2, *Golden-square*
Morgan, Thomas, Esq. 13, *Savage-gardens*
Morris, Charles, Esq. 10, *Portman-square*
Morris, Joseph, Esq. 24, *Northumberland-street*
§ Morrison, James, Esq. *Portland-place*
Morson, Mr. Thomas, *Southampton-row, Russell-square*
Mott, Mr. George, 20, *Essex-street, Strand*
Mount, Richard, Esq. *Laytonstone*
Mudford, William, Esq.
Mudge, Richard, Captain Royal Engineers, *Tower*
Munday, George, Esq. *Old Ford, Middlesex*
Murray, James, Captain, 35, *Soho-square*
Murray, John, Esq. *Albemarle-street*
§ Myers, Thomas, Esq. 4, *Tilney-street, May-fair*

N

§ Norfolk, Bernard Edward, Duke of, F.R.S. F.S.A. F.H.S. *St. James's-square, and Arundel-castle, Sussex*
** Northumberland, Hugh, Duke of, (V.P.) K.G. F.R.S. F.S.A. *Northumberland-house, Charing-cross; Sion-house, Middlesex; and Alnwick-castle, Northumberland*
Northesk, William, Earl of, *Rose-hill, Winchester*
Naylor, Thomas, Esq. *Newport-street*
Nelson, John Wood, Esq. 37, *Mecklenburgh-square*
Newbery, George John, Esq. 24, *Buckingham-place, Fitzroy-square*
Newcomb, William, Esq. 190, *Fleet-street*
Newsom, Mr. Jos. Wm. Percy, *Gracechurch-street*
Newton, Alexander L. Esq. 4, *Bury-street, St. Mary Axe*
§ Newton, Andrew, Esq.
Newton, Mr. William, 66, *Chancery-lane*
Newton, Mr. William, 12, *St. Paul's-church-yard*
Newton, Mr. William, jun. 228, *Piccadilly*

Neyva, Joseph da Cunha Pereira
Niblet, John, Esq.
Nichols, Mr. Nathaniel, *Bethlem Hospital*
Nicol, Robert, Esq. 88, *Queen-street, Cheapside*
Nimmo, A. Esq. *Dublin*
Noble, Mr. John, 26, *Ivy-lane, and* 2, *Crescent, New Bridge-street*
Noble, E. M. Esq. *Great Surrey-street, Blackfriars*
Nockolds, Martin, Esq. *Wood-house, Stanstead, near Bishop Stortford*
Nonnen, John, Esq. F.H.S. *Gottenburg*
§ Norris, John, Esq. *Hughenden-house, High Wycomb, Bucks*
Northall, Mr. W. K.
Nowell, Alexander, Esq. *Underley-park, near Kirby Lonsdale, and* 43, *Wimpole-street*
Nugent, Mr. T. V.
Nurse, William Mountford, Esq. *Cumberland-terrace, Regent's-park*

O

Ommanney, Sir Francis, M.P. 21, *Norfolk-street, Strand*
§ Oakley, Benj. Esq. F.H.S. 1, *North-side, Royal Exchange*
O'Bryen, Dennis, Esq. *Craven-street*
O'Connell, M. D. Esq. *Merrion-square, Dublin*
Ody, Mr. John, 292, *Strand*
Ogle, John, Esq. *Camden-cottage, Notting-hill*
O'Kelly, Colonel
§ Olive, Jeremiah, Esq. 4, *York-terrace, Regent's-park*
Orlando, John, Deputy from Greece, &c. &c. &c. (*abroad*)
Owen, Mr. Thomas, 21, *Great Russell-street, Covent-garden*

P

§ Portland, William Hen. Duke of, F.R.S. & S.A. *Harcourt-house, Cavendish-square, and Bolsover-castle, Derby*
** Prudhoe, Algernon, Lord, F.R.S. (*abroad*)
Peel, Right Hon. Robert, M.P. *Whitehall*
* Peel, Sir Robert, Bart. *Drayton-park, Tamworth*
Philippart, Sir John, K.G.V. K.P.S. M.R.I.A. M.R.A.S. *War-office*
Prescott, Sir George, Bart. *Theobald's-park, Herts*
§ Page, Frederick, *Newbery, Berks*
Paget, John Warren, Esq. 5, *Quality-court, Chancery-lane*
Palmer, H. R. Esq. *Engineer's-office, London-docks*
Palmer, William Henry, Esq. 24, *Bedford-row*
Palmer, George Holworthy, Esq. *Royal Mint*
Palmer, Samuel, Esq. *St. George's-place, Walworth*

Parke, Henry, Esq. 90, *Dean-street, Soho*
Parker, Mr. J. C. 25, *Whitcomb-street*
Parker, Mr. Samuel, jun. 35, *Argyll-street*
Parker, Samuel, Esq. *Redruth, Cornwall*
Parker, Thomas, Esq. 74, *Great Russell-street, Bloomsbury*
Parker, Thomas, Esq. *King's-mews, Pimlico*
Parker, Mr. William, 19, *North-bank, Regent's-park*
Parkes, Josiah, Esq. *Warwick*
Parkin, Mr. Richard, 40, *Bedford-street, Strand*
Parkins, William, Esq. *Adelphi-wharf*
Parminter, George, Esq.
Pattisall, Stephen, Esq. *Change-alley*
§ Paynter, John, Esq. 64, *Coleman-street*
Peachey, General, *Yarmouth, Hants*
§ Peacock, Mr. William, 18, *Salisbury-square*
Pearsall, James, Esq. 145, *Cheapside*
Pearson, Rev. William, LL.D. & F.R.S. *East Sheen, Surrey*
Pechell, John, Esq. Captain R.N.
Peel, Jonathan, Esq. *Acrinton, Lancashire*
Pellat, Apsley, Esq. 16, *St. Paul's Church-yard*
Penn, John, Esq. F.H.S. 10, *New-street, Spring-gardens, and Stoke-park, Buckinghamshire*
Penn, Richard, Esq. F.R.S. 5, *Great George-street, Westminster*
Pennington, Mr. *Camberwell*
§ Pepys, John, Esq. 8, *Lower Berkeley-street*
Pepys, William H. Esq. F.R.S. F.H.S. 24, *Poultry*
§ Percival, Richard, jun. Esq. F.S.A. 76, *Lombard-street*
§ Perin, W. P. Esq. F.R.S. F.S.A.
Perring, Richard, Esq. *Devonport, Devon*
Perkins, Mr. Angier March, 69, *Fleet-street*
Perkins, Jacob, Esq. 69, *Fleet-street*
Perry, Mr. Ebenezer, 39, *Spencer-street, Northampton-square*
§ Perry, Philip, Esq. 50, *Upper Harley-street*
§ Petit, Louis Hayes, Esq. F.R.S. F.S.A. F.L.S. 9, *Lincoln's-inn*
Peto, Henry, Esq. 31, *Little Britain*
§ Pettiward, Roger, Esq. F.R.S. F.S.A. F.L.S. F.H.S. 127, *Park-street, Grosvenor-square*
Peyton, Richard, Esq. 10, *Cook's-court, Carey-street, Lincoln's-inn*
Pfeiffer, Andrew, Esq. 5, *Woburn-place*
Pfeil, Adolphus Leopold, Esq. *Broad-street, Bloomsbury*
Phillips, Charles, Capt. R.N.
Phillips, Mr. John, 4, *Bishopsgate-street-without*
Phillips, Mr. Leonard, jun. *Wandsworth-road, near Vauxhall*
Phipps, John, Esq. 19, *Buckingham-street, Strand*
Pillar, James, Esq. 13, *Moor-place, Lambeth*
§ Pincent, Joseph, Esq.

Pindar, W. M. Esq. *West Indies*
Piper, Mr. Thomas, 42, *Little Eastcheap*
Pitcher, Henry Jones, Esq. *Rookery, Northfleet, Kent*
§ Pitt, Thomas, Esq. F.S.A. F.H.S. 41, *Wimpole-street*
Pix, Thomas, Esq. *Peasmarsh, Sussex*
Platt, James, Esq. 11, *Boswell-court*
Plumptre, E. H. Esq. 4, *Lamb's-buildings, Temple*
§ Pocknell, Thomas, Esq. *Greenwich, and Stock Exchange*
Poland, Mr. P. 351, *Strand*
Poland, William Henry, Esq. 21, *Bow-lane, Cheapside.*
Pole, Wm. Esq. 3, *Stone-buildings, Lincoln's-inn*
Polhill, Edward, jun. Esq. 30, *York-place, Portman-square*
§ Pollock, David, Esq. (V.P.) M.R.A.S. M.R.S.L. 40, *Lincoln's-inn-fields*
Poole, Moses, Esq. *Patent-office*, 4, *Old-square, Lincoln's-inn*
Povah, Mr. John, 39, *Red-lion-street, Holborn*
Powell, John, C. Esq. 18, *Little St. Helen's-place*
§ Powell, Richard, M.D. F.S.A.
§ Powell, Richard Jones, Esq. *Hinton-court, near Hereford*
§ Prado, Samuel, Esq. 21, *Grafton-street, Bond-street*
Pratt, Edward Roger, Esq. *Royston-house, Norfolk*
Pratt, Samuel, Esq. *New Bond-street*
Preston, Richard, Esq. 6, *New-square, Lincoln's-inn*
Preston, Thomas, Esq. 19, *Nottingham-place*
Price, Mr. Charles, 221, *Strand*
Price, Henry H. Esq. *Neath-abbey, South Wales*
Prickett, George, Esq. 5, *Seymour-place, Euston-square*
Prior, Edward, Esq. *Great Winchester-street, Old Broad-st.*
Pritchard, Octavius, Esq. M.D. *Chelmsford, Essex*
Provis, W. A. Esq.
Pryor, Mr. William Squire, 23, *Broad-street-buildings*
Pullen, John, jun. Esq. 34, *Fore-street, Cripplegate.*

Q

Quick, Mr. Samuel, *Park-road, Regent's-park*

R

** Radnor, Wm. Earl of, (V.P.) M.A. F.R.S. F.S.A. 52, *Lower Grosvenor-street, and Longford-castle, near Salisbury*
§ Romney, Charles, Earl of, (V.P.) F.R.S. *Mote-park, Kent*
§ Radclyffe, Sir Joseph, Bart. *Campsall-park, Doncaster*
§ Rawlins, Sir William, 44, *Liverpool-street, New Broad-street*
Rainbow, Mr. Joseph M. *New Bridge-street, Blackfriars*
Rainer, Peter, Esq. *Albany*

Rainy, Alexander, Esq. 8, *Berkeley-square*
Rainy, Mr. George
§ Ramey, John, Esq. *Ormsby, Norfolk*
Ramsden, Mr. Richard, 7, *Brook-street, Holborn*
Ramshaw, Mr. James, 33, *Fetter-lane*
§ Randell, George, Esq. *Bagnigge-wells*
Read, Mr. William, 37, *King-street, Covent-garden*
Rees, Mr. John
Reeves, John, Esq. F.R.S. F.S.A. *Parliament-place*
Reeves, John, Esq. F.R.S. F.L.S. *Canton*
Reeves, J. R. Esq. *Peckham, Surrey*
Reid, John, Esq. 26, *Aldersgate-street*
Reid, Mr. J. *Walnut-tree-walk, Lambeth*
Reid, Thomas, Esq. *Edinburgh*
Rentzsch, Mr. Sigismund, *George-street, St. James's-square*
§ Reveley, George, Esq. 17, *Queen-square, Bloomsbury*
§ Reveley, George Johnson, Esq. 17, *Queen-sq. Bloomsbury*
§ Reveley, Wm. Austin, Esq. 17, *Queen-square, Bloomsbury*
§ Reveley, Henry Willey, Esq. *Cape of Good Hope*
Reynolds, C. E. Esq. 96, *St. John-street*
Reynolds, Samuel, Esq. *Bayswater*
Rhodes, Henry, Esq. 26, *Margaret-street, Cavendish-square, and Bolabee-castle-farm, Whitchurch, Bucks*
Rich, Robert, Esq. *Dockhead*
Richardson, Mr. Philetus, *Brewery, Chiswell-street*
§ Richardson, William Henry, Esq. 72, *Great Portland-street*
Richman, Mr. Edmund Charles, *Regent-street, Westminster*
Richman, Mr. Francis, *Regent-street, Westminster*
Ricketts, Mr. Charles, *Castle-court, Strand*
§ Rigaud, S. Esq. M.A. F.R.S. Fellow of Exeter College, Oxford, *Richmond*
Rigby, Mr. James, 8, *Charing-cross*
Rigby, Mr. Joshua
§ Ring, Thomas, Esq. *Reading*
Rintoul, Mr. Wm. 5, *Great Newport-street*
Risden, J. Esq. 5, *Lansdown-place*
Rivington, John, Esq. 62, *St. Paul's Church-yard*
Robarts, Mr. Henry, 23, *Bedford-street, Strand*
Robarts, Nathaniel, Esq. *Chandos-street, Covent-Garden*
Roberts, Thomas, Esq. *Brook-house, Chester*
Robertson, Mr. Charles John, *Little Chiswick*
§ Robins, Greenway, Esq. 1, *Crosby-row, Walworth*
§ Robinson, Charles, Esq. 36, *Highbury-place*
Robinson, Joseph Ogle, Esq.
Robinson, Mr. Joshua, *Paddington*
Robinson, W. T. Esq. 6, *Austin-friars*
Robson, Mr. John, 2, *Great Marlborough-street*

Rodger, Mr. William, Lieut. R.N.
§ Rogers, Edward, Esq. M.P. 17, *Regent-street*
§ Roget, P. M., M.D. F.R.S. 39, *Bernard-street*
Ronalds, Francis, Esq. *Croydon, Surrey*
Rooke, Mr. C. A. 25, *Little St. Andrew's-street*
Rooke, W. B. Esq.
Roscoe, William, Esq. F.L.S. *Liverpool*
Rose, Mr. John, 4, *Newcastle-street, Strand*
Rotch, Benjamin, Esq. 1, *Furnival's-inn*
Rothwell, Mr. 2, *Upper Thornhaugh-street*
Rowe, J. P. Esq. *Brighton*
Rowed, Henry, Esq. 4, *Upper Belgrave-place, Pimlico*
§ Royds, John, Esq. 107, *Gloucester-place*
Ruck, John, Esq. 19, *St. Dunstan's-hill*
Runnington, James, Esq. *Hillsborough, Yorkshire*
§ Rush, George, Esq. *Elsingham-hall, Bishop's Stortford*
§ Russel, J. Watts, Esq. M.P. F.R.S. F.S.A.
Russell, Mr. Thomas, *Ironmonger-lane*
Rutt, Mr. Wiliam, *Hackney*
Ryde, Henry Thomas, Esq.

S

§ Sussex, His Royal Highness the Duke of, K.G. &c. (President), *Kensington-palace*
* Shrewsbury, John Talbot, Earl of, 7, *Great Stanhope-street, May-fair*
** Stafford, George, Marquess of, (V.P.) K.G. *Cleveland-house, and Trentham-hall, Stafford*
* Stanhope, Philip Henry, Earl of, *Chevening-place, Kent, and Mahon-house, Devon*
Suffield, Lord, *Vernon-house, Park-place*
Simpson, the Hon. J. B.
§ St. Aubyn, Sir John, Bart. F.R.S. F.S.A. F.L.S.
Shuckburgh, Sir Francis, Bart. F.R.S. *Pavilion, Han's-place, and Shuckburgh-park, Warwickshire*
§ Smith, Sir W. S. K.C.B. K.C. K.F. F.R.S. F.S.A.
§ Smart, Sir George, 91, *Great Portland-street*
Sangster, Mr. Samuel, 94, *Fleet-street*
Sass, Henry, Esq. (Chairman of the Committee of Miscellaneous Matters), 6, *Charlotte-street, Bloomsbury*
Satchwell, George, Esq. *Ordnance-office, Pall-mall*
Saunders, James Ebenezer, Esq. *Lawrence Pountney-lane*
§ Saunders, John, Esq. 57, *Cannon-street*
§ Saunders, Thomas, Esq. *New Park-street, Bankside*
Savage, James, Esq. (Chairman of the Committee of Polite Arts), 31, *Essex-street, Strand*

Sawyer, Robert H. Esq. 2, *Staples-inn*
Schmalcalder, Mr. Charles, *Strand*
Schmidt, Mr. George Frederick, 36, *Great Russell-street, Bloomsbury*
Scholey, George, Esq. Alderman, *Old Swan-stairs*
Scoles, Joseph John, Esq. 12, *Regent-street*
Scott, Henry D. Esq. 6, *Fludyer-street*
Scott, Robert, Esq. *Stockwell*
Seabrook, Mr. Isaac, 78, *Hatton-garden*
Seale, Gregory, Esq.
Seally, Henry, Esq. *East India-house*
§ Selby, Henry C. Esq. 4, *Verulam-buildings*
Sellon, Mr. John, (*abroad*)
Serancke, Francis, Esq. *St. Alban's*
§ Sex, Edward, Esq. *Stock-exchange*
§ Seymour, William, Esq. 19, *Margaret-street, Cavendish-sq.*
Shand, Mr. W. *Buckingham-street, Strand*
Sharpe, J. B. Esq.
Shaw, John, Esq. 4, *King-street, Cheapside*
Shaw, Samuel, Esq. *Brunswick-square*
Shawe, Capt. F. 48, *Park-street, Grosvenor-square*
Shears, Mr. Daniel, *Bankside*
Sheldrake, Mr. William, 483, *Strand*
Sheppard, Thomas, Esq. *Hampstead-heath*
Shirley, T. Esq. 5, *Chatham-place*
Shirreff, E. D. Esq. 25, *Edward-street, Portman-square*
§ Shore, Offley, Esq. *Norton, Derbyshire*
§ Shore, Samuel, Esq. *Norton-hall, Derbyshire*
§ Shore, Sidney, Esq. *Sherwood-hall, Notts*
Shuldham, M. Lieut. R.N. 2, *Brunswick-cottages, Lewisham-road, near Deptford*
§ Shuter, T. Allen, Esq. *St. John's, Southwark*
Sich, Henry, Esq. *Chiswick*
Sidney, R. C. Esq. 5, *Mortimer-street*
Siebe, Mr. Augustus, 69, *Prince's-street, Leicester-square*
Silk, Mr. Robert, *Long Acre*
Silvester, Mr. Richard William, 27, *Strand*
Simmons, William, Esq. *Wales*
Simms, William, Esq. 136, *Fleet-street*
Simpkin, William, Esq. 83, *Great Surrey-street*
Simpson, William, Esq. 15, *Nottingham-place, Mary-le-bone*
Simpson, Mr. George, 8, *Union-buildings, Leather-lane*
Sims, William, Esq. 31, *Newman-street*
Sinclair, John, Esq. *Hartshill, near Atherstone, Warwickshire*
Singleton, Henry, Esq. 21, *Piazza, Charles-street, St. James's*
Skegg, Mr. Edward, *John-street, Adelphi*

Skegg, Mr. Edward, jun. *John-street, Adelphi*
Skelton, Mr. Douglas, *Wadebridge, near Bodmin, Cornwall*
Skelton, W. Esq. *Stafford-place, Pimlico*
Sketchley, S. E. Esq. 21, *Lower Phillimore-pl. Kensington*
Skinner, Mr. William, 101, *High Holborn*
Skynner, John, Esq. 4, *Lincoln's-inn*
Slade, Mr. John, 57, *Hatton-garden*
Slade, J. M. Esq. *Chatham*
Smallbones, Mr. George, *Bath-place, New-road*
§ Smart, George, Esq. *Pedlar's-acre*
§ Smart, Mr. John
Smart, John, Esq. 7, *Milk-street, Cheapside*
Smart, William Thomas, Esq. 7, *Milk-street, Cheapside*
Smee, Mr. William, jun. *Pavement, Moorfields*
Smirnove, Rev. James, 32, *Welbeck-street*
Smith, C. Esq. *Preston, Ferrybridge*
§ Smith, Mr. C. H. *Portland-road*
Smith, Charles Josephus, Esq. *Little Preston, Ferrybridge*
Smith, Mr. Henry Gilbert, (*abroad*)
§ Smith, James Scott, Esq. *Whitechapel Distillery*
§ Smith, John, Esq. *Revel-end, Herts, and* 41, *Bedford-row*
§ Smith, John Spencer, Esq. LL.D. F.R.S. F.S.A.
Smith, Mr. J. 34, *Trinity-square*
Smith, Mr. J. C.
Smith, Robert, Esq. *Aberavon Iron-works, Glamorganshire*
Smith, Robert, Esq. F.R.S. F.S.A. 18, *Austin-friars*
§ Smith, Robert Peter, Esq.
Smith, Thomas, Esq. 45, *Camden-street, Camden-town*
Smith, Thomas, Esq. *British Museum*
Smith, Walker, Esq. *Little Preston, Ferrybridge*
§ Snodgrass, Thomas, Esq. M.R.I. 10, *Chesterfield-street, May-fair*
Snow, Mr. John Row, 24, *Princes-street, Leicester-square*
§ Solly, Richard Horsman, Esq. F.R.S. F.S.A. F.H.S. M.R.I. (Chairman of the Committee of Correspondence and Papers), 48, *Great Ormond-street*
§ Solly, Isaac, Esq. *St. Mary-axe*
§ Solly, Thomas, Esq. *St. Mary-axe*
Sotheby, Mr. Samuel, 3, *Wellington-street, Strand*
Southgate, Mr. Samuel, *Gate-street, Lincoln's-inn-fields*
Soulsby, Mr. John, *Milford-lane, Strand*
Sowerby, James, Esq.
Speer, Edward, Esq. *Treasury, Whitehall*
Spenlove, John Francis, Esq. *Abingdon, Berks*
Spilsbury, Francis Gybbon, Esq. *Leek, Staffordshire*
Spring, Mr. William, 83, *Great Portland-street*
§ Spurrier, Isaac, Esq.

Stables, David Henry, Esq. 7, *Hatton-garden*
Stagg, Robert, Esq. *Middleton-house, Teesdale*
Stallard, Samuel F. Esq. 40, *Burton-crescent*
Stanborough, Charles, Esq. *Isleworth*
Stanfield, Clarkson, Esq. *Buckingham-street, Strand*
Staples, Samuel, Esq. 1, *Staples-inn*
§ Stapylton, M. Esq. *Myton-hall, Boroughbridge*
§ Staunton, Mr. M. *Strand*
Steele, Alex. Esq.
Stephens, Mr. Benjamin, *Serle's-place, Carey-street*
Stephens, James, Esq. *Camerton-house, near Bath*
§ Stephenson, Rowland, Esq. *Farley-hill, Berks*
Stephenson, Rowland, Esq. *Marshall's, near Romford*
Stevens, Mr. Thomas, jun. *Drury-lane*
Stewart, Mr. Chas. *United University Club, Pall-mall East*
Stodart, Mr. Adam, *Clapton*
Stodart, Mr. David, *Strand*
Stone, Mr. James, 18, *Warwick-street, Golden-square*
Storey, Mr. W. jun. *Mount-street, Grosvenor-square*
Storr, P. Esq. *Harrison-street, Gray's-inn-road*
Strutt, G. B. Esq. *Derby*
Strutt, Joseph, Esq. *Derby*
Strutt, William, Esq. F.R.S. F.H.S. *Derby*
Stuart, Mr. Charles, *Consol-office, Bank*
Stubbs, Mr. Francis Perry, 50, *Long-acre*
Stuckey, Benjamin, Esq. *St. Petersburgh*
Sturch, William, Esq. 21, *York-terrace, Regent's-park*
Sturgis, Samuel, Esq. 33, *Lincoln's-inn-fields*
Sumerfield, Thomas B. Esq. *Vauxhall*
§ Sutton, Robert, Esq. 7, *Castle-alley, Cornhill*
Sweet, S. W. Esq. *Basinghall-street*
Swift, Mr. Edward, *Walsall, Staffordshire*
Swinney, Mr. Francis, 13, *Hyde-street, Bloomsbury*
Sykes, Godfrey, Esq. 7, *Powis-place, Ormond-street*
Symmons, Mr. Henry, *Great Peter-street, Westminster*
Symmons, J. Esq. F.R.S. F.S.A. F.L.S.
Syms, Frederick George, Esq. *Craven-street*

T

Turnour, Edward, Viscount, *Rose-cottage, St. John's-wood-place, Regent's-park*
Turnour, Viscountess, *ditto*
§ Talbot, Thos. Mansfield, Esq. *Penric-castle, Glamorganshire*
Tapster, Mr. Thomas, *the Quadrant, Regent-street*
Tatham, Thomas James, Esq. 27, *Bedford-place*
Taylor, Edward, Esq. *Robert-street, Adelphi*

Taylor, George, Esq. *Scotland-yard*
Taylor, George Lidwell, Esq.
Taylor, Mr. James
Taylor, James William, Esq. *East Indies*
§ Taylor, John, Esq. 11, *St. George's-place, Hyde-park-corner*
Taylor, John, Esq. 12, *Bedford-row*
Taylor, Philip, Esq.
Taylor, Samuel, Esq. *Morton, near Manchester*
Taylor, Mr. W. G. 12, *Old Jewry*
Taylor, John Henry, Esq. 22, *Parliament-street*
Tebbs, George, Esq. 163, *Old Bond-street*
Telford, Thomas, Esq. 24, *Abingdon-street*
§ Templer, James, Esq. *Stover-lodge, Devon*
Tennant, Christopher, Esq. *Lloyd's Coffee-house*
Tennant, George, Esq. 62, *Russell-square*
§ Tennant, James, Esq. *Russell-place, Fitzroy-square, and Stanmore, Middlesex*
Tennyson, Charles, Esq. M.P. (V.P.) M.A. F.R.S. F.A.S. 4, *Park-street, Westminster*
Terry, Mr. Thomas Leighton, 87, *Cornhill*
Test, Thomas, Esq. 7, *Leicester-place*
Thatcher, Mr. John George, *Dartmouth-street, Westminster*
Thomas, H. L. Esq. F.R.S. 12, *Leicester-place*
Thomas, William B. Esq. *Chesterfield, Derby*
Thomas, Israel, Esq. 20, *Cornhill*
Thompson, John, Esq. *Duke-street, York-buildings*
Thompson, John, Esq. 65, *St. Paul's Church-yard*
Thompson, Mr. John Thomas, 116, *Long-acre*
§ Thompson, Nathaniel, Esq. *Holloway*
Thompson, Richard, Esq.
Thompson, Mr. Robert, 6, *Canonbury-lane, Islington*
§ Thompson, R. G. Esq. *Kirby-hall, near Boroughbridge*
§ Thornton, Louis Edmund, Esq. F.LS.. 91, *Norton-street, Fitzroy-square*
§ Thornton, Samuel, Esq. M.P. F.A.S. 205, *Regent-street*
Thornton, Stephen, Esq. 10, *Harley-street*
Thorold, Richard, Esq. *Weelsby, Lincolnshire*
Thoyts, William, Esq. *Southampstead, Berks*
Thurston, Mr. J. *Catherine-street, Strand*
Till, Richard, Esq. 18, *Aldermanbury*
§ Todd, James Ruddell, Esq. 11, *John-street, Adelphi*
Todd, John Edward, Esq. 36, *Bedford-place*
Todd, Thomas, Esq. 6, *Lancaster-place*
Tomlinson, N. Captain R.N. 36, *Dorset-square, Regent's-park*
Tooke, Thomas, Esq. F.R.S. 7, *Richmond-terrace, Whitehall*
§ Tooke, William, Esq. (V.P.) F.R.S. 12, *Russell-square*
Train, Mr. Edward, 35, *Princes-street, Soho*

Trery, William, Esq. 8, *Church-street, Lambeth*
Tribe, Mr. J. *Chatham, Kent*
Triscott, Samuel, jun. Esq. *Island of Ascension*
Trotter, Alexander, Esq. *Osnaburg-street, Regent's-park*
Trotter, John, jun. Esq. 43, *Grosvenor-street, Grosvenor-sq. and Horton-place, Epsom, Surrey*
Trotter, John, jun. Esq. Lieutenant 2d Life Guards, 13, *Connaught-place, Hyde-park*
Truman, Mr. Henry, *Gas-works, Brick-lane*
Tuck, Mr. Robert
§ Tunstall, Marmaduke, Esq. F.R.S. F.S.A. *Wycliffe, Yorkshire*
Turner, Frederick, Esq. 5, *Bloomsbury-square*
Turpin, James, Esq. *Commercial-road, Lambeth*
* Turton, Edmund, Esq. *Brasted-place, Kent*
Twining, George, Esq. (Chairman of the Committee of Colonies and Trade), *Strand*
Twining, Richard, Esq. 34, *Norfolk-street*

U

Underwood, Mr. Henry
§ Uwins, Thomas, Esq. *Rome*

V

§ Vernon, the Hon. G. *Sudbury Hall, Derbyshire*
Vacher, Mr. T. B. 29, *Parliament-street*
Valle, Anthony Barto, Esq. 21, *Haymarket*
§ Valpy, Rev. Richard, D.D. F.S.A. *Reading, Berks*
Varley, Mr. Cornelius, 46, *Holywell-street, Milbank*
Vaughan, Petty, Esq. 70, *Fenchurch-street*
Vaughan, William, Esq. F.R.S. 70, *Fenchurch-street*
Venables, William, Esq. (Alderman) *Queenhithe*
Vendramini, John, Esq. 14, *Brompton-row*
Verrall, Richard, Esq. 10, *Harcourt-buildings, Temple*
Vincent, George, Esq.
Vine, James, Esq. 8, *Grenville-street, Brunswick-square*
Virtue, Mr. George, 26, *Ivy-lane*
Vulliamy, B. L. Esq. 74, *Pall-mall*

W

Waterpark, Richard, Lord, F.S.A. *Doveridge, Uttoxeter, Staffordshire*
§ Willoughby de Broke, Henry, Lord, 21, *Hill-street, Berkeley-square*
Webb, Sir John, Bart. F.R.S. F.S.A.

Wynne, Sir Watkin W. Bart. M.P. F.R.S. F.H.S. *St. James's-square, and Wynnstay*
Wilson, Sir Henry Wright, *Chelsea*
Wynne, Sir William, *Bath*
§ Walker, Sir Patrick, *Edinburgh*
Wagner, Mr. Charles, (*abroad*)
Wainewright, Robert, Esq. 3, *Gray's-inn-square*
Wakeford, William, Esq.
Walker, James, Esq. *Limehouse*
Walker, Mr. Jas. *William-street, Bridge-street, Blackfriars*
§ Walker, Thomas, Esq. *Bury-hill, Notts*
Walker, Thomas, Esq. 4, *John-street, Bedford-row*
Walker, William, Esq. *Stamford-hill*
Walker, William Jackson, Esq. *Bow-lane-cottage, near Poplar*
Wallis, John, Esq. *Bodmin, Cornwall*
§ Walshman, Thomas, M.D. *Kennington*
Walter, John, Esq. 4, *Symond's-inn*
Walter, Mr. John, jun. (*abroad*)
Warcup, Mr. William
Ward, John, Esq. 1, *Ludgate-street*
§ Ward, Wm. Esq. *Albany, and Trinity-college, Cambridge*
Ware, Samuel, Esq. F.S.A. 5, *John-street, Adelphi*
Ware, John Pardon, Esq. 43, *Blackman-street, Borough*
Warne, Mr. William, *Edward-street, Hampstead-road*
Warren, Mr. Ambrose, 10, *Chad's-row, Gray's-inn-road*
Warren, Mr. William, *Isleworth*
Wass, Rev. William, *Darton Vicarage, near Bewdley, Yorkshire*
Watson, John, Esq. *Preston, Lancashire*
Watson, W. H. Esq. *Whitchurch, Salop*
Watson, Thomas, Esq. *Aldermanbury*
Waymouth, Henry, Esq. 17, *Bryanstone-square*
Weatherby, Edward, Esq. *Newmarket*
Webb, George, Esq. 14, *Surrey-square*
Webb, John W. Esq.
§ Wedgwood, John, Esq. F.L.S. F.H.S. *Betley, Staffordshire*
Welland, Abm. Esq. *Southborough-lodge, Bromley, Kent*
§ Weldon, Walter, Esq. 97, *New Bond-street*
§ Wells, Mr. Jonah Smith, jun. 40, *Lothbury*
§ Wenham, Thomas, Esq.
Western, Charles C. Esq. M.P. *Felix-hall, Kelvedon, Essex*
Westley, Mr. Francis, *Friar's-street, Blackfriars*
Weston, Mr. John, 37, *Old Bond-street*
Weston, Mr. Thomas, 14, *South-street, Park-lane*
Weston, Miles, Esq. 10, *Gloucester-place, New-road*
Weston, Warwick, Esq. *Chatham-place, Walworth*

Westwood, Mr. Robert, 35, *Prince's-street, Soho*
Wheatstone, Mr. C. 436, *Strand*
Wheeler, Mr. John, *St. Bartholomew's-hospital*
Wheeler, Mr. Joseph, 92, *Tottenham-court-road*
Whipple, Mr. George, 102, *Goswell-road, Islington*
White, Mr. Andrew, 75, *Lamb's Conduit-street*
White, Mr. Edward, 9, *Greek-street, Soho*
White, H. C. Esq. *Corner-hall, Hemel Hempstead, Herts*
White, Lieut. Hammond, jun. R.N. U.S.C. *Charles-street, Haymarket*
White, John, Esq. F.H.S. *Cannon-row, Westminster, and Westbourne-green*
White, John, Esq. 20, *Charlotte-street, Bloomsbury*
White, Mr. Jonas, *Imperial-hotel, Covent-garden*
White, Mr. William, *Artillery-place, Finsbury*
§ White, William Arch. Armstrong, Esq. *College-street, Westminster*
Whitehead, William, Esq. *Little Cadogan-place*
Whitehurst, Charles Howard, Esq. 4, *Elm-court, Temple*
Whitlaw, Mr. Charles, 14, *Finsbury-place, South*
Whittaker, George, Esq. *Ave Maria-lane*
Whitton, W. R. Esq. *Whallon, Manchester*
Wickstead, Mr. John, 18, *Duke-street, Lincoln's-inn-fields*
§ Wigg, Francis, Esq. 11, *North-place, Gray's-inn-lane*
Wiggins, Matthew, Esq. *Bury-house, Rickmansworth, and* 130, *Piccadilly*
Wilberforce, William, Esq. *Highwood-hill, Middlesex*
Wilcox, F. Esq. *Slough, Bucks*
Wild, John, Esq. 7, *Martin's-lane, Cannon-street*
Wild, Thomas, Esq. 68, *Torrington-square*
Wilde, Thomas, Esq. Serjeant-at-Law, 69, *Guildford-street*
Wilde, Edward A. Esq. 10, *College-hill, City*
Wildman, Colonel Thomas, *Newstead-abbey, Notts*
Wilkinson, Charles, Esq. 16, *Bucklersbury*
Wilkinson, Jephtha Avery, Esq. *Chorley, Lancashire*
Wilkinson, Mr. Henry, 26, *Brompton-square*
Wilkinson, William, Esq. 53, *Old Broad-street*
Williams, John Copner, Esq. *Denbigh, North Wales*
§ Williams, Mr. Llewellyn, 4, *Old Bailey*
Williams, Mr. O. *Wales*
Williams, J. Esq. *Elm-grove, Mortlake*
Williams, J. L. L. Esq. 7, *New-square, Lincoln's-inn*
§ Williams, William, Esq. *Sherborne-castle, Dorset*
Williams, Mr. William, *Great St. Helen's*
Williams, Mr. Richard, 154, *High Holborn*

§ Williamson, Mr. Richard, 14, *Moore-place, New Bethlem, Lambeth*
Willimott, John, Esq. *Streatham-common*
§ Willis, William, Esq. 76, *Lombard-street*
Wilson, Mr. D. *Paris*
Wilson, Mr. Edward
Wilson, James, Esq. M.P. *Sneaton-castle, near Whitby, Yorkshire*
Wilson, Joseph, Esq. 30, *Milk-street, and Highbury-hill, Islington*
§ Wilson, Lestock Peach, Esq. 6, *Russell-place, Fitzroy-square*
§ Wilson, Richard, Esq. F.S.A. F.H.S. 47, *Lincoln's-inn-fields*
§ Wilson, Richard Percy, Esq. 47, *Lincoln's-inn-fields*
Wilson, Richard, Esq. *Moke, Stafford*
§ Wilson, Thomas, Esq. 12, *Montague-street, Portman-square*
Wilson, Mr. William, 18, *Duke-street, St. James's*
Winchester, Henry, Esq. *Buckingham-street, Strand*
Winkworth, Mr. Thomas, (Chairman of the Committee of Manufactures), 150, *Cheapside*
Windus, Thomas, Esq. F.S.A. *Stamford-hill*
§ Winne, Captain J. Lascelles
§ Winsor, Fred. Albert, Esq. 10, *John-street, Adelphi*
Winterbottom, John Frederick, Esq. *Magdalen-college, Oxford, and Tiled-barn-cottage, East Woodhay, Newbury, Berks*
Wisker, John, Esq. *Pottery, Vauxhall*
§ Wood, Edward, Esq. F.H.S. *Northumberland-street, Strand, and Hanger-vale, near Ealing*
Wood, Mr. James, 11, *Chandos-street, Covent-garden*
Wood, John, Esq. *Cardiff*
Wood, John, Esq. *Bartholomew-hospital*
§ Wood, J. W. Esq. *Bromley-common*
Wood, Lawrence Watson, Esq. *Stock Exchange*
Wood, Thomas, Esq. *Little St. Thomas Apostle*
Woolly, George, Esq. 62, *Bread-street*
§ Wright, Charles, Esq. 20, *Old Jewry*
Wright, J. Esq. *Market-Drayton, Shropshire*
Wright, Mr. Robert, 3, *Harpur-street, Red Lion-square*
Wyatt, Lewis, Esq. *Suffolk-street, Charing-cross*
§ Wyatt, W. H. Esq. *Maiden-lane, Queen-street*
Wyon, William, Esq. *His Majesty's Mint*

Y

Yarrel, Mr. William, 9, *Great Ryder-street, St. James's*
Yates, John Ashton, Esq. *Liverpool*

Yockney, Mr. Samuel F. *Torrington-square*
Yonge, Mr. George, 156, *Strand*
Youatt, Mr. Wm. 3, *Nassau-street, Middlesex-hospital*
Young, Florence, Esq. 143, *Borough*
Young, Mr. George Adam, 17, *Harpur-street, Red Lion-square*

Z

Zackary, M. M. Esq. F.H.S. *Adelphi-terrace, Strand, and Strand on the Green, Kew*

CORRESPONDING MEMBERS.

Lord Charles Henry Somerset.
Sir Galbraith Lowry Cole, K.G. C.B. &c. *Governor of the Cape of Good Hope*
Charles Baron Dupin, *Member of the Royal Academy of Science of Paris, &c. &c.*
Sir Peregrine Maitland, K.C.B. &c. *Lieutenant-Governor of Nova Scotia*
J. T. Bigge, Esq. *Commissioner of Inquiry into the State of the Colonies, Cape of Good Hope*
Sir Thomas Brisbane, K.C.B. &c.
James Henderson, Esq. &c. &c. &c. *British Consul-General, Colombia*
F. Forbes, Esq. &c. &c. &c. *Chief Justice of New South Wales*
Marie Claude Antoine Marrier, Baron de Mienville, *Ancient Captain of the French Navy, Knight of St. Louis, &c. &c. Paris*
Charles Telfair, *Paris*
Bibye Le Sage, *Paris*
Le Comte Charles Lasteyrie, *Vice-President of the Society of Paris for the Encouragement of National Industry*
Dr. Hamel, *Petersburgh*
N. Wallich, M.D. *Superintendant of the Botanic Garden, Calcutta*
The Chevalier Molard, *Member of the Royal Academy of Sciences, Paris*
M. Belot de Saril, *Malmaison, near Paris*
M. Cesar Moreau, *Elève Vice-Consul de France*
M. Marie Pierre Frederick Matthieu, *Member of the Academy of Dijon*
M. Masson Four, *Pharmacien de S.A.S.M. le Prince de Conde, Member of the Academy of Dijon*
M. de Gouvenain, *Member of the Academy of Dijon*
Thomas Fonblanque, Esq. *his Majesty's Consul, Calais, &c.*
Edward Nelson Alexander, Esq. *of Halifax, York*
The Marquis de Paroy, *Paris*

Eli Ives, M.D. *Professor of the Materia Medica and Botany at Yale College, Connecticut, United States*
Lieutenant-General Prince Volkonsky, *St. Petersburg*
Benjamin Silliman, Esq. *Professor of Chemistry, Yale College, Connecticut, United States*
Povel Lund, Esq. *Drammen, Norway*
J. Aldini, *Hon. Prof. of the University of Wilna, Member of the Imperial Institute of Milan, &c. &c.*
Mr. Benjamin Schlick, *Architect, Copenhagen*
M. Paulin Malosse, *Avignon*
Thomas Fonblanque, Esq. H.B.M. *Consul, Koeningsburg*
M. Vallot, *Sec. Academy, Dijon*
Rev. Lansdown Guilding, B.A. F.L.S. *and Member of the Geological and Wernerian Societies of Edinburgh*
William Harding Read, Esq. *Consul-General of the Azores, President at St. Michael's*
Rev. James Thomson
Captain Jose Maria Pinto, *of the Brazilian Navy, Santa Catherina D'Esterro, Brazil.*

THE END.

LONDON:
J. MOYES, TOOK'S COURT, CHANCERY LANE.